CHAPTER 2

ENGINE SYSTEM

1. FEATURE

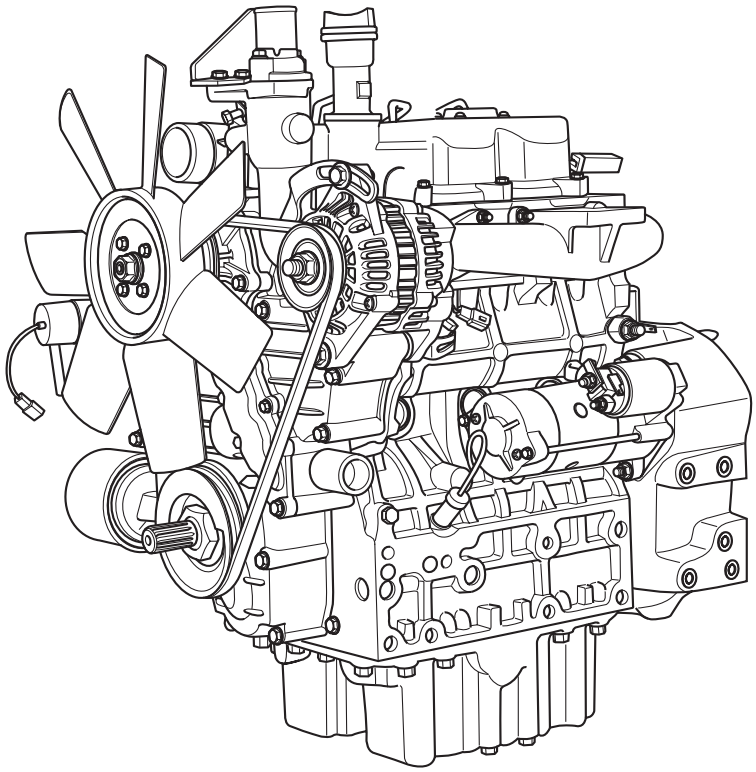

704W201A

The TD1300 and 3A150 engines are vertical, water-cooled, 4-cycle, three or four cylinders diesel engines. They concentrate DAEDONG's foremost technologies.

With swirl combustion chamber, bosch K type fuel injection pump, well-balanced designs, they feature greater power, low fuel consumption, less vibration and noise, and low emission.

2. LUBRICATING SYSTEM

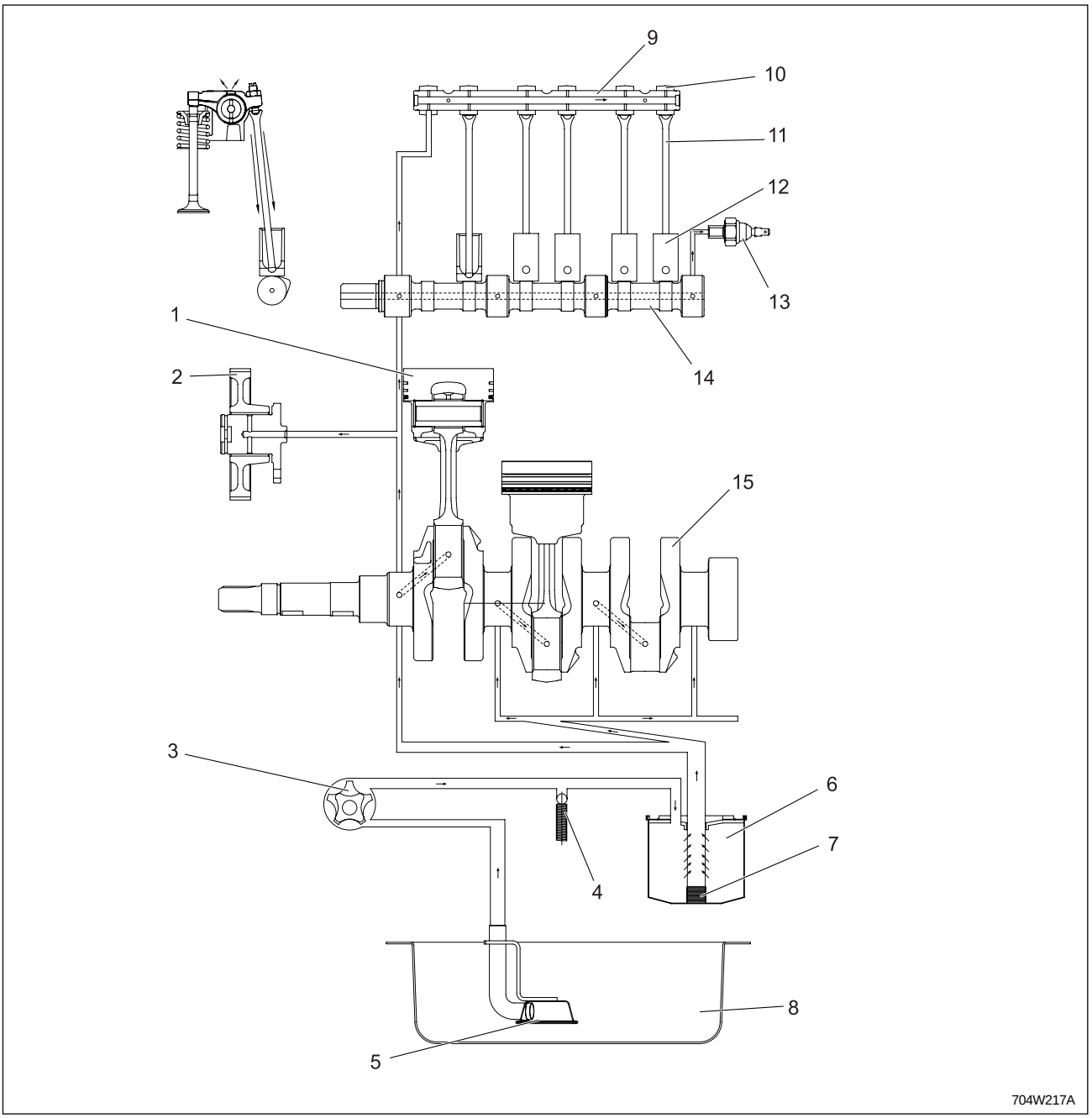

(1) Piston	(5) Strainer	(9) Rocker Arm Shaft	(13) Oil Pressure Switch
(2) Idle Gear	(6) Oil Filter Element	(10) Rocker Arm	(14) Camshaft
(3) Oil Pump	(7) Bypass Valve	(11) Push Rod	(15) Crankshaft
(4) Relief Valve	(8) Oil Pan	(12) Tappet	

The lubricating oil is forced to each journal through the oil passages of the cylinder block, cylinder head and shafts. The oil, splashed by the crankshaft or thrown off from the bearings, lubricates other engine parts such as the push rods (11), tappets (12), camshaft (14), and crankshaft (15).

3. COOLING SYSTEM

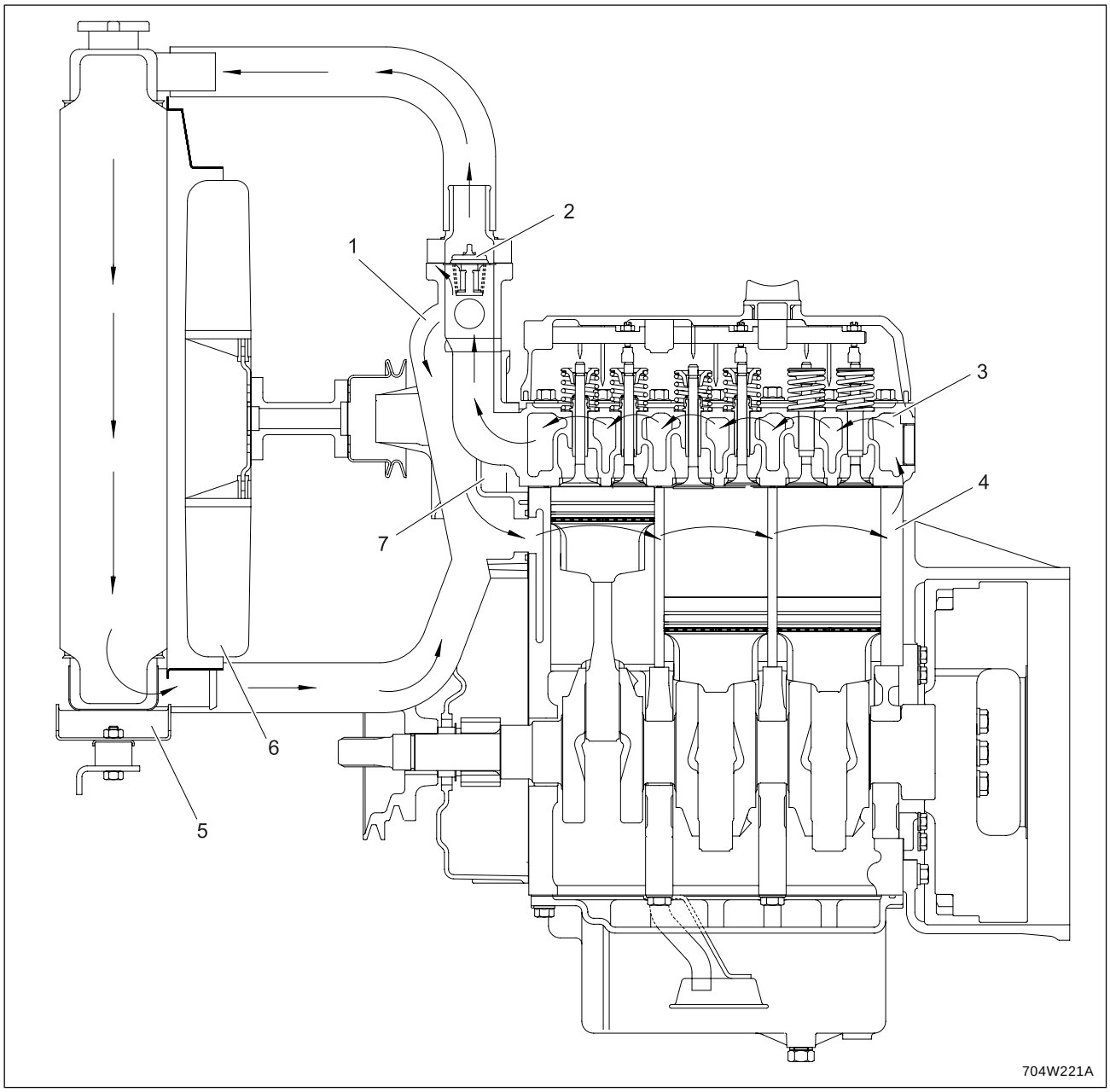

(1) Water Return Pipe
(2) Thermostat
(3) Cylinder Head Water Jacket
(4) Cylinder Block Water Jacket
(5) Radiator
(6) Cooling Fan
(7) Water Pump

The cooling system consists of a radiator (5), a centrifugal water pump (7), a cooling fan (6) and a thermostat (2). The water is cooled as it flows through the radiator core, and the fan behind the radiator pulls the cooling air through the radiator core. The water pump receives water from the radiator or from the cylinder head and forces it into cylinder block. The thermostat open or closes according to the water temperature. When the water temperature is high, the thermostat opens to allow the water to flow from the cylinder block to the radiator. When the water temperature is low, the thermostat closes and the flow stays within the block. The opening temperature of the thermostat is approx. 71 °C (160 °F).

4. FUEL SYSTEM

The fuel is fed from the fuel tank (1) through the fuel feed pump (7), through the fuel filter, and then to the injection pump (3). The injection pump force-feeds the fuel to the injection nozzles (5), which inject the fuel into the cylinders for combustion. The excess fuel from the injection pump and the injection nozzles (5), is collected in the fuel overflow pipes (6) and returns to the fuel tank.

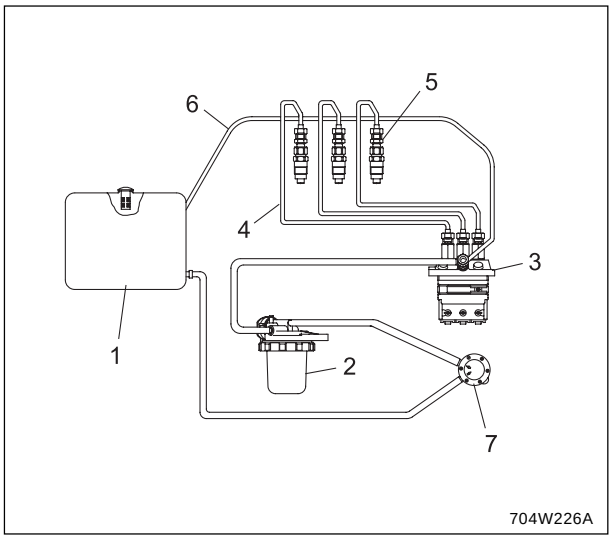

(1) Fuel Tank
(2) Fuel Filter
(3) Injection Pump
(4) Injection Pipe
(5) Injection Nozzle
(6) Fuel Overflow Pipe
(7) Fuel Feed Pump

5. TROUBLESHOOTING

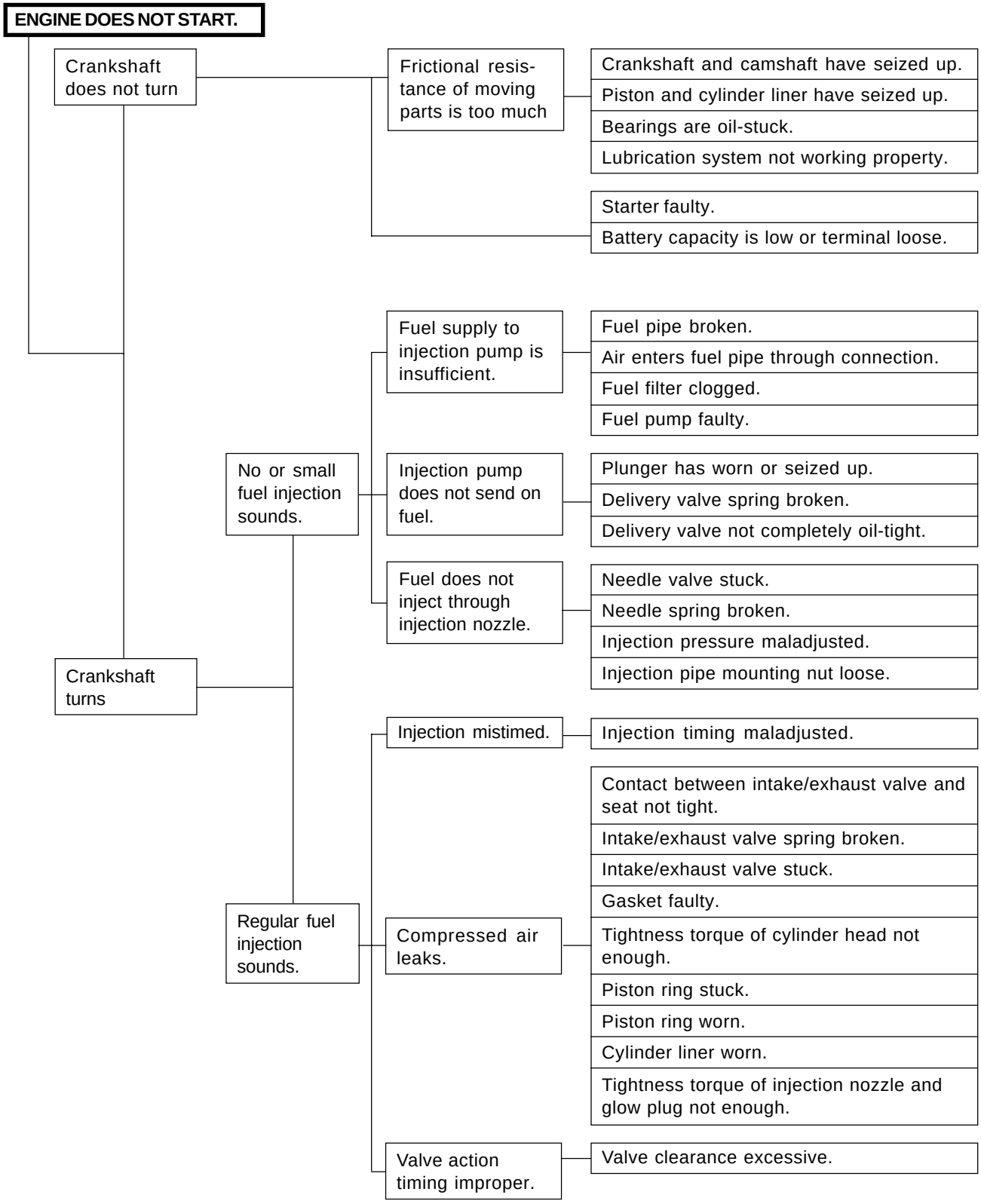

Engine does not turn normally.

- Irregular Revolution
  - Revolution is not smooth at high speeds.
    - Injection pump wrong.
      - Fuel filter clogged.
      - Fuel pipes broken or loose.
      - Air in pump.
      - Pump capacity not constant.
      - Tappet roller and pin worn.
      - Delivery valve not completely oil-tight.
    - Injection nozzle faulty.
      - Fuel leaks from nozzle tip.
      - Fuel not spraying properly.
    - Governor spring deformed.
    - Valve clearance incorrect.
  - Idling not smooth.
    - Injection pump or nozzle not functioning normally.
    - Compression pressure is different among cylinders.
    - Governor not functioning normally.
      - Governor sleeve not sliding property.
      - Fork lever not functioning normally.
      - Start spring deformed.
      - Control rack not sliding property.
    - Idling maladjusted.
      - Idling regulator maladjusted.
      - Accelerator rod maladjusted.

Engine output insufficient.

- Slow engine revolutions.
  - Main moving parts have almost seized up.
  - Engine overheated.
  - Injection mistimed.
  - Governor not functioning normally.
  - Fuel supply insufficient.
    - Filter clogged.
    - Fuel pipe broken or loose.
    - Injection pump's capacity not enough.
    - Nozzle needle valve worn.
  - Compression pressure not enough.
    - Air leaking.
    - Air cleaner clogged.

Color of exhaust fumes not normal.

- White or blue exhaust fumes.
  - Lubricant rises through piston gap.
    - Piston ring stuck.
    - Piston ring worn.
    - Excessive gap between cylinder liner and piston.
    - Too much oil.
  - Injection delayed.
  - Compression pressure insufficient.
- Black or dark gray exhaust fumes.
  - Injection mistimed.
    - Injection too early.
    - Injection delayed.
  - Fuel pump's injecting capacity varies.
    - Plunger does not return completely because spring is stuck or broken.
    - Plunger worn.
  - Nozzle does not inject fuel properly.
    - Needle valve stuck.
    - Nozzle spring broken.
    - Too much carbon sticks to nozzle tip.
    - Injection pressure too low.
  - Compressed air leaks.
  - Not enough air.

Excessive lubricant consumption.

- Excessive gap between piston and liner.
- Piston ring stuck.
- Piston ring worn.
- Excessive gap between intake/exhaust valve and valve stem.
- Valve stem seal broken.
- Oil leaks from defective packings.

Lubricant increasing.

- Fuel mixed with oil.
  - Injection pump plunger leaks much fuel.
  - Fuel pump leaks much fuel.
- Water mixed with oil.
  - Head gasket packing faulty.
  - Crankcase cracked.
- Gear oil mixed with oil.
  - Hydraulic pump's oil seal broken.

6. SERVICING SPECIFICATIONS

TD1300

A. ENGINE BODY

a. Cylinder Head

Item	Factory Specification	Allowable Limit
Cylinder Head Surface Flatness		0.05 mm / 100 mm 0.002 in. / 3.94 in.
Top Clearance	0.7 ~ 0.9 mm 0.0276 ~ 0.0354 in.	-
Thickness of gasketFree	When tightened 1.18 ~ 1.28 mm 0.0465 ~ 0.0504 in.	-
Compression Pressure (When cranking with starting motor)	3.24 ~ 3.73 MPa 33 ~ 38 kgf/cm^2 469 ~ 540 psi	2.55 MPa 26 kgf/cm^2 370 psi

* Variance of compression pressure among cylinders should be 10% or less.

b. Valves

Item		Factory Specification	Allowable Limit
Valve Clearance (Cold)	IN. EX.	0.1 mm 0.0039 in. 0.1 mm 0.0039 in.	
Valve Seat Angle	IN. EX.	0.785 rad. 45° 0.785 rad. 45°	
Valve Face Angle	IN. EX.	0.785 rad. 45° 0.785 rad. 45°	
Valve Recessing		1.1 ~ 1.3 mm 0.0433 ~ 0.0512 in.	1.6 mm 0.0630 in.
Clearance Between Valve Stem and Valve Guide		0.025 ~ 0.055 mm 0.0010 ~ 0.0022 in.	0.10 mm 0.004 in.
Valve Stem O.D		7.960 ~ 7.975 mm 0.31339 ~ 0.31398 in.	-
Valve Stem I.D		8.0 ~ 8.015 mm 0.31496 ~ 0.31555 in.	-

c. Valve Timing

Item		Factory Specification	Allowable Limit
Inlet Valve	Open Close	0.349rad 20° before T.D.C 0.785rad 45° after B.D.C	-
Exhaust Valve	Open Close	0.873rad 50° before B.D.C 0.262rad 15° after T.D.C	-

d. Cylinder Bore

Item	Factory Specification	Allowable Limit
Cylinder bore inner diameter	82.000 ~ 82.022 mm 3.2283 ~ 3.2292 in.	0.15 mm 0.0059 in.

e. Valve Spring

Item	Factory Specification	Allowable Limit
Free length	41.7 ~ 42.2 mm 1.6417 ~ 1.6614 in.	41.2 mm 1.6220 in.
Assembling load / assembling length	12.0 kgf / 35.15 mm 26.5 lbs / 1.3839 in.	10.2 kgf / 35.15 mm 22.5 lbs / 1.3839 in.
Squareness	-	1.0 mm 0.039 in.

f. Rocker Arm

Item	Factory Specification	Allowable Limit
Rocker arm shaft O.D	13.973 ~ 13.984 mm 0.55012 ~ 0.55055 in.	-
Rocker arm bushing I.D	13.998 ~ 14.023 mm 0.55110 ~ 0.55209 in.	-

g. Tappet

Item	Factory Specification	Allowable Limit
Clearance between tappet and guide	0.020 ~ 0.062 mm 0.00079 ~ 0.00244 in.	0.07 mm 0.0028 in.
Tappet O.D	23.959 ~ 23.980 mm 0.94327 ~ 0.94410 in.	-
Tappet guide I.D	24.000 ~ 24.021 mm 0.94488 ~ 0.94571 in.	-

h. Camshaft

Item		Factory Specification	Allowable Limit
Camshaft alignment		0.01 mm 0.0004 in.	0.05 mm 0.0020 in.
Cam height	IN.	33.5 ~ 33.6 mm 1.319 ~ 1.323 in.	33.45 mm 1.3169 in.
	EX.	33.5 ~ 33.6 mm 1.319 ~ 1.323 in.	33.45 mm 1.3169 in.
Clearance between camshaft		0.050 ~ 0.091 mm 0.00197 ~ 0.00358 in.	0.15 mm 0.0059 in.
Camshaft journal O.D		39.934 ~ 39.950 mm 1.57221 ~ 1.57284 in.	39.88 mm 1.5701 in.
Camshaft counter bore I.D		40.000 ~ 40.025 mm 1.57480 ~ 1.57579 in.	-

I. Timing Gear

Item		Factory Specification	Allowable Limit
Timing gear backlash		0.04 ~ 0.11 mm 0.0016 ~ 0.0043 in.	0.15 mm 0.0059 in.
Idle gear side clearance		0.20 ~ 0.51 mm 0.0079 ~ 0.0201 in.	0.9 mm 0.035 in.
Clearance between	Idle gear shaft and idle gear bushing	0.020 ~ 0.054 mm 0.00079 ~ 0.00213 in.	0.1 mm 0.0039 in.
	Idle gear shaft O.D	27.967 ~ 27.980 mm 1.10106 ~ 1.10157 in.	-
	Idle gear bushing I.D	28.000 ~ 28.021 mm 1.10236 ~ 1.10319 in.	-

j. Piston Ring

Item		Factory Specification	Allowable Limit
Piston pin-bore I.D		23.00 ~ 23.013 mm 0.90551 ~ 0.90602 in.	23.053 mm 0.9076 in.
Clearance between	Oil ring and ring groove	0.020 ~ 0.060 mm 0.00079 ~ 0.00236 in.	0.15 mm 0.0059 in.
	Oil ring groove width	5.01 ~ 5.03 mm 0.19724 ~ 0.19803 in.	-
	Oil ring width	4.97 ~ 4.99 mm 0.19567 ~ 0.19646 in.	-
Clearance between	2nd ring and ring groove	0.065 ~ 0.100 mm 0.00256 ~ 0.00394 in.	0.15 mm 0.0059 in.
	2nd ring groove width	2.055 ~ 2.070 mm 0.08091 ~ 0.08150 in.	-
	2nd ring width	1.97 ~ 1.99 mm 0.07756 ~ 0.07834 in.	-
Top ring, oil ring end gap		0.25 ~ 0.40 mm 0.0098 ~ 0.01570 in.	1.25 mm 0.0492 in.
2nd ring end gap		0.25 ~ 0.40 mm 0.0098 ~ 0.01570 in.	1.25 mm 0.0492 in.

k. Connecting Rod

Item		Factory Specification	Allowable Limit
Connecting rod alignment		-	0.05 mm 0.0020 in.
Clearance between	Piston and small end bushing	0.014 ~ 0.038 mm 0.00055 ~ 0.00150 in.	0.15 mm 0.0059 in.
	Piston pin O.D	23.002 ~ 23.011 mm 0.90560 ~ 0.90594 in.	-
	Small end bushing I.D	23.025 ~ 23.040 mm 0.90650 ~ 0.90708 in.	-

I. Crankshaft

Item		Factory Specification	Allowable Limit
Crankshaft alignment		-	0.08 mm 0.0031 in.
Clearance between	Crankshaft and crankshaft bearing 1	0.040 ~ 0.118 mm 0.00157 ~ 0.00465 in.	0.20 mm 0.0079 in.
	Crankshaft O.D	51.921 ~ 51.940 mm 2.04414 ~ 2.04488 in.	-
	Crankshaft bearing 1 I.D	51.980 ~ 52.039 mm 2.04646 ~ 2.04878 in.	-
Clearance between	Crankshaft and crankshaft bearing 2	0.040 ~ 0.104 mm 0.00157 ~ 0.00409 in.	0.20 mm 0.0079 in.
	Crankshaft O.D	51.921 ~ 51.940 mm 2.04414 ~ 2.04488 in.	-
	Crankshaft bearing 2 I.D	51.980 ~ 52.025 mm 2.04646 ~ 2.04823 in.	-
Clearance between	Crank pin and Crank pin bearing	0.035 ~ 0.093 mm 0.0014 ~ 0.0037 in.	0.20 mm 0.0079 in.
	Crank pin O.D	43.959 ~ 43.975 mm 1.73067 ~ 1.73130 in.	-
	Crank pin bearing I.D	44.010 ~ 44.052 mm 1.73268 ~ 1.73433 in.	-
Crankshaft side clearance		0.15 ~ 0.31 mm 0.0059 ~ 0.0122 in.	0.5 mm 0.020 in.

B. LUBRICATING SYSTEM

a. Oil Pump

Item		Factory Specification	Allowable Limit
Engine oil pressure (oil temp. 85 ~ 95 °C, 185 ~ 203 °F)	At idle speed	more than 68.6 kPa 0.7 kgf/cm^2 9.95 psi	-
	At rated speed	294.2 ~ 441 kPa 3.0 ~ 4.5 kgf/cm^2 42.7 ~ 64.0 psi	294.2 kPa 3.0 kgf/cm^2 42.7 psi
Clearance between inner rotor and outer rotor		0.10 ~ 0.16 mm 0.0039 ~ 0.0063 in.	0.2 mm 0.0079 in.
Radial clearance between outer rotor and pump		0.11 ~ 0.19 mm 0.0043 ~ 0.0078 in.	0.25 mm 0.0098 in.
End clearance between inner rotor and cover		0.105 ~ 0.150 mm 0.00413 ~ 0.00591 in.	0.2 mm 0.00787 in.

C. COOLING SYSTEM

a. Thermostat

Valve opening temperature at beginning	69.5 ~ 72.5 °C (157.1 ~ 162.5 °F)
Opened completely (height 8 mm 0.315 in.)	85 °C (185 °F)

b. Radiator

Radiator tightness	No leak at 137 kPa, 1.4 kgf/cm^2, 20 psi
Radiator cap tightness	10 seconds or more for pressure falling from 88 ~ 59 kPa from 0.9 ~ 0.6 kgf/cm^2 from 13 ~ 9 psi
Fan belt tension [deflection at 78 N (8 kgf, 18 lbs) of force]	7 ~ 9 mm 0.28 ~ 0.35 in.

D. FUEL SYSTEM

a. Inject Pump

Injection timing (BTDC)	20°

b. Injection Nozzle

Fuel injection pressure	14.709 MPa 150 kgf/cm^2 2,134 psi
Fuel tightness of nozzle valve seat	No fuel leak for 5 sec. at pressure 12.75 MPa 130 kgf/cm^2 1,849 psi

NOTE:

- *Injection Sequence*
  Three Cylinders: 1 → 2 → 3
  (The cylinder number is given in order from the gear case end.)

E. TIGHTENING TORQUES

Item	Size x Pitch	N•m	kgf•m	lbf·ft
Cylinder head screws	M11 x 1.25	103.0 ~ 107.9	10.5 ~ 11.0	75.9 ~ 79.6
Head cover bolts	M6 x 1.0	8.8 ~ 11.8	0.9 ~ 1.2	6.5 ~ 8.7
* Bearing case screw 1	M9 x 1.25	46.1 ~ 51.0	4.7 ~ 5.2	34.0 ~ 37.6
* Bearing case screw 2	M10 x 1.25	68.6 ~ 73.6	7.0 ~ 7.5	50.6 ~ 54.2
* Flywheel screw	M12 x 1.25	98.1 ~ 107.9	10.0 ~ 11.0	72.3 ~ 79.6
* Connecting rod screws	M8 x 1.0	46.1 ~ 51.0	4.5 ~ 5.0	34.0 ~ 37.6
Rocker arm support bolts	M10 x 1.25	68.0 ~ 70.6	6.2 ~ 7.2	44.8 ~ 52.1
Drain plug	M12 x 1.25	32.4 ~ 37.3	3.3 ~ 3.8	23.9 ~ 37.3
Glow plugs	M10 x 1.25	19.6 ~ 24.5	2.0 ~ 2.5	14.5 ~ 18.1
Oil switch	PT1/8	14.7 ~ 19.6	1.5 ~ 2.0	10.8 ~ 14.5
Nozzle locating screws	M20 x 1.5	49.1 ~ 68.7	5.0 ~ 7.0	36.2 ~ 50.6
Injection pipe nuts	M12 x 1.5	24.5 ~ 34.3	2.5 ~ 3.5	18.1 ~ 25.3

NOTE:

- *For *marked screw, bolts and nuts on the table, apply engine oil to their threads and seats before tightening.*
- *The letter "M" in Size x Pitch means that the screw, bolt or nut dimension stands for metric. The size is the nominal outside diameter in mm of the threads. The pitch is the nominal distance in mm between two threads.*

3A150

F. ENGINE BODY

a. Cylinder Head

Item	Factory Specification	Allowable Limit
Cylinder Head Surface Flatness		0.05 mm / 100 mm 0.002 in. / 3.94 in.
Top Clearance	0.750 ~ 0.9 mm 0.0294 ~ 0.0354 in.	-
Thickness of gasketFree	When tightened 1.17 ~ 1.26 mm 0.0466 ~ 0.0496 in.	-
Compression Pressure (When cranking with starting motor)	3.24 ~ 3.73 MPa 33 ~ 38 kgf/cm^2 469 ~ 540 psi	2.55 MPa 26 kgf/cm^2 370 psi

* Variance of compression pressure among cylinders should be 10% or less.

b. Valves

Item		Factory Specification	Allowable Limit
Valve Clearance (Cold)	IN. EX.	0.25 mm 0.0098 in. 0.30 mm 0.0118 in.	
Valve Seat Angle	IN. EX.	0.785 rad. 45° 0.785 rad. 45°	
Valve Face Angle	IN. EX.	0.785 rad. 45° 0.785 rad. 45°	
Valve Recessing		0.2 ~ 0.5 mm 0.0079 ~ 0.0197 in.	0.8 mm 0.0315 in.
Clearance Between Valve Stem and Valve Guide		0.040 ~ 0.070 mm 0.0016 ~ 0.0028 in.	0.10 mm 0.0039 in.
Valve Stem O.D		7.960 ~ 7.975 mm 0.31339 ~ 0.31398 in.	-
Valve Stem I.D		8.015 ~ 8.030 mm 0.3156 ~ 0.3161 in.	-

c. Valve Timing

Item		Factory Specification	Allowable Limit
Inlet Valve	Open Close	0.14rad 8° before T.D.C 0.611rad 35° after B.D.C	-
Exhaust Valve	Open Close	0.785rad 45° before B.D.C 0.140rad 8° after T.D.C	-

d. Cylinder Bore

Item	Factory Specification	Allowable Limit
Cylinder bore inner diameter	83.000 ~ 83.022 mm 3.2677 ~ 3.2690 in.	0.15 mm 0.0059 in.

e. Valve Spring

Item	Factory Specification	Allowable Limit
Free length	41.7 ~ 42.2 mm 1.6417 ~ 1.6614 in.	41.2 mm 1.6220 in.
Assembling load / assembling length	12.0 kgf / 35.15 mm 26.5 lbs / 1.3839 in.	10.2 kgf / 35.15 mm 22.5 lbs / 1.3839 in.
Squareness	-	1.0 mm 0.039 in.

f. Rocker Arm

Item	Factory Specification	Allowable Limit
Rocker arm shaft O.D	18.955 ~ 18.980 mm 0.7463 ~ 0.7472 in.	-
Rocker arm bushing I.D	19.000 ~ 19.025 mm 0.7480 ~ 0.7490 in.	-

g. Tappet

Item	Factory Specification	Allowable Limit
Clearance between tappet and guide	0.020 ~ 0.062 mm 0.00079 ~ 0.00244 in.	0.07 mm 0.0028 in.
Tappet O.D	23.959 ~ 23.980 mm 0.94327 ~ 0.94410 in.	-
Tappet guide I.D	24.000 ~ 24.021 mm 0.94488 ~ 0.94571 in.	-

h. Camshaft

Item		Factory Specification	Allowable Limit
Camshaft alignment		0.01 mm 0.0004 in.	0.05 mm 0.0020 in.
Cam height	IN.	33.9 mm 1.3224 in.	33.54 mm 1.3205 in.
	EX.	33.69 mm 1.326 in.	33.64 mm 1.3244 in.
Clearance between camshaft		0.050 ~ 0.091 mm 0.00197 ~ 0.00358 in.	0.15 mm 0.0059 in.
Camshaft journal O.D		39.934 ~ 39.950 mm 1.57220 ~ 1.57283 in.	39.88 mm 1.5701 in.
Camshaft counter bore I.D		40.000 ~ 40.025 mm 1.57480 ~ 1.57579 in.	-

I. Timing Gear

Item		Factory Specification	Allowable Limit
Timing gear backlash		0.04 ~ 0.11 mm 0.0016 ~ 0.0043 in.	0.15 mm 0.0059 in.
Idle gear side clearance		0.20 ~ 0.51 mm 0.0079 ~ 0.0201 in.	0.9 mm 0.035 in.
Clearance between	Idle gear shaft and idle gear bushing	0.025 ~ 0.066 mm 0.00098 ~ 0.00250 in.	0.1 mm 0.0039 in.
	Idle gear shaft O.D	37.9590 ~ 37.9950 mm 1.49445 ~ 1.49508 in.	-
	Idle gear bushing I.D	38.000 ~ 38.025 mm 1.49608 ~ 1.49705 in.	-

j. Piston Ring

Item		Factory Specification	Allowable Limit
Piston pin-bore I.D		25.00 ~ 25.006 mm 0.98425 ~ 0.98448 in.	25.03 mm 0.9854 in.
Clearance between	Oil ring and ring groove	0.020 ~ 0.060 mm 0.00079 ~ 0.00236 in.	0.15 mm 0.0059 in.
	Oil ring groove width	5.01 ~ 5.03 mm 0.19724 ~ 0.19803 in.	-
	Oil ring width	5.97 ~ 5.99 mm 0.23504 ~ 0.23583 in.	-
Clearance between	2nd ring and ring groove	0.065 ~ 0.100 mm 0.00256 ~ 0.00394 in.	0.15 mm 0.0059 in.
	2nd ring groove width	2.055 ~ 2.070 mm 0.08091 ~ 0.08150 in.	-
	2nd ring width	1.97 ~ 1.99 mm 0.07756 ~ 0.07834 in.	-
Top ring, oil ring end gap		0.25 ~ 0.40 mm 0.0098 ~ 0.01570 in.	1.25 mm 0.0492 in.
2nd ring end gap		0.25 ~ 0.40 mm 0.0098 ~ 0.01570 in.	1.25 mm 0.0492 in.

k. Connecting Rod

Item		Factory Specification	Allowable Limit
Connecting rod alignment		-	0.05 mm 0.0020 in.
Clearance between	Piston and small end bushing	0.014 ~ 0.038 mm 0.00055 ~ 0.00150 in.	0.15 mm 0.0059 in.
	Piston pin O.D	25.002 ~ 25.011 mm 0.98433 ~ 0.98469 in.	-
	Small end bushing I.D	25.025 ~ 25.040 mm 0.98524 ~ 0.98583 in.	-

I. Crankshaft

Item		Factory Specification	Allowable Limit
Crankshaft alignment		-	0.08 mm 0.0031 in.
Clearance between	Crankshaft and crankshaft bearing 1	0.040 ~ 0.118 mm 0.00157 ~ 0.00465 in.	0.20 mm 0.0079 in.
	Crankshaft O.D	51.921 ~ 51.940 mm 2.04414 ~ 2.04488 in.	-
	Crankshaft bearing 1 I.D	51.980 ~ 52.039 mm 2.04646 ~ 2.04878 in.	-
Clearance between	Crankshaft and crankshaft bearing 2	0.040 ~ 0.104 mm 0.00157 ~ 0.00409 in.	0.20 mm 0.0079 in.
	Crankshaft O.D	51.921 ~ 51.940 mm 2.04414 ~ 2.04488 in.	-
	Crankshaft bearing 2 I.D	51.980 ~ 52.025 mm 2.04646 ~ 2.04823 in.	-
Clearance between	Crank pin and Crank pin bearing 2	0.035 ~ 0.093 mm 0.0014 ~ 0.0037 in.	0.20 mm 0.0079 in.
	Crank pin O.D	43.959 ~ 43.975 mm 1.73067 ~ 1.73130 in.	-
	Crank pin bearing I.D	44.010 ~ 44.052 mm 1.73268 ~ 1.73433 in.	-
Crankshaft side clearance		0.15 ~ 0.31 mm 0.0059 ~ 0.0122 in.	0.5 mm 0.020 in.

G. LUBRICATING SYSTEM

a. Oil Pump

Item		Factory Specification	Allowable Limit
Engine oil pressure (oil temp. 85 ~ 95 °C, 185 ~ 203 °F)	At idle speed	more than 68.6 kPa 0.7 kgf/cm^2 9.95.11 psi	-
	At rated speed	245.1 kPa 2.5 kgf/cm^2 35.5 psi	294.2 kPa 3.0 kgf/cm^2 42.7 psi
Clearance between inner rotor and outer rotor		0.10 ~ 0.16 mm 0.0039 ~ 0.0063 in.	0.2 mm 0.0079 in.
Radial clearance between outer rotor and pump		0.11 ~ 0.19 mm 0.0043 ~ 0.0078 in.	0.25 mm 0.0098 in.
End clearance between inner rotor and cover		0.105 ~ 0.150 mm 0.00413 ~ 0.00591 in.	0.2 mm 0.00787 in.

H. COOLING SYSTEM

a. Thermostat

Valve opening temperature at beginning	69.5 ~ 72.5 °C (157.1 ~ 162.5 °F)
Opened completely (height 8 mm 0.315 in.)	85 °C (185 °F)

b. Radiator

Radiator tightness	No leak at 137 kPa, 1.4 kgf/cm^2, 20 psi
Radiator cap tightness	10 seconds or more for pressure falling from 88 ~ 59 kPa from 0.9 ~ 0.6 kgf/cm^2 from 13 ~ 9 psi
Fan belt tension [deflection at 78 N (8 kgf, 18 lbs) of force]	7 ~ 9 mm 0.28 ~ 0.35 in.

I. FUEL SYSTEM

a. Inject Pump

Injection timing (BTDC)	18°

b. Injection Nozzle

Fuel injection pressure	14.709 MPa 150 kgf/cm^2 2,134 psi
Fuel tightness of nozzle valve seat	No fuel leak for 5 sec. at pressure 12.75 MPa 130 kgf/cm^2 1,849 psi

NOTE:

- *Injection Sequence*
  Three Cylinders: 1 → 2 → 3
  (The cylinder number is given in order from the gear case end.)

J. TIGHTENING TORQUES

Item	Size x Pitch	N•m	kgf•m	lbf·ft
Cylinder head screws	M11 x 1.25	103.0 ~ 107.9	10.5 ~ 11.0	75.9 ~ 79.6
Head cover bolts	M8 x 1.0	8.8 ~ 11.8	0.9 ~ 1.2	6.5 ~ 8.7
* Bearing case screw 1	M9 x 1.25	46.1 ~ 51.0	4.7 ~ 5.2	34.0 ~ 37.6
* Bearing case screw 2	M10 x 1.25	68.6 ~ 73.6	7.0 ~ 7.5	50.6 ~ 54.2
* Flywheel screw	M12 x 1.25	98.1 ~ 107.9	10.0 ~ 11.0	72.3 ~ 79.6
* Connecting rod screws	M8 x 1.0	46.1 ~ 51.0	4.5 ~ 5.0	34.0 ~ 37.6
Rocker arm support bolts	M10 x 1.25	60.8 ~ 70.6	6.2 ~ 7.2	44.8 ~ 52.1
Drain plug	M12 x 1.25	32.4 ~ 37.3	3.3 ~ 3.8	23.9 ~ 37.3
Glow plugs	M10 x 1.25	19.6 ~ 24.5	2.0 ~ 2.5	14.5 ~ 18.1
Oil switch	PT1/8	14.7 ~ 19.6	1.5 ~ 2.0	10.8 ~ 14.5
Nozzle locating screws	M20 x 1.5	49.1 ~ 68.7	5.0 ~ 7.0	36.2 ~ 50.6
Injection pipe nuts	M12 x 1.5	24.5 ~ 34.3	2.5 ~ 3.5	18.1 ~ 25.3

NOTE:

- *For *marked screw, bolts and nuts on the table, apply engine oil to their threads and seats before tightening.*
- *The letter "M" in Size x Pitch means that the screw, bolt or nut dimension stands for metric. The size is the nominal outside diameter in mm of the threads. The pitch is the nominal distance in mm between two threads.*

7. DISASSEMBLING AND MAINTENANCE

7.1 DISASSEMBLING ENGINE

A. DRAINING THE ENGINE OIL

CAUTION

To avoid personal injury:

- ***Be sure to stop the engine before changing the oil.***
- ***Allow engine to cool down sufficiently, oil can be hot and can burn.***

1. To drain the used oil, remove the drain plug at the bottom of the engine and drain the oil completely into the oil pan.

   All the used oil can be drained out easily when the engine is still warm.
2. After draining reinstall the drain plug.
3. Fill with the new oil up to the upper notch on the dipstick.

Oil capacity with filter	CH25(H)	5.8ℓ (1.53 U.S.gal.)
	CK30(H)	

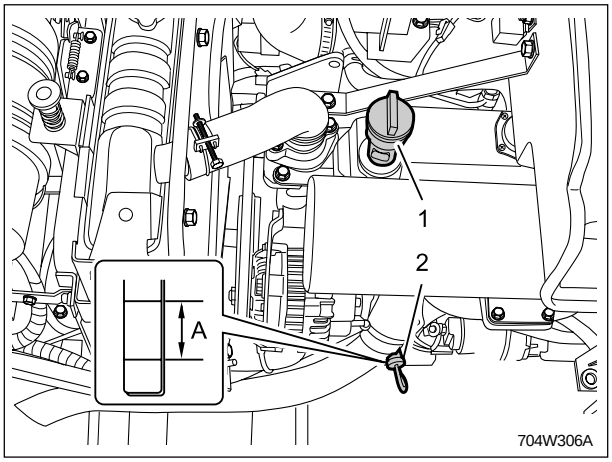

(1) Oil Inlet

(2) Dipstick

(A) Oil Level is Acceptable Within this Range

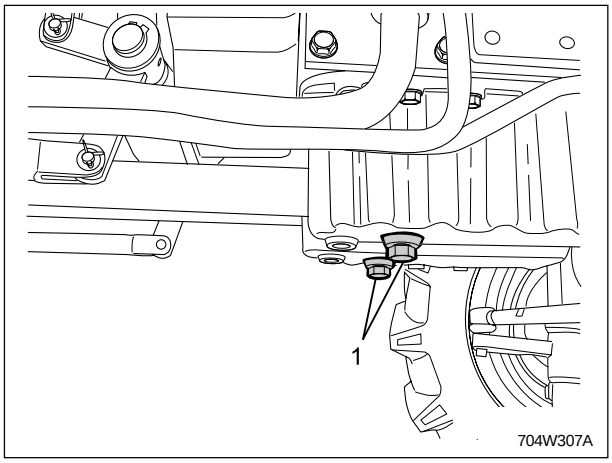

(1) Drain Plug

B. DRAINING THE COOLANT

CAUTION

- ***Never open radiator cap when the coolant's temprature reaches boiling point.***
- ***Do not remove the radiator cap when the engine is hot. Then loosen cap slightly to the stop. Relieve any excess pressure before removing cap completely.***

1. Stop the engine and let it cool down.
2. After open the bonnet
3. To drain the coolant, open the radiator drain plug and remove radiator cap. The radiator cap must be removed to completely drain the coolant.
4. After all coolant is drained, close the drain plug.

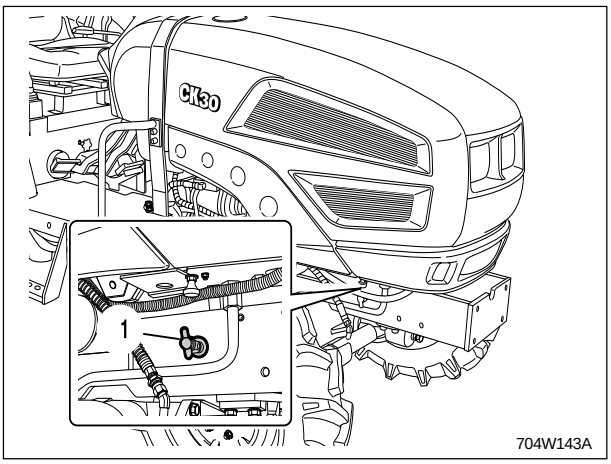

(1) Drain Plug

(Filling)

- Fill water up the point between "Full" and "Low" mark on the recovery water tank.

Coolant capacity	CK25	7.4 ℓ (2.0 U.S.gal.)
	CK30	7.8 ℓ (2.1 U.S.gal.)

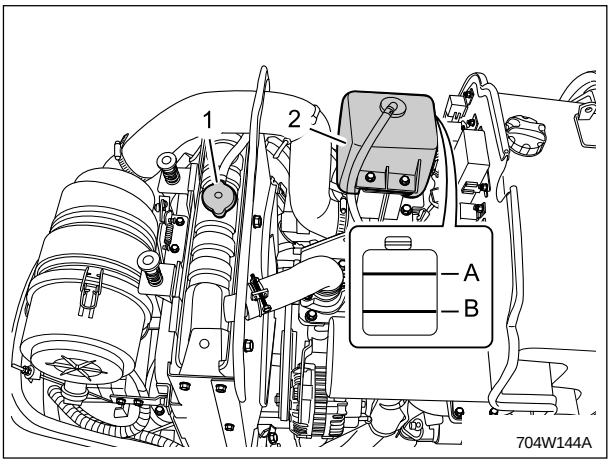

(1) Radiator Cap
(2) Recovery Tank
(A) FULL
(B) LOW

C. BONNET

1. Open the bonnet (1) and disconnect the electronic connector (2).
2. Remove the air-cylinder (3).
3. Remove the snap-pin, joint-pin and bonnet(1).
4. Remove the side cover (LH/RH) (4).
5. Disconnect the battery terminal (-) (5).

NOTE:

- *When disconnecting the battery cords, disconnect the (-) cord first. Connecting, (+) cable first.*

(For assembly)

After connecting the battery terminal (-), apply a little grease to it.

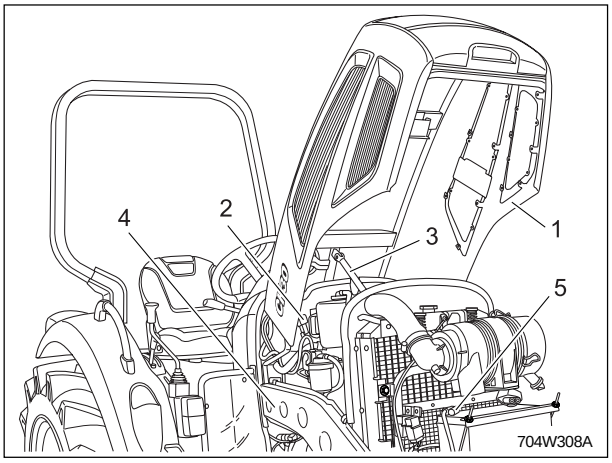

(1) Bonnet
(2) Connector
(3) Air-cylinder
(4) Side Cover
(5) Battery terminal (-)

D. HYDRAULIC PIPE AND ELECTRIC WIRING

1. Remove the engine stop wire.(1)
2. Remove the steering hoses(R, P, T).(2, 3, 4).
3. Remove the accelerator wires (hand, pedal).(5, 6)
4. Disconnect the bonnet wire harness 2 Assy.
5. Remove the rubber pipe 1 (7) out of suction pipe 3 (8).
6. Remove the hydraulic pipe (B1).(9)
7. Remove the cooling pipe 3 (HST type)
8. Remove the steering hose (L).(10)
9. Remove the cooling pipe 4 (HST type)
10. Disconnect the bonnet wire harness 1 Assy.(11)

(When reassembling)

- A hose classification
  - Steering hose P : A red tag attachment
  - Steering hose R : A white tag attachment
  - Steering hose L : A yellow tag attachment
  - Steering hose T : No tag

Item	Tightening torque
Steering hose P, R, L	9.8 N·m 1.0 kgf·m 7.2 lb·ft
Pipe bed	9.8 N·m 1.0 kgf·m 7.2 lb·ft

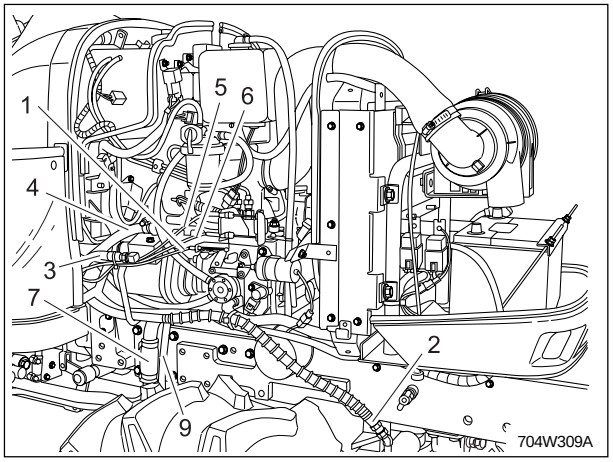

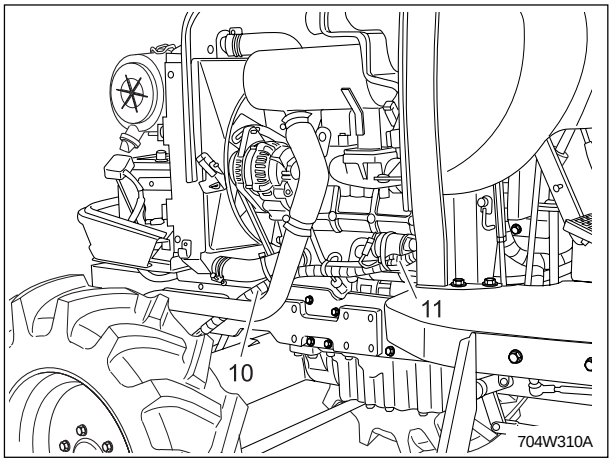

(1) Engine stop wire
(2) Steering hose (R)
(3) Steering hose (P)
(4) Steering hose (T)
(5) Accelerator wire(hand)
(6) Accelerator wire(pedal)
(7) Rubber pipe
(8) Suction pipe 3
(9) Hydraulic pipe (B1)
(10) Steering hose (L)
(11) Bonnet wire harness 1 Assy

E. PROPELLER SHAFT

1. Remove the bolts and slide the propeller shaft cover .
2. Tap out the spring pin (8), and then slide the coupling (2) to the rear.
3. Romove the propeller shaft and cover.

(When reassembling)

- Apply grease to the splines of the propeller shaft.

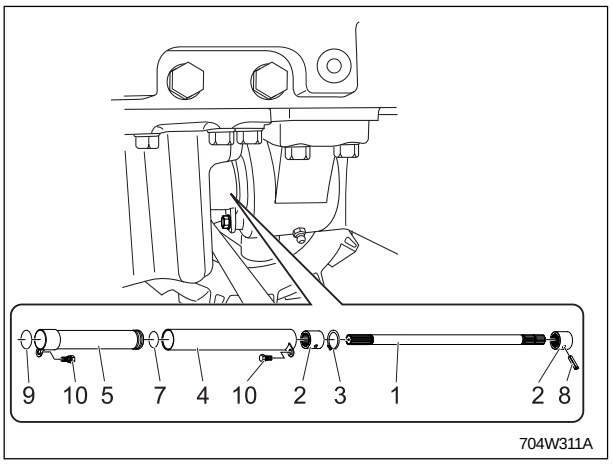

(1) Propeller Shaft
(2) Coupling
(3) Cir-Clip
(4) Propeller Shaft Cover 1
(5) Propeller Shaft Cover 2
(6) O-Ring
(7) O-Ring
(8) Spring Pin
(9) O-Ring
(10) Bolt

F. SEPARATING ENGINE & CLUTCH HOUSING

1. Place the jacket to the bottom of the clutch housing and engine.
2. Remove the mounting bolts for the fuel tank support.
3. Separate engine and clutch housing.

(When reassembling)

- Apply grease to the spline of main shaft.
- Apply liquid gasket (Three Bond 1,211 or equivalent) to the joint face of the flywheel housing and clutch housing.

Item	Tightening torque
Bolts, nuts	48.1 ~ 55.9 N·m 4.9 ~ 5.7 kgf·m 1.004 ~ 1.167 lb·ft
Stud Bolts	24.5 ~ 31.4 N·m 2.5 ~ 3.2 kgf·m 0.512 ~ 0.655 lb·ft

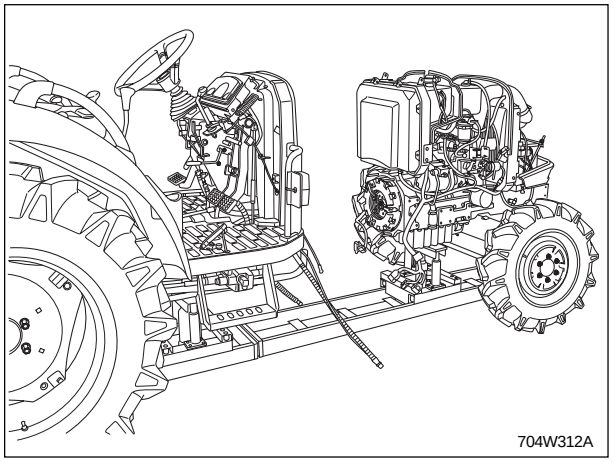

G. REMOVING CLUTCH

1. Put alignment marks on the clutch cover and fly wheel. (CK25/30)
2. Insert the clutch center tool.
3. Remove the clutch assembly.

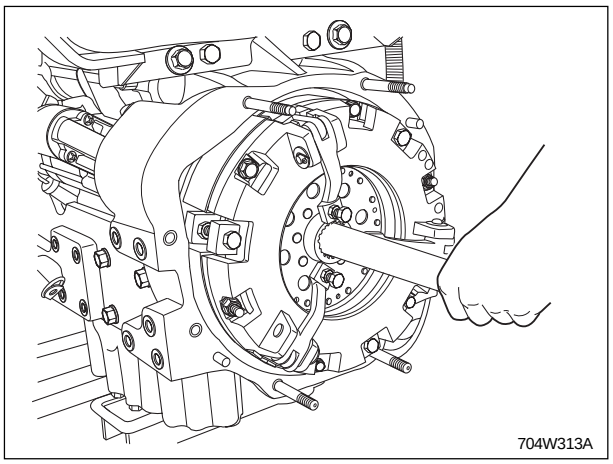

H. SEPARATING THE FUEL TANK

1. Remove the bonnet wire-harness1(1).
2. Remove the air cleaner(2).
3. Remove the reovery tank(3).
4. Loosen bolts and remove the fuel tank(4).
5. Remove the muftler(5).
6. Remove the bonnet wire harness2(6).
7. Remove the water pipe(7, 8)

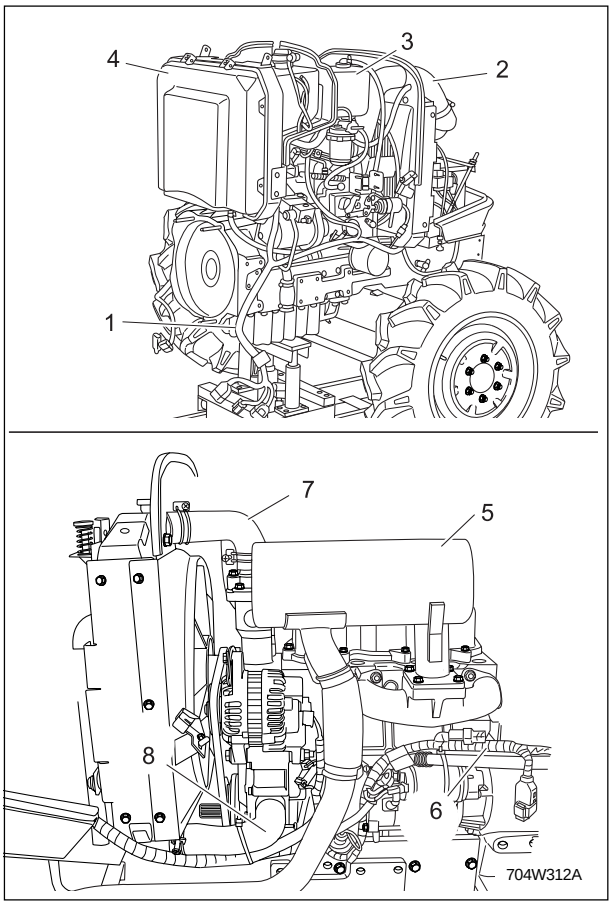

(1) Bonnet Wire Harness 1
(2) Airr Cleaner
(3) Recovery Tank
(4) Fuel Tank
(5) Muftler
(6) Bonnet Wire Harness2
(7) Water Pipe(Upper)
(8) Water Pipe(Lower)

I. DISASSEMBLING FRONT AXLE FRAME

1. Lift engine with chain hook and support it.
2. Loosen bolts and remove the engine from the front axle frame.

Item	Tightening torque
M10 Bolt (Only CK30)	60.9 ~ 70.6 N·m 6.2 ~ 7.2 kgf·m 44.9 ~ 52.0 lb·ft
M12 Bolts	103 ~ 117 N·m 10.5 ~ 12.0 kgf·m 76.0 ~ 86.7 lb·ft

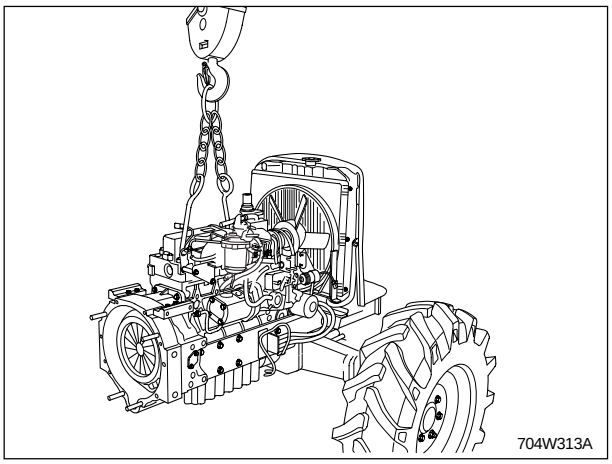

J. DISASSEMBLING OTHER ENGINE PARTS.

1. Remove the gear pump assy(1) and pump holder.
2. Remove the fan belt(2), cooling fan(3) and fan pulley.
3. Remove the dynamo assy(4).
4. Remove the start motor(5).

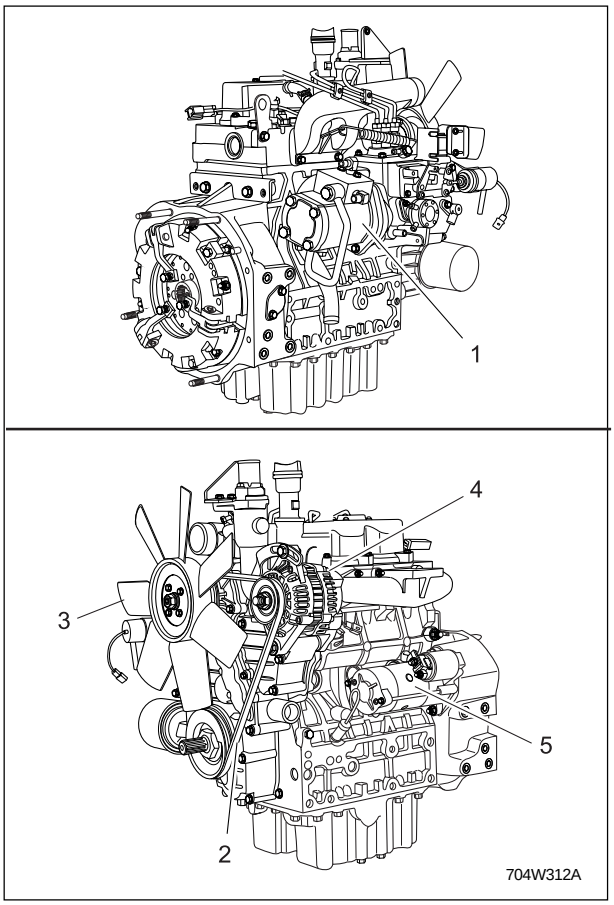

(1) Gear Pump
(2) Fan Belt
(3) Cooling Fan
(4) Dynamo Assy
(5) Starter Motor

7.2. ENGINE DISASSEMBLED VIEW

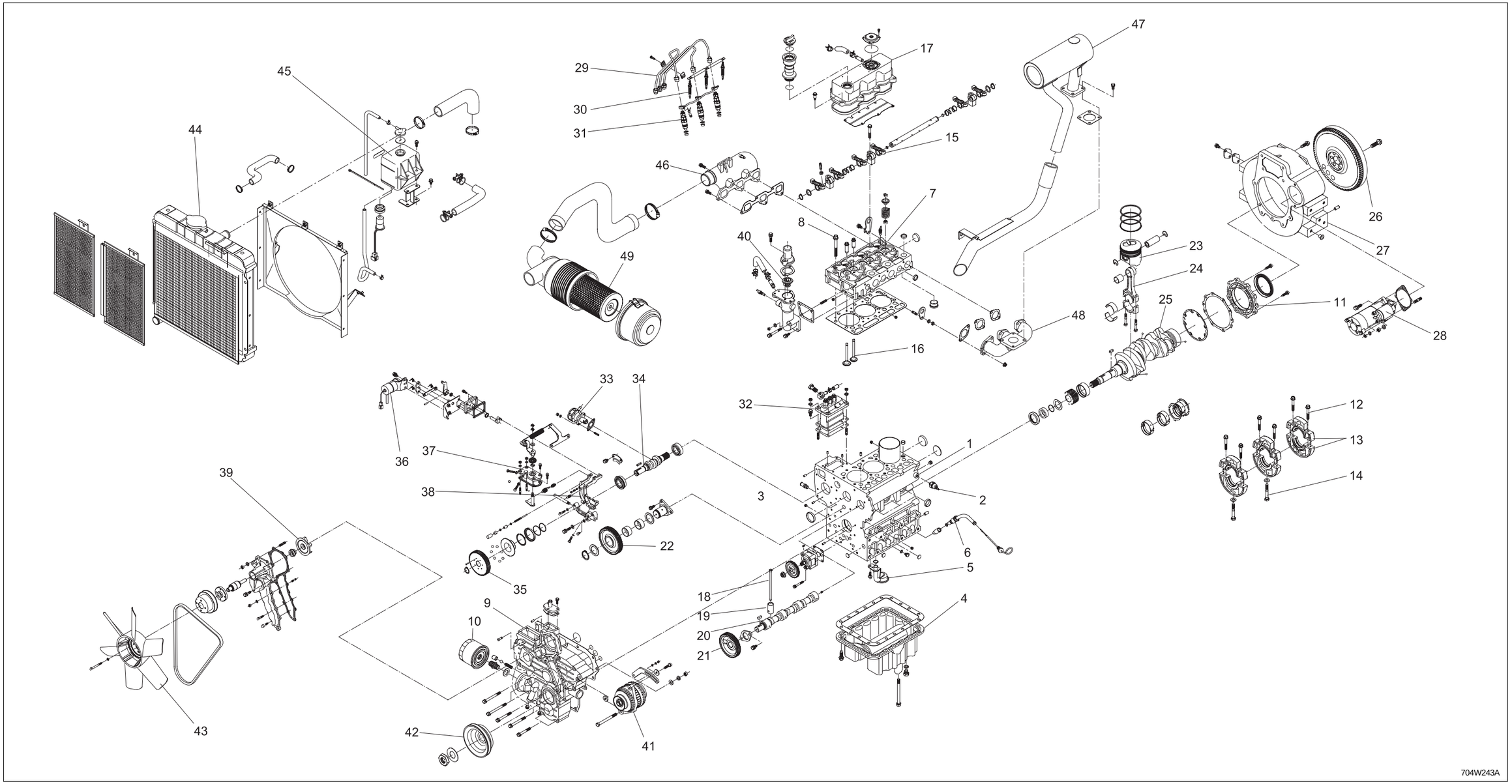

(1) Cylinder Block
(2) Oil Pressure Switch
(3) Oil Pump
(4) Oil Pan
(5) Oil Strainer
(6) Oil Gauge
(7) Cylinder Head
(8) Head Bolt
(9) Gear case
(10) Oil Filter
(11) Main bearing Case Cover
(12) Bearing Case Bolt 1
(13) Main Bearing Case
(14) Bearing Case Bolt 2
(15) Rocker Arm
(16) Inlet, Exhaust Valve
(17) Cylinder Hear Cover
(18) Push Rod
(19) Tappet
(20) Camshaft
(21) Camshaft Gear
(22) Idle Gear
(23) Piston
(24) Connecting Rod
(25) Crankshaft
(26) Flywheel
(27) Flywheel Housing
(28) Starter
(29) Injection Pipe
(30) Glow Plug
(31) Nozzle
(32) Fuel Injection Pump
(33) Fuel Feed Pump
(34) Fuel Camshaft
(35) Fuel Camshaft Gear
(36) Engine Stop Solenoid
(37) Speed Control Plate
(38) Fork Lever (Governor)
(39) Impeller
(40) Thermostat
(41) Alternator
(42) Fan Drive Pulley
(43) Cooling Fan
(44) Radiator
(45) Reserve Tank Ass'y
(46) Inlet Manifold
(47) Muffler
(48) Exhaust Manifold
(49) Air Cleaner

7.3 ENGINE BODY

A. CHECKING AND ADJUSTING

a. Compression pressure

1. Run the engine until warmed up.
2. Stop the engine and remove the air cleaner, the muffler and all nozzle holders.
3. Connect a compression tester to the nozzle holder hole.
4. Pull the stop lever to cut the fuel and run the engine with the starter at 250 ~ 350 rpm for 5 ~ 10 seconds.
5. Measure the maximum pressure while running, several times.
6. If the pressure does not reach the allowable limit, apply a small amount of oil to the cylinder wall through the nozzle holder hole and check the pressure again.
7. If the pressure raises after oil is apply, check the cylinder wall and piston ring.
8. If the pressure is still low, check the top clearance, valve clearance and cylinder head.

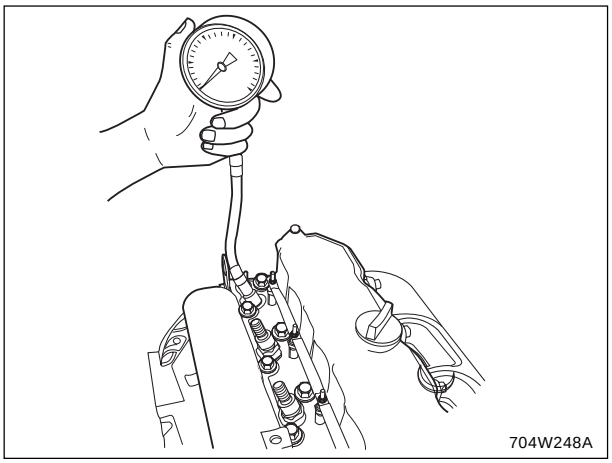

Compression pressure	Factory spec.	3.24 ~ 3.73 MPa 33 ~ 38 kgf/cm^2 470 ~ 541 psi
	Allowable limit	2.55 MPa 26 kgf/cm^2 370 psi
Difference between two cylinders	Allowable limit	10 %

NOTE:

- *Check the compression pressure with the specified valve clearance for proper air in taking.*

b.Valve clearance

1. Remove the cylinder head cover and the timing window cover on the flywheel housing and all glow plugs.
2. Turn the flywheel and align the 1 TC mark mark with the timing mark of window on the flywheel housing. This will position the 1st cylinder valves at the top dead center during compression stroke.
3. Measure the clearance at the valves marked with ○ in the table below with a feeler gauge.
4. If the clearance is not within the factory specifications, turn the adjusting screw to adjust.
5. Turn the flywheel just one turn to position the 1st cylinder valves at the top head center during overlap.
6. Measure the clearance at the valves marked with ● in the table below with a feeler gauge.
7. If the clearance is not within spec. ; adjust. See above.

Factory spec.	3A150	In. : 0.25 mm 0.0098 in.
		Ex. : 0.30 mm 0.0118 in.
	TD1300	In. : 0.1 mm 0.0039 in.
		Ex. : 0.1 mm 0.0039 in.

Cylinder NO.	1		2		3	
Valve	IN.	EX.	IN.	EX.	IN.	EX.
Checking	○	○	●	○	○	●

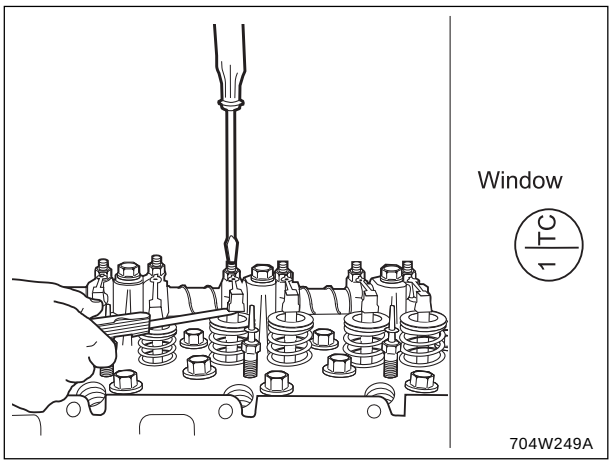

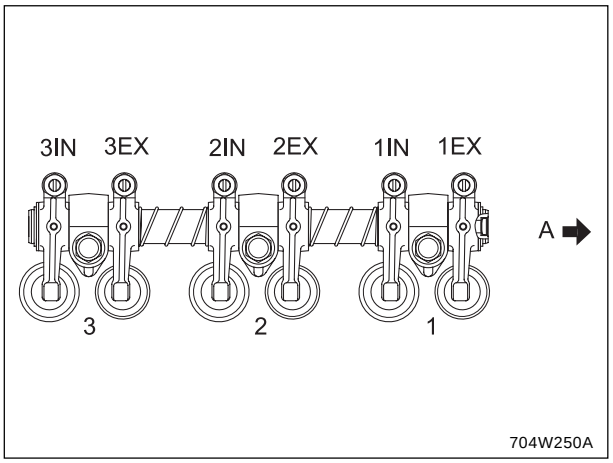

(A) Gear Case

B. DISASSEMBLING AND ASSEMBLING

a. Cylinder head cover, glow plugs and fuel overflow pipes.

1. Remove the injection pipes and over flow pipe.
2. Remove the glow plugs.
3. Remove the injection nozzles, gaskets, and heat seals.
4. Remove the cylinder head cover.

(When reassembling)

- Check that the cylinder head cover gasket is not defective.
- Tighten the cylinder head cover cap nuts in several steps.

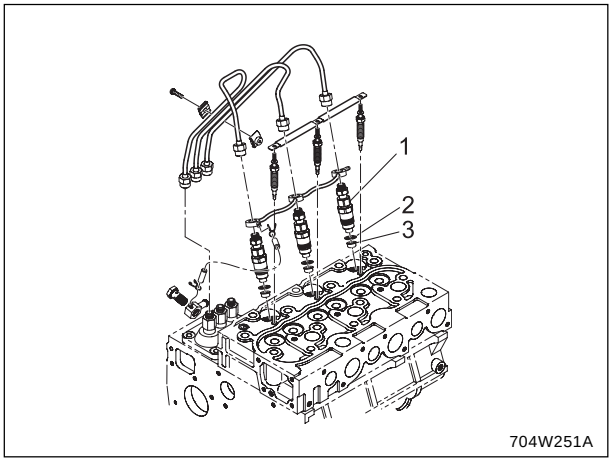

(1) Injection Nozzle (3) Heat Seal
(2) Gasket

b. Heat seal removal procedure

1. Drive screw driver lightly into the heat seal hole.
2. Turn screw driver three or four times each way.
3. While turning the screw driver, slowly pull the heat seal and the injection nozzle gasket. If the heat seal drops, repeat the above procedure.
4. The heat seal and injection nozzle gasket must be changed when the injection nozzle is removed for cleaning or for service.

NOTE:

- *Use a philips screw driver that has a diameter which is bigger than the heat seal hole 1/4 in. (approx. ϕ 6mm).*

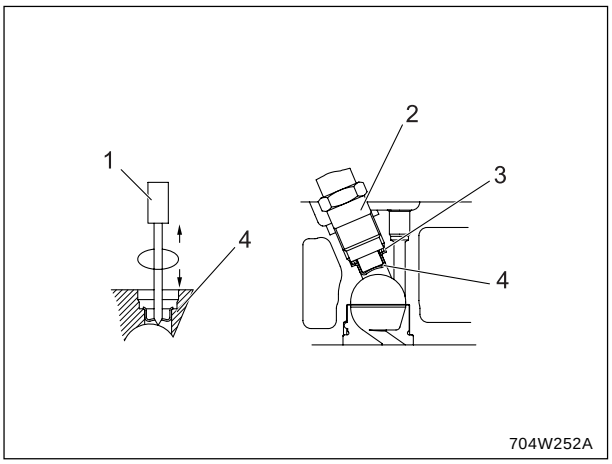

(1) Philips Screw Driver (2) Nozzle
(3) Injection Nozzle Gasket (4) Heat Seal

c. Rocker arm assembly

1. Loosen the bolts in several steps and the specified sequence shown in the figure and remove them.
   - To loosen (3) to (1)
   - To tighten (1) to (3)
2. Remove the rocker arm assembly and the push rod.

(When reassembling)

- Rest the end of push rod at the indent of tappet and install the rocker arm assembly.
- Tighten the bolts in several steps and in the specified sequence to the specified torque. Refer to the figure.
- Adjust the valve clearance after assembling the rocker arm assembly.

Tightening torque	3A150	60.8 ~ 70.6 N·m 6.2 ~ 7.2 kgf·m 44.8 ~ 52.1 lbf·ft
	TD1300	29.4 ~ 34.3 N·m 3.0 ~ 3.5 kgf·m 21.7 ~ 25.3 lbf·ft

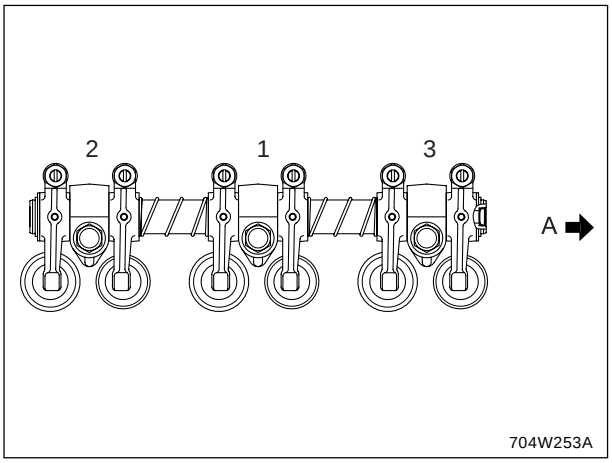

(A) Gear Case

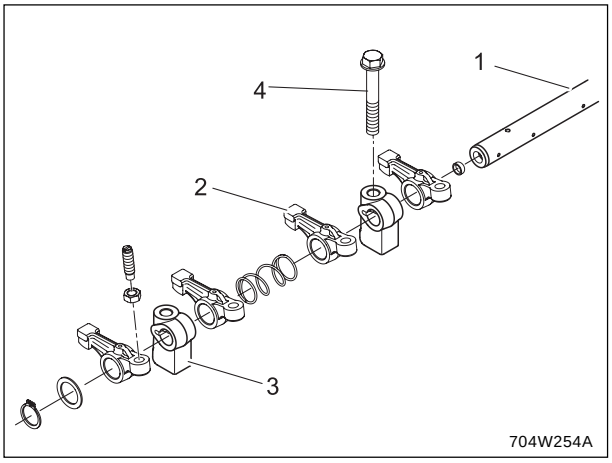

(1) Rocker Arm Shaft (3) Rocker Arm Bracket
(2) Rocker Arm (4) Bolt

d. Cylinder head

1. Remove the screw in the specified sequence shown in the figure and remove the cylinder head (1) and head gasket.
- To loosen (14) to (1)
- To tighter (1) to (14)
2. Remove the water flange (2).
3. Take out the tappets from the cylinder block.

NOTE:

- *Mark the cylinder number to the tappets to prevent interchanging.*

(When reassembling)

- Apply liquid gasket (Three bond 1215 or equivalent) on the both sides of the water flange gasket.
- Replace the head gasket with a new one and place on the cylinder block, be careful of its direction and side.
- When using the head gasket shim, install the shim on the cylinder head prior to the gasket.
- Before installing the tappets apply engine oil around them.

IMPORTANT:

- *Apply oil to the thread of screws and tighten in several steps and the specified sequence shown in the figure to the specified torque.*
- *Check the torque after 30 minutes operation of the assembled engine, and adjust valve clearance.*

Tightening torque	3A150	103.0 ~ 107.9 N·m 10.5 ~ 11.0 kgf·m 75.9 ~ 79.6 lbf·ft
	TD1300	78.5 ~ 83.4 N·m 8.0 ~ 8.5 kgf·m 57.9 ~ 61.5 lbf·ft

e. Valve

1. Compress the valve spring and remove the collect (2).
2. Remove the retainer (3), valve spring (4), valve stem seal (5) and the valve (1).

IMPORTANT:

- *Do not interchange valves and valve parts.*
- *Mark the cylinder number on the valve and the parts to prevent interchanging.*

(When reassembling)

- Apply oil to the stem of valve and install in the cylinder head.
- Lubricate the valve and the parts after reassem-bling.

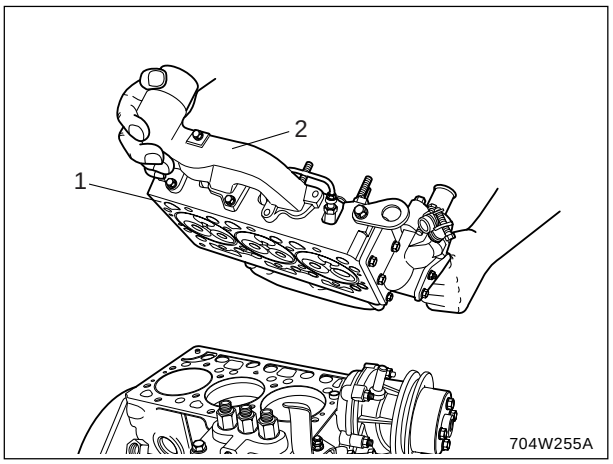

(1) Cylinder Head (2) Water Flange

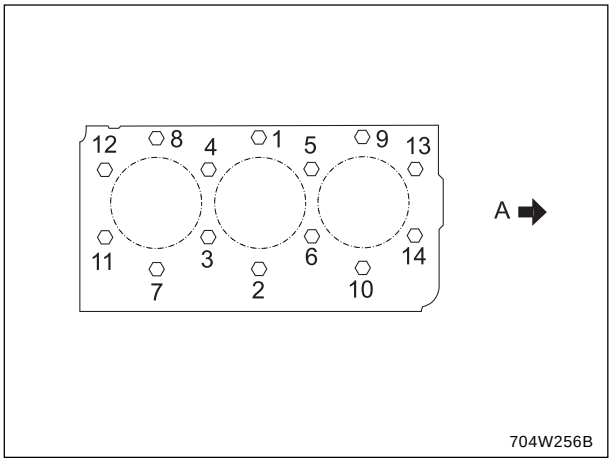

(A) Gear Caser

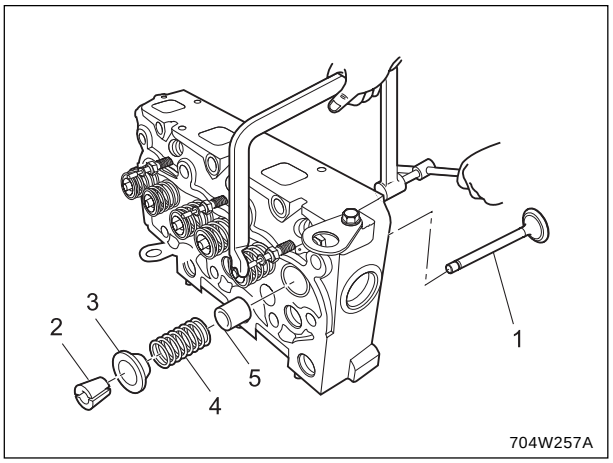

(1) Valve (4) Valve Spring
(2) Collect (5) Valve Stem Seal
(3) Retainer

C. TIMING GEARS AND CAMSHAFTS

a. Injection pump

1. Remove the injection pump cover (3) with the engine stop lever (2).
2. Remove the injection pump.

(When reassembling)

- Apply liquid gasket to the both sides of injection pump cover gasket and install it.
- Install the injection pump so that its control rack pin (4) engages with the groove (5) of fork lever 1 (1).
- Install the injection pump cover with the arm of engine stop lever (2) at the right of the arm of the fork lever 1 (1).

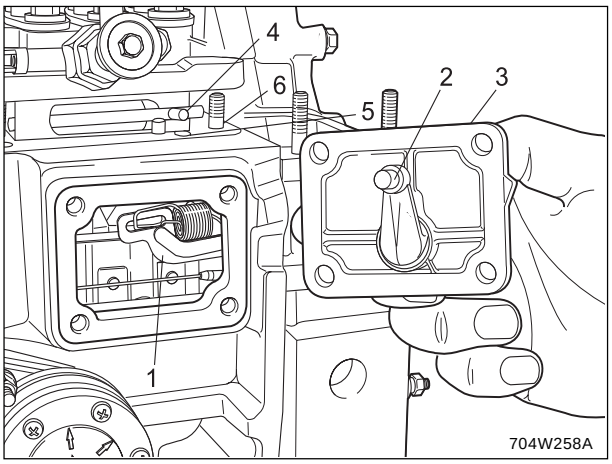

(1) Fork Lever 1
(2) Engine Stop Lever
(3) Injection Pump Cover
(4) Control Rack Pin
(5) Groove
(6) Shim

b. Governor spring and Speed control plate

1. Disconnect the governor spring 1 (1) and 2 (2) from the governor lever (4).
2. Remove the speed control plate.
3. Remove the governor spring.

(When reassembling)

- Be careful not to drop the governor springs 1, 2 into the gear case.
- Fix the governor springs (1), (2) to the fork lever 2 (3) and pull the springs. Hook springs on to the governor lever (4).
- Apply a liquid gasket both side of speed control plate gasket.

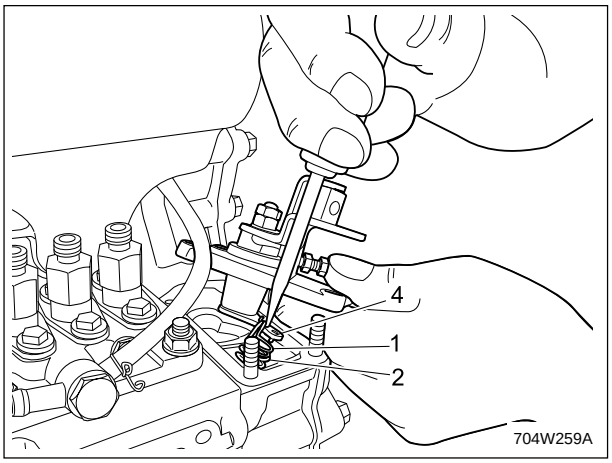

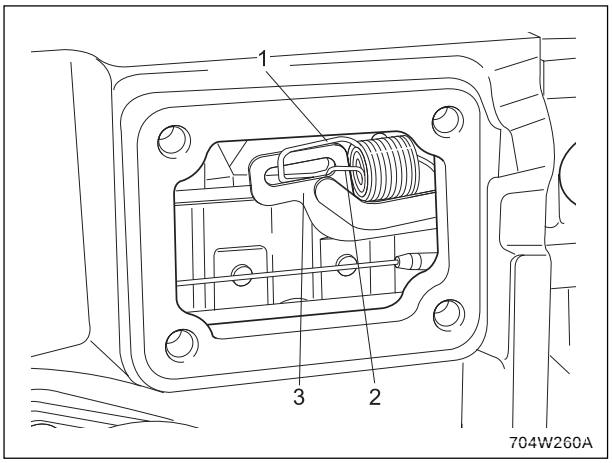

(1) Governor Spring 1
(2) Governor Spring 2
(3) Fork Lever 2
(4) Governor Lever

c. Start spring

1. Remove the start spring (1) from the fork lever 1 (2).

(When reassembling)

- Be careful not to drop the start spring into the gear case.
- Hook the start spring so that the longer hook is on the fork lever side.

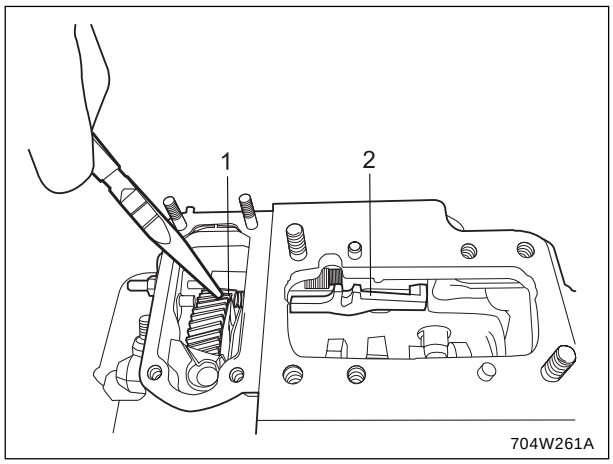

(1) Start Spring (2) Fork Lever 1

d. Fan drive pulley

1. Install the stopper into the flywheel, so that the crankshaft may not turn.
2. Flatten the metal lock and loosen the crankshaft nut (2).
3. Remove the fan drive fan drive pulley (1).

Tightening torque	Crankshaft nut	137.3 ~ 156.9 N·m 14.0 ~ 16.0 kgf·m 101.3 ~ 115.7 lbf·ft

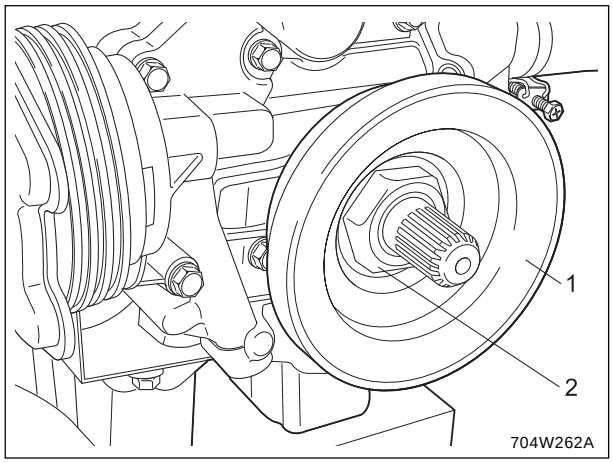

(1) Fan Drive Pulley (2) Crankshaft Nut

e. Gear case

1. Remove the gear case.

(When reassembling)

- Stick the O-ring (1) to the gear case with thin grease to prevent from coming off during reassembling.
- Apply grease to the crankshaft oil seal lip on the gear case and take care not to damage it when installing.
- Apply liquid gasket (three bond 1215 or equivalent) to the both sides of gear case gasket.

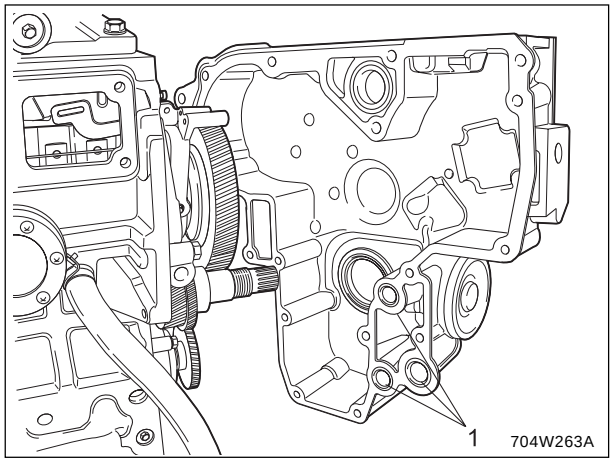

(1) O-Ring

f. Water pump and relief valve

1. Remove the water pump body (1) from the gear case.

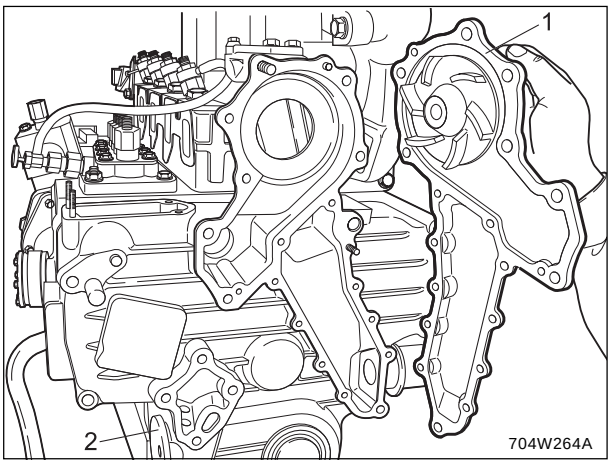

(1) Water Pump Body (2) Relief Valve Cover

g. Idle gear and crank gear

1. Remove the crankshaft collar (6), O-ring (5), oil slinger (4) and crank gear collar (3) in the order.
2. Remove the idle gear (1).
3. Remove the crankshaft gear (2) with a special use puller set.

(When reassembling)

- Heat the crankshaft gear to approx. 80 °C (176 °F) and insert the crankshaft.
- Apply oil to the O-ring (5).

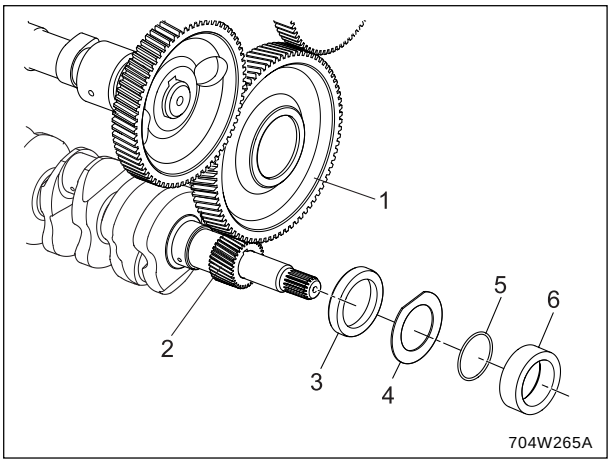

IMPORTANT:

- *Install the idle gear, aligning the alignment marks referring to the figure.*

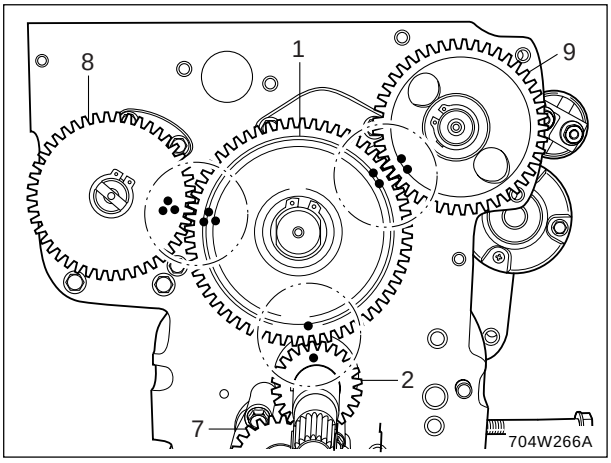

(1) Idle Gear
(2) Crankshaft Gear
(3) Crank Gear Collar
(4) Oil Slinger
(5) O-Ring
(6) Crankshaft Collar
(7) Oil Pump Gear
(8) Injection Pump Gear
(9) Cam Gear

h. Camshaft

1. Align the holes on the cam gear (2) with the crews. Loosen them through the holes with a T handle wrench.
2. Draw out the camshaft (1).
3. Remove the cam gear (2).

(When reassembling)

- Heat the cam gear to approx. 80°C (176°F) and insert the camshaft (1).

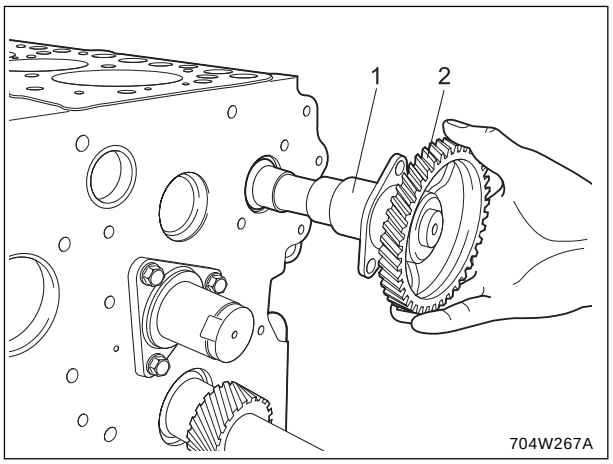

(1) Camshaft (2) Cam Gear

i. Fuel camshaft

1. Remove the fuel camshaft stopper.
2. Loosing the fork lever holder screws, remove the fuel camshaft (4) with fork lever holder (5), fork lever 1 (1) and 2 (2).
3. Remove the Injection pump gear (3).

(When reassembling)

- Heat the injection pump gear to approx. 80°C (176°F) and insert the camshaft (4).

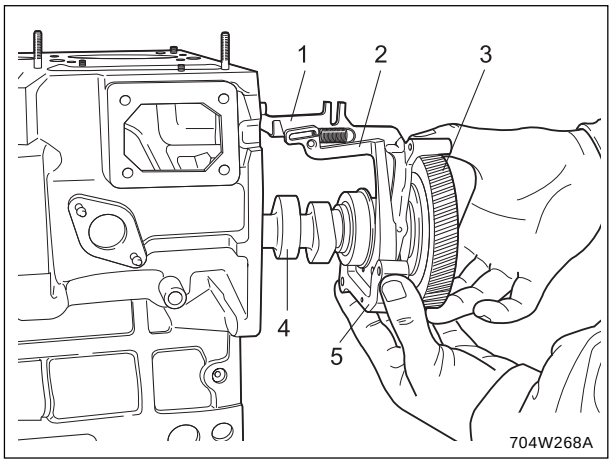

(1) Fork Lever 1
(2) Fork Lever 2
(3) Injection Pump Gear
(4) Camshaft
(5) Fork Lever Holder

D. CONNECTING ROD AND PISTON

a. Oil pan and oil filter

1. Remove the oil pan.
2. Remove the oil strainer (1).

(When reassembling)

- Be sure to install the O-ring (2) between the oil strainer and the cylinder block.

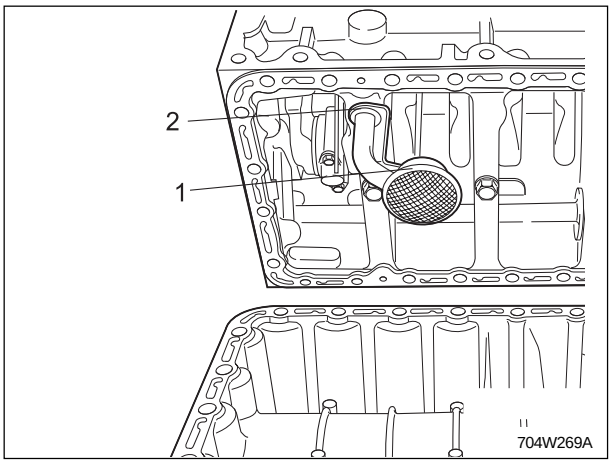

(1) Oil Strainer (2) O-Ring

b. Piston and connecting rod

1. Remove the screws and the connecting rod cap.
2. Push out the rod and piston assembly.

(When reassembling)

- Apply oil to the crankpin bearing, cylinder wall and connecting rod cap screw.
- Insert the connecting rod and piston assembly with the mark on the rod facing the injection pump, using a piston ring compressor.

IMPORTANT:

- *Mark the cylinder number on the piston and connecting rod to prevent interchanging.*
- *Carefully insert the piston and ring assembly in the cylinder. Be careful when compressing the rings not to damage the chrome-plate on the piston rings.*
- *If the connecting rod cap screws can not be screwed to the end by hand, replace the screw.*

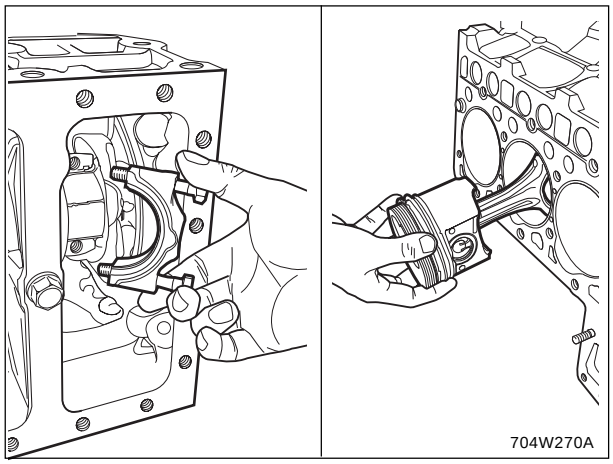

c. Piston ring and piston pin

1. Remove the piston rings with a piston ring replacing tool.
2. Remove the piston pin.

(When reassembling)

- Clean all the parts before assembling.
- Heat the piston in approx. 80 °C (176 °F) of oil for 10 ~ 15 minutes, when inserting the piston pin into the piston.
- Install the piston and connecting rod with the mark FW on the piston towards the flywheel and the mark on connecting rod towards the injection pump.
- Install the piston rings with their manufacture's mark to the top of piston.
- Install the expander in the oil ring with its gap opposite to the gap of oil ring.
- Install the top ring with its gap at 1.57 rad (90 °) from the piston pin to the exhaust port.
- Install the second ring and the oil ring with their gap at every 2.09 rad (120 °).

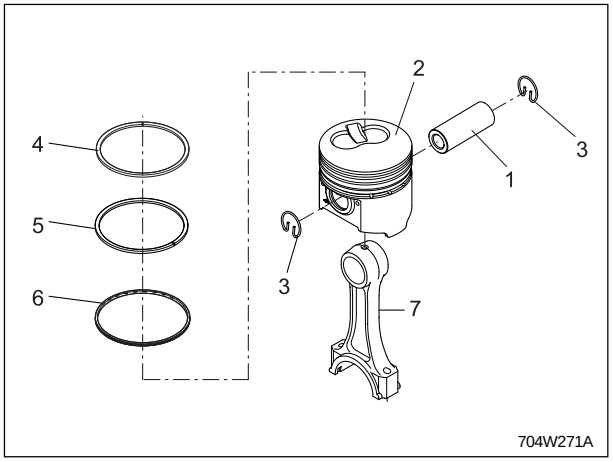

(1) Piston Pin
(2) Piston
(3) Piston Pin Snap Ring
(4) Top Ring
(5) Second Ring
(6) Oil ring
(7) Connecting Rod

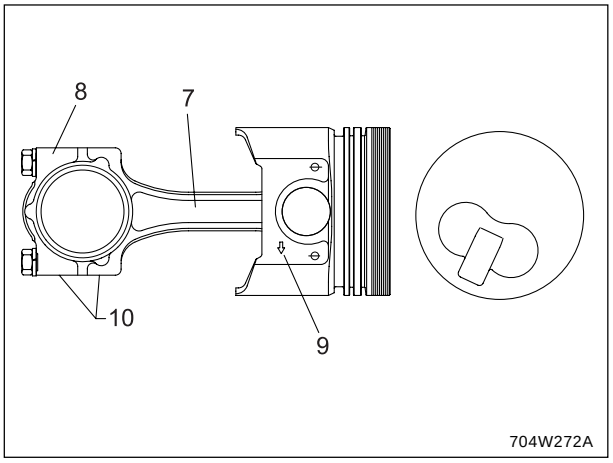

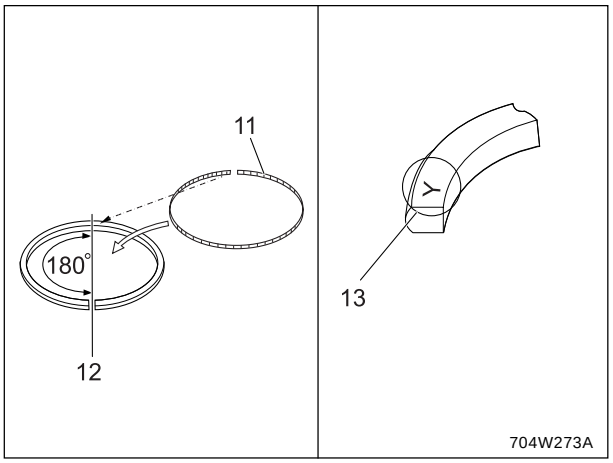

(7) Connecting Rod
(8) Connecting Rod Cap
(9) Casting Mark
(10) Marks
(11) Expander Joint
(12) Oil Ring Gap
(13) Manufacturer's Mark

E. CRANKSHAFT

a. Flywheel

1. Install the stopper to the flywheel and loosen the screw.
2. Remove the flywheel stopper and the flywheel.

(When reassembling)

- Clean the end of the crankshaft and the mating surface of the flywheel.
- Apply oil to flywheel screws.
- Fit the flywheel hole to crankshaft hole and tighten the flywheel bolts to specified torque.

NOTE:

- *Screw longer screws to the flywheel to carry It if needed.*

Tightening torque	Flywheel screw	98.1 ~ 107.9 N·m 10.0 ~ 11.0 kgf·m 72.3 ~ 79.6 lbf·ft

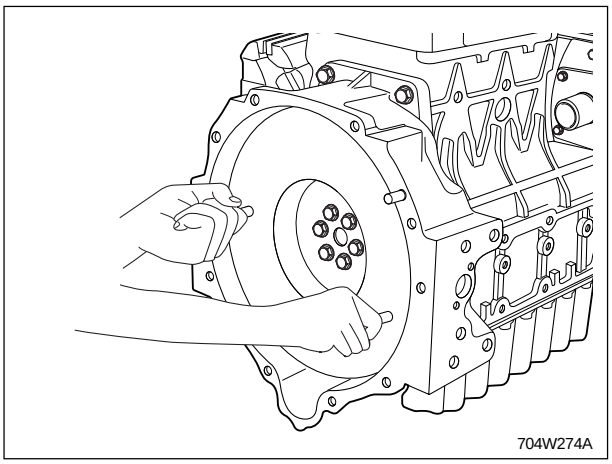

b. Bearing case cover

Loosen the screw first inside and next outside, and lift the cover (1) by screwing the two screws gradually and evenly, referring to the photo.

(When reassembling)

- Apply grease to the oil seal lip. Take care that the lip seal is is not rolled while installing.

Tightening torque	Bearing case cover screw	23.5 ~ 27.5 N·m 2.4 ~ 2.8 kgf·m 17.4 ~ 20.3 lbf·ft

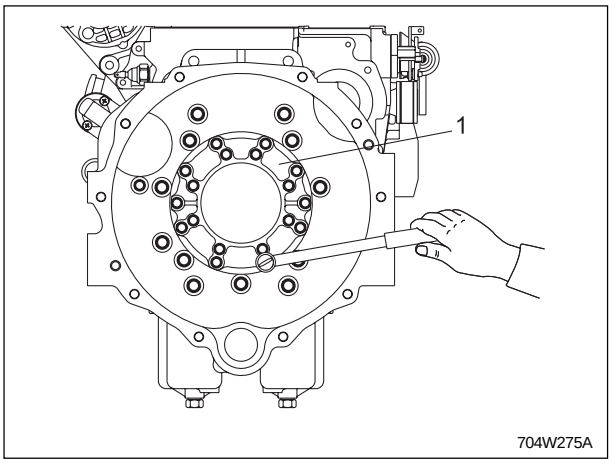

(1) Bearing Case Cover

c. Crankshaft

1. Remove the bearing case screw 2.
2. Pull out the crankshaft, taking care not to damage the crankshaft bearing 1.

(When reassembling)

- Apply oil to the bearing case screw 2.
- Clean the oil passage of the crankshaft with compressed air.

Bearing case screw 2	3A150	68.7 ~ 73.6 N·m 7.0 ~ 7.5 kgf·m 50.6 ~ 54.2 lbf·ft
	TD1300	63.8 ~ 68.7 N·m 6.5 ~ 7.0 kgf·m 47.0 ~ 50.6 lbf·ft

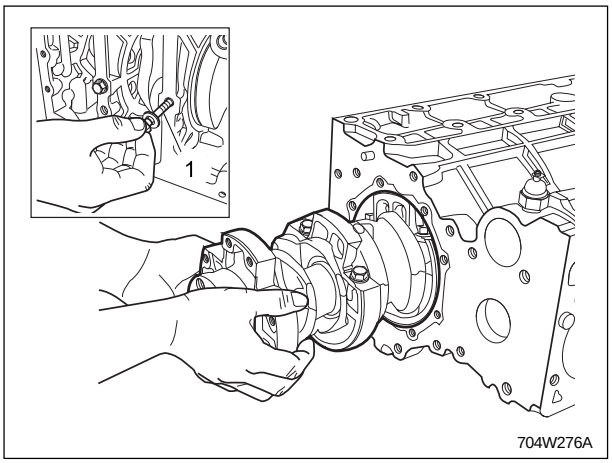

(1) Bearing Case Scraw 2

d. Main bearing case

1. Remove the bearing case screws 1 (4) and remove the main bearing case 1, 2, 3 (1,2,3).
2. Remove the thrust bearing from the flywheel end bearing case.

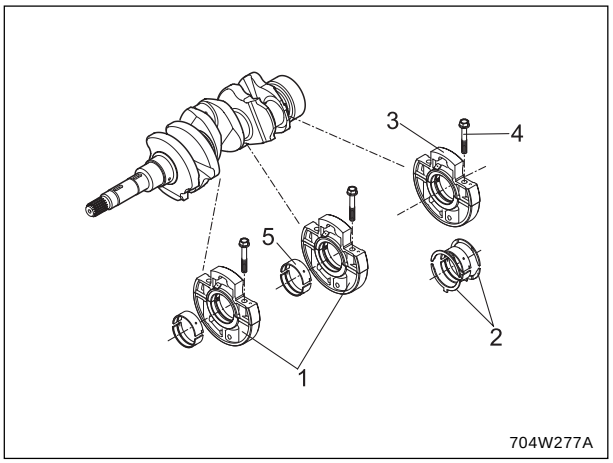

(1,2,3) Main Bearing Case Assembly 1, 2, 3

(4) Bearing Case Screw 1

(5) Thrust Bearings

IMPORTANT:

- *Mark the location line to the bearing case, to prevent interchanging.*

(When reassembling)

- Clean the parts and the oil passage of the bearing case.
- Apply oil to the journal, bearing inserts and the bearing case screws.
- Place the thrust bearings on the bearing case with their oil groove outside.
- Install the main bearing case with the mark “FLY WHEEL” toward the flywheel.

Bearing case screw 1	3A150	46.1 ~ 51.0 N·m 4.7 ~ 5.2 kgf·m 34.0 ~ 37.6 lbf·ft
	TD1300	29.4 ~ 34.3 N·m 3.0 ~ 3.5 kgf·m 21.7 ~ 25.3 lbf·ft

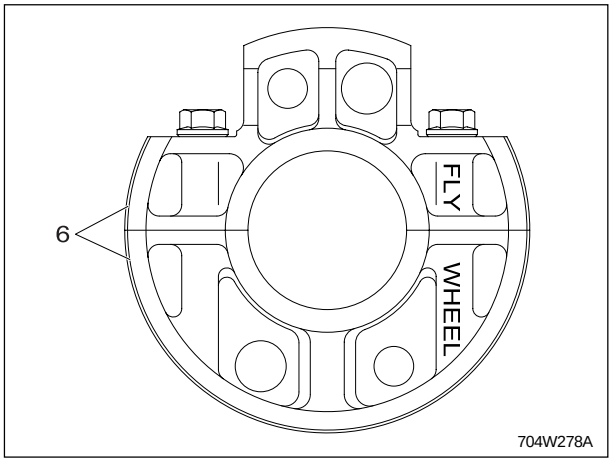

(6) Bearing Case

F. SERVICING

a. Cylinder head and valve

(A) Cylinder head surface flatness

1. Thoroughly clean the cylinder head surface.
2. Place a straight edge on the cylinder head and measure the clearance with a feeler gage as shown in the figure.
3. If the measurement exceeds the allowable limit, replace the cylinder head.

IMPORTANT:

- *Do not place the straight edge on the combustion* chamber.

Flatness	Allowable limit	0.05 mm 0.002 in.

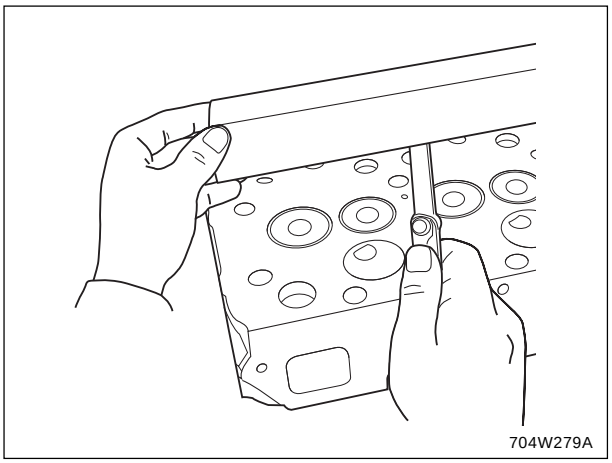

(B) Cylinder head surface flaw

1. Prepare an air spray red check.
2. Clean the cylinder head surface with the detergent (B).
3. Spray the cylinder head surface with the red permeative liquid (A).
4. Wash away the red permeative liquid on the cylinder head surface with the detergent (B) after ten minutes.
5. Spray the cylinder head surface with the white developer (C).
6. If any flaw is found such as a red mark, replace the cylinder head.

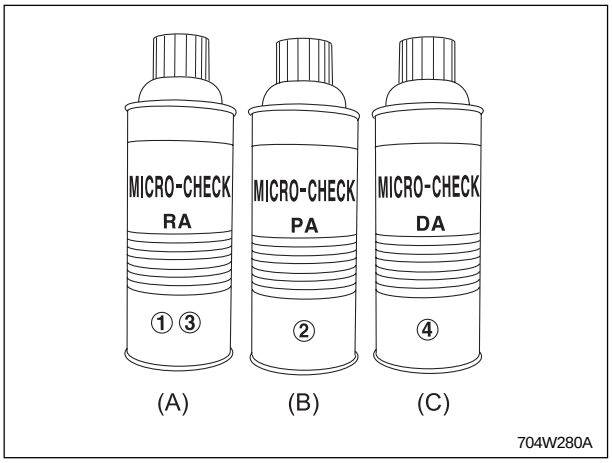

(A) Red Permeative Liquid
(B) Detergent
(C) White Developer

(C) Valve stem clearance

1. Remove the carbon from the valve guide.
2. Measure the valve stem O.D. with an outside micrometer.
3. Measure the valve guide I.D. of cylinder head, and calculate the clearance.
4. If the measurement exceeds the allowable limit, replace the valve guide of the valve.

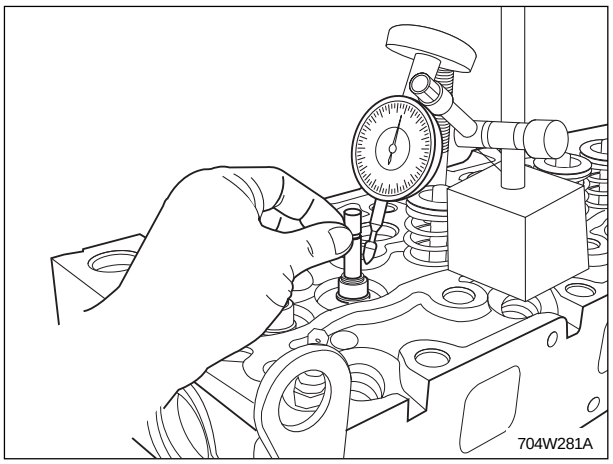

Valve stem clearance	Factory spec.	3A150	0.040 ~ 0.070 mm 0.00157 ~ 0.00276 in.
		TD1300	0.025 ~ 0.055 mm 0.00098 ~ 0.00216 in.
	Allowable limit		0.1 mm 0.004 in.
Valve guide bore I.D.	Factory spec.	3A150	8.015 ~ 8.030 mm 0.31555 ~ 0.31614 in.
		TD1300	8.0 ~ 8.015 mm 0.31496 ~ 0.31555 in.
Valve stem O.D.	Factory spec.		7.960 ~ 7.975 mm 0.31339 ~ 0.31398 in.

(D) Valve recessing

1. Clean the cylinder head, the valve face and the seat.
2. Insert the valve in the guide.
3. Measure the valve recessing with a depth gauge.
4. If the recessing exceeds the allowable limit, replace the valve and check the valve seating.

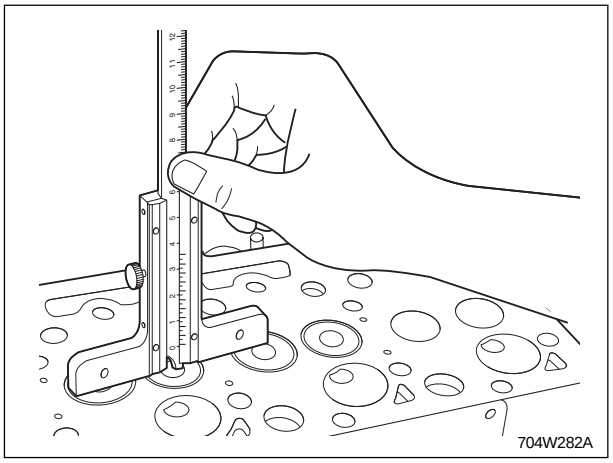

Valve recessing	Factory spec.	3A150	0.2 ~ 0.5 mm 0.0079~ 0.0197 in.
		TD1300	1.1 ~ 1.3 mm 0.0433 ~ 0.0512 in.
	Allowable limit	3A150	0.8 mm 0.0315 in.
		TD1300	1.6 mm 0.0630 in.

(E) Valve seat

1. Coat the valve face lightly with red lead and put the valve on its seat to check the contact.
2. If the valve does not seat all the way around the valve seat or the valve contact is less than 70%, correct the valve seating as follows.
3. Apply compound on the valve face evenly.
4. Put the valve on its seat hold it with the valve flapper.
5. Turn and lap the valve back and forth on the valve seat to lap.
6. Remove the compound and clean the valve and the seat.
7. Apply oil on the valve face and finish to complete fitting.
8. Repeat lapping until the valve seats correctly.

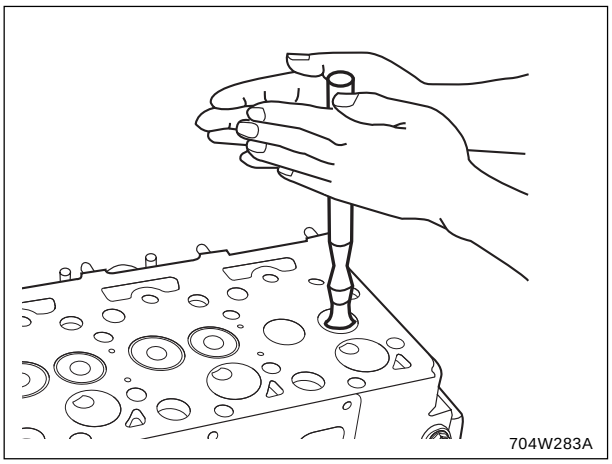

(F) Valve spring

1. Measure the free length of the spring with venire calipers.
2. Place the spring on a spring compression tester and compress to the specified length, and get the tension.
3. If the measurement is less than the allowable limit, replace the valve spring.

Tension	Factory spec.	17.7 N / 35.15 mm 12.0 kgf / 35.15 mm 26.5 lbs / 1.3839 in.
	Allowable limit	100 N / 35.15 mm 10.2 kgf / 35.15 mm 22.5 lbs / 1.3839 in.
Free length	Factory spec.	41.7 ~ 42.2 mm 1.6417 ~ 1.6614 in.
	Allowable limit	41.2 mm 1.622 in.

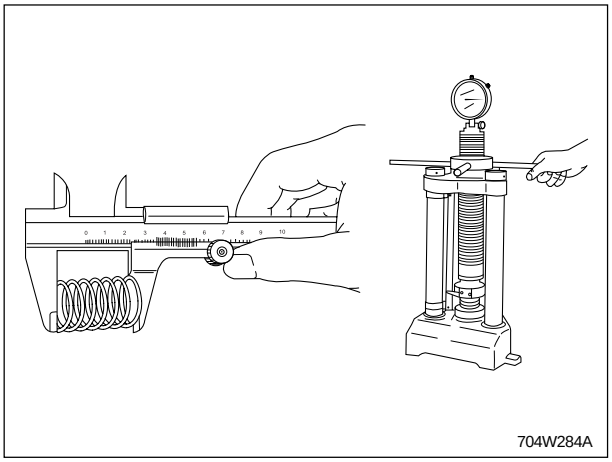

(G) Valve spring squareness (Tilt)

1. Place the spring on the surface plate and a square at its side.
2. Measure the maximum distance A (See figure), rotating spring.
3. If the measurement exceeds the allowable limit replace.

Valve spring square ness	Allowable limit	1.0 mm 0.039 in.

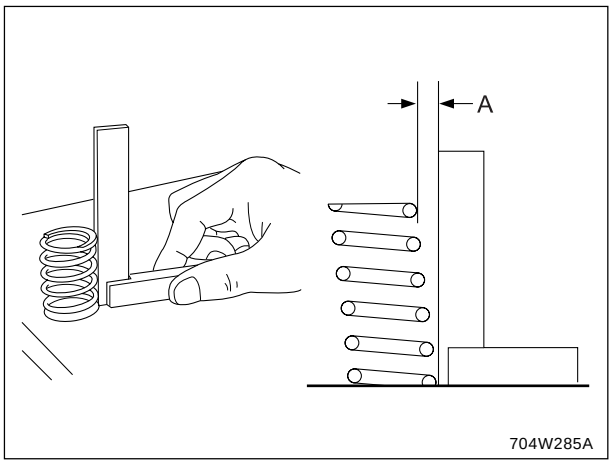

(H) Rocker arm bushing and shaft clearance

1. Measure the rocker arm I.D. with an inside micrometer.
2. Measure the rocker arm shaft O.D. with an outside micrometer.
3. If the clearance exceeds the allowable limit, replace the rocker arm.
4. If the clearance still exceeds the allowable limit after replacing the rocker arm replace the rocker arm shaft.

Clearance	Factory spec.	3A150	0.020 ~ 0.070 mm 0.00079 ~ 0.00276 in.
		TD1300	0.014 ~ 0.050 mm 0.00055 ~ 0.00197 in.
	Allowable limit		0.15 mm 0.0059 in.
Rocker arm shaft O.D.	Factory spec.	3A150	18.955 ~ 18.980 mm 0.74626 ~ 0.74724 in.
		TD1300	13.973 ~ 13.984 mm 0.5501 ~ 0.5506 in.
Rocker arm I.D.	Factory spec.	3A150	19.000 ~ 19.025 mm 0.74803 ~ 0.74902 in.
		TD1300	13.998 ~ 14.023 mm 0.5513 ~ 0.5529 in.

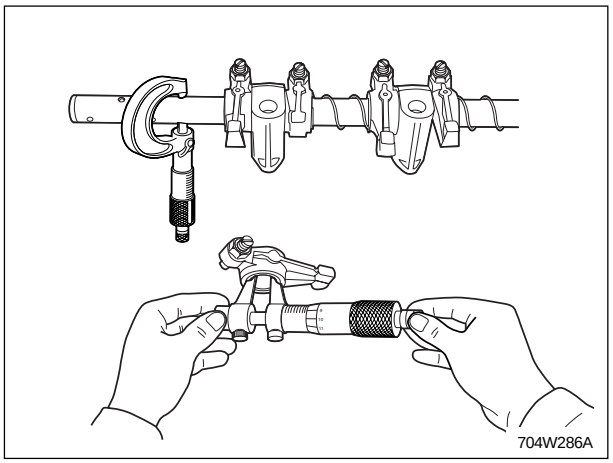

b. Timing gears and camshafts

(A) Timing gear backlash

1. Set a dial indicator (lever type) with its tip on the gear tooth.
2. Move the gear to measure the backlash, holding its mating gear.
3. If the backlash exceeds the allowable limit, check the oil clearance of the shafts and the gear.
4. If the oil clearance is improper, replace the gear.

Clearance	Factory spec.	0.04 ~ 0.11 mm 0.0016 ~ 0.0043 in.
	Allowable limit	0.15 mm 0.0059 in.

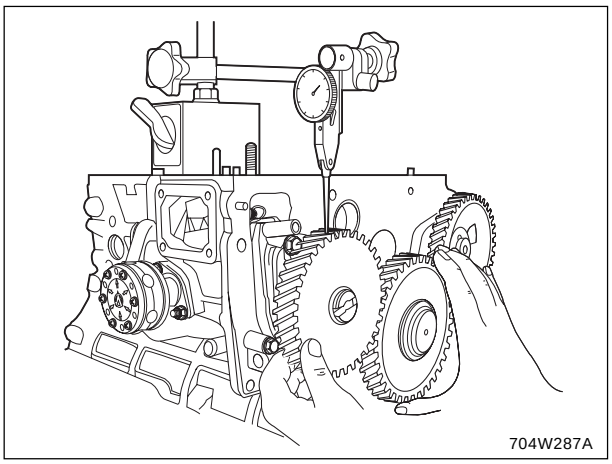

(B) Idle gear side clearance

1. Pull the idle gear collar 2 (1) and push the idle gear (2) to each end.
2. Measure the clearance A between the idle gear and the idle gear collar 2 with a feeler gauge.
3. If the clearance exceeds the allowable limit, replace the idle gear collar 1 (3).

Side clearance	Factory spec.	0.20 ~ 0.51 mm 0.0079 ~ 0.0201 in.
	Allowable limit	0.9 mm 0.035 in.

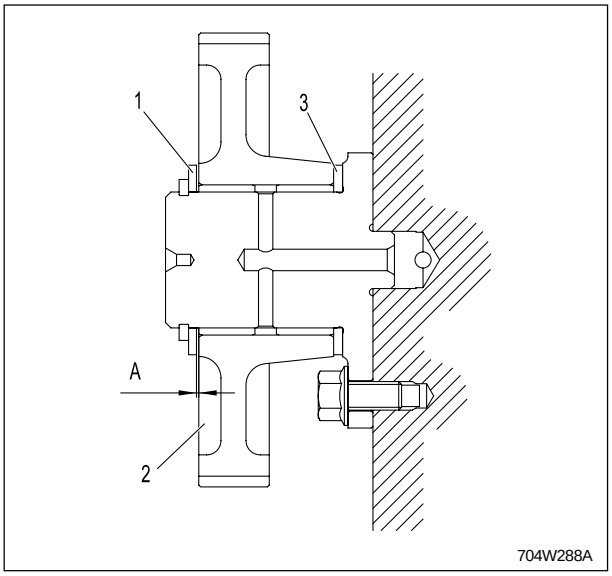

(1) Idle Gear Collar 2
(2) Idle Gear
(3) Idle Gear Collar 1

(C) Cam gear side clearance

1. Pull the cam gear (2) with the camshaft (1) to its end.
2. Measure the clearance A between the cam gear (2) and the camshaft stopper (3).
3. If the clearance exceeds the allowable limit, replace the camshaft stopper (3).

Side clearance	Factory spec.	0.07 ~ 0.22 mm 0.0028 ~ 0.0087 in.
	Allowable limit	0.3 mm 0.0118 in.

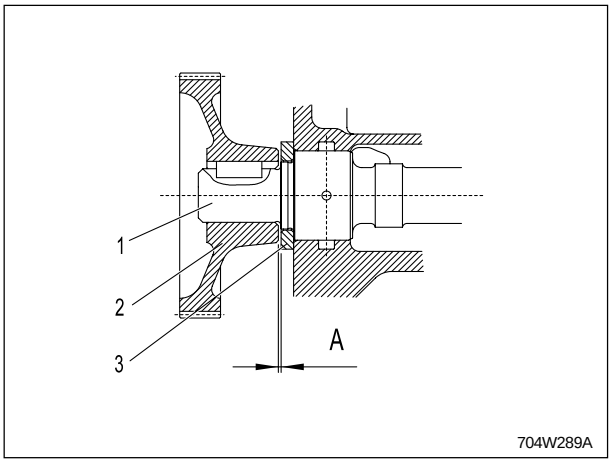

(1) Camshaft
(2) Cam Gear
(3) Camshaft Stopper

(D) Injection pump gear side clearance

1. Pull the fuel camshaft and pull the injection pump gear (1) to each end.
2. Measure the clearance A between the injection pump gear (1) and the snap ring (2) on the fuel camshaft.
3. If the clearance exceeds the allowable limit, check the gear, the bearing and the key.

Side clearance	Factory spec.	0.15 ~ 0.57 mm 0.0059 ~ 0.0224 in.
	Allowable limit	0.9 mm 0.035 in.

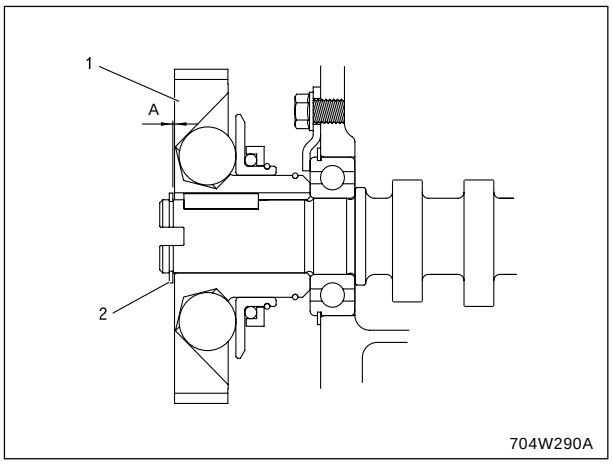

(1) Injection Pump Gear (2) Snap Ring

(E) Idle gear oil clearance

1. Measure the idle gear shaft O.D. with an outside micrometer.
2. Measure the idle gear bushings I.D. with an inside micrometer.
3. If the clearance exceeds the allowable limit, replace the bushing.

Oil clearance	Factory spec.	3A150	0.025 ~ 0.066 mm 0.00098 ~ 0.00260 in.
		TD1300	0.02 ~ 0.054 mm 0.00078 ~ 0.00212 in.
	Allowable limit		0.1 mm 0.0039 in.
Shaft O.D.	Factory spec.	3A150	37.959 ~ 37.975 mm 1.49445 ~ 1.49508 in.
		TD1300	27.967 ~ 27.980 mm 1.10106 ~ 1.10157 in.
Bushing I.D.	Factory spec.	3A150	38.000 ~ 38.025 mm 1.49606 ~ 1.49705 in.
		TD1300	28.0 ~ 28.021 mm 1.10236 ~ 1.10319 in.

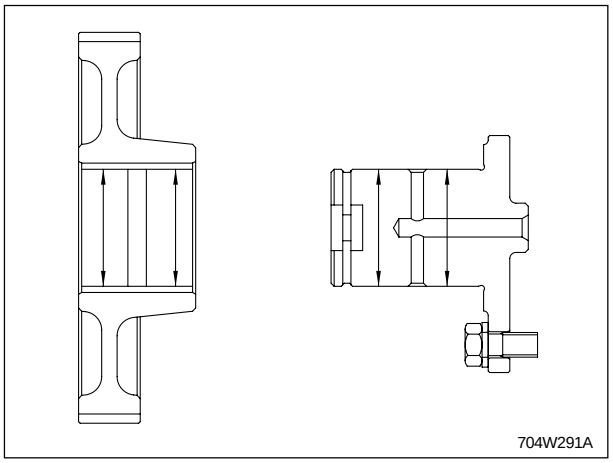

(F) Replacing idle gear bushings

1. Press out the bushings using an idle gear bushing replacing tool.
2. Clean the bushings and the bore, and apply oil to them.
3. Press in the bushing using the replacing tool.

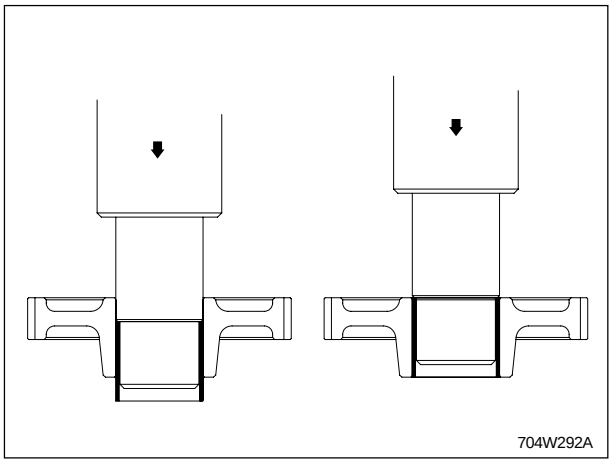

(G) Camshaft oil clearance

1. Measure the I.D. of the camshaft bore on the crankcase with an inside micrometer.
2. Measure the O.D. of the camshaft journal with an outside micrometer.
3. If the clearance exceeds the allowable limit, replace the shaft.

Oil clearance	Factory spec.	0.050 ~ 0.091mm 0.00197 ~ 0.00358 in.
	Allowable limit	0.15 mm 0.0059 in.
Journal O.D.	Factory spec.	39.934 ~ 39.950 mm 1.57221 ~ 1.57284 in.
Bore I.D.	Factory spec.	40.000 ~ 40.025 mm 1.57480 ~ 1.57579 in.

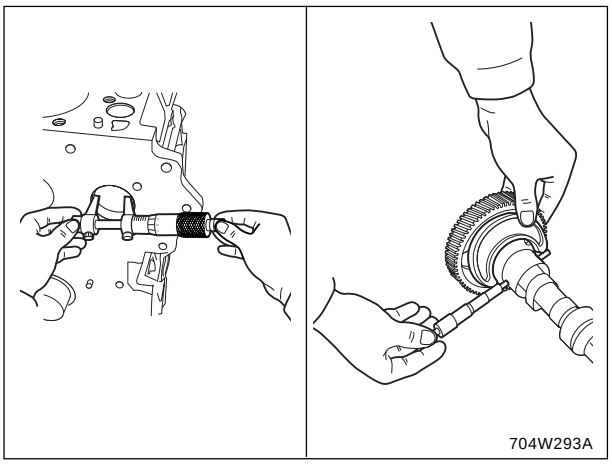

(H) Camshaft alignment

1. Support the camshaft with V blocks on the surface plate at both end journals and set a dial indicator with its tip on the intermediate journal.
2. Rotate the camshaft in the V block and get the eccentricity (half of the measurement).
3. If the eccentricity exceeds the allowable limit, replace the camshaft.

Eccentricity	Allowable limit	0.05 mm 0.002 in.

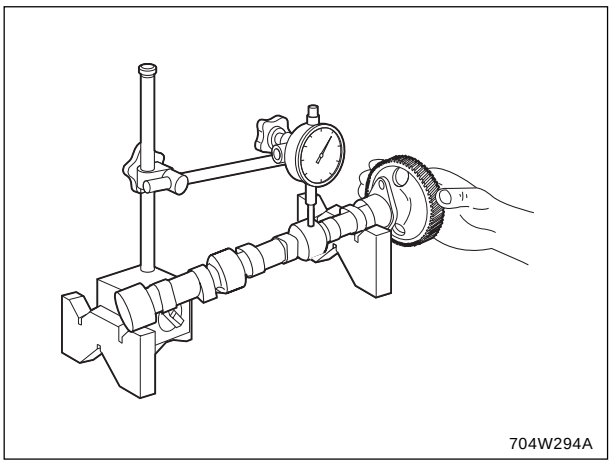

(I) Cam height

1. Measure the height of the camshaft lobes at their largest. O.D. with an outside micrometer.
2. If the measurement is less than the allowable limit, replace the camshaft.

Cam height	3A150	(IN.)	Specification	33.59 mm 1.3224 in.
			Allowable limit	33.54 mm 1.3205 in.
		(EX.)	Specification	33.69 mm 1.3264 in.
			Allowable limit	33.64 mm 1.3244 in.
	TD1300	(IN.)	Specification	33.5 ~ 33.6 mm 1.31889 ~ 1.32283 in.
			Allowable limit	33.45 mm 1.3169 in.
		(EX.)	Specification	33.5 ~ 33.6 mm 1.31889 ~ 1.32283 in.
			Allowable limit	33.45 mm 1.3169 in.

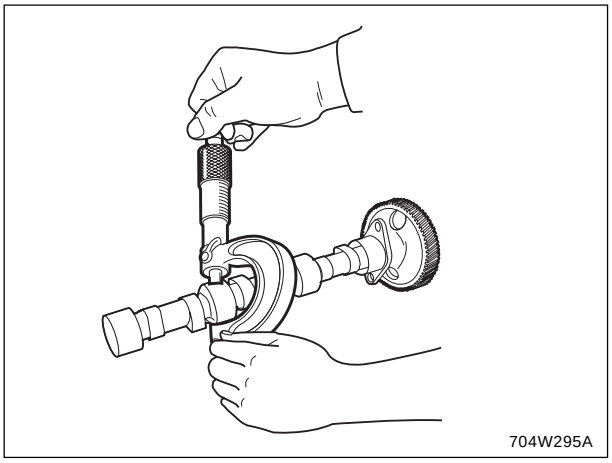

c. Connecting rod and piston

(A) Piston pin bore

1. Measure the I.D. of piston pin bore in piston (lengthwise and widthwise of the piston) with a cylinder gauge.
2. If the measurement exceeds the allowable limit, replace the piston.

Piston Pin bore I.D.	3A150	Factory spec.	25.000 ~ 25.006 mm 0.9843 ~ 0.9845 in.
		Allowable limit	25.03 mm 0.9854 in.
	TD1300	Factory spec.	23.0 ~ 23.013 mm 0.9055 ~ 0.9060 in.
		Allowable limit	23.053 mm 0.9076 in.

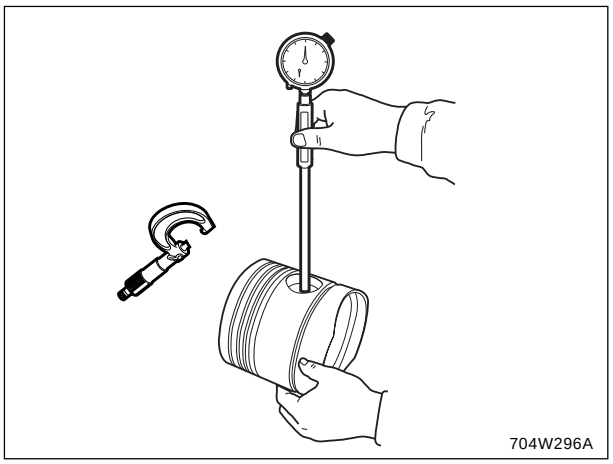

(B) Piston pin and brushing clearance

1. Measure the piston pin O.D. with an outside micrometer.
2. Measure the piston pin busing I.D. with an inside micrometer.
3. If the clearance exceeds the allowable limit with new bushing, replace the piston pin.

Piston pin and bushing clearance	Factory spec.		0.014 ~ 0.038 mm 0.00055 ~ 0.00150 in.
	Allowable limit		0.15 mm 0.0059 in.
Piston pin O.D.	Factory spec.	3A150	25.002 ~ 25.011 mm 0.98433 ~ 0.98469 in.
		TD1300	23.002 ~ 23.011 mm 0.90559 ~ 0.90594 in.
Bushing I.D.	Factory spec.	3A150	25.025 ~ 25.040 mm 0.98524 ~ 0.98583 in.
		TD1300	23.025 ~ 23.040 mm 0.90650 ~ 0.90709 in.

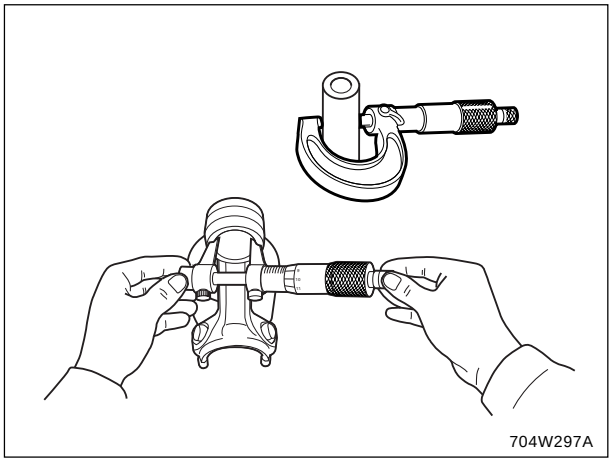

(C) Replacing piston pin bushing

1. Press out the bushing, using a piston pin bushing replacing tool.
2. Clean the new bushing and the bore and apply oil to them.
3. Press in the bushing, using the replacing tool.

IMPORTANT:

- *Align the oil holes of the connecting rod and the bushing.*

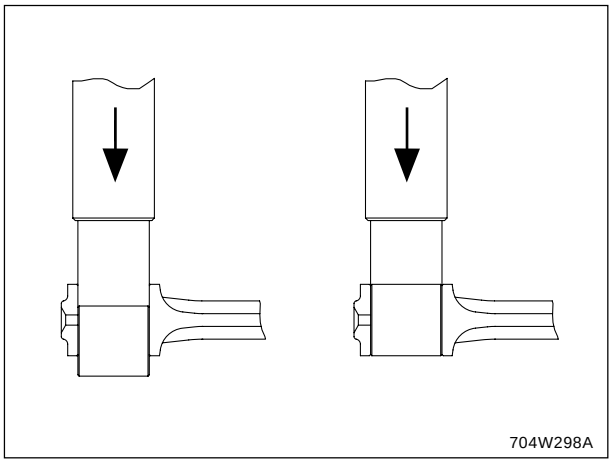

(D) Piston ring end gap

1. Push down the ring into the cylinder to the lower limit of ring travel in the assembled engine with a piston.
2. Measure the ring gap with a feeler gauge.
3. If the gap exceed the allowable limit, replace the piston ring.

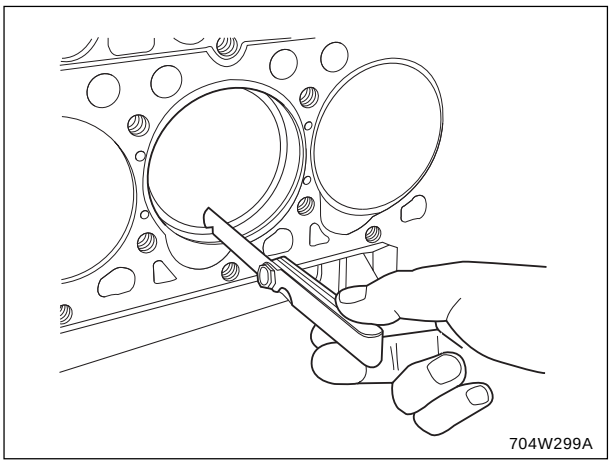

Piston ring end gap	2nd ring	Factory spec.	3A150	0.55 ~ 0.70 mm 0.0217 ~ 0.0276 in.
			TD1300	0.25 ~ 0.40 mm 0.0098 ~ 0.05575 in.
		Allowable limit		1.25 mm 0.0492 in.
	Top ring, oil ring	Factory spec.		0.25 ~ 0.40 mm 0.0098 ~ 0.0157 in.
		Allowable limit		1.25 mm 0.0492 in.

(E) Piston ring clearance

1. Clean the ring and the ring grooves, and install each ring in its groove.
2. Measure the clearance between the ring and the groove with a feeler gauge.
3. If the clearance exceeds the allowable limit, replace the piston ring.
4. If the clearance still exceeds the allowable limit with the new ring, replace the piston.

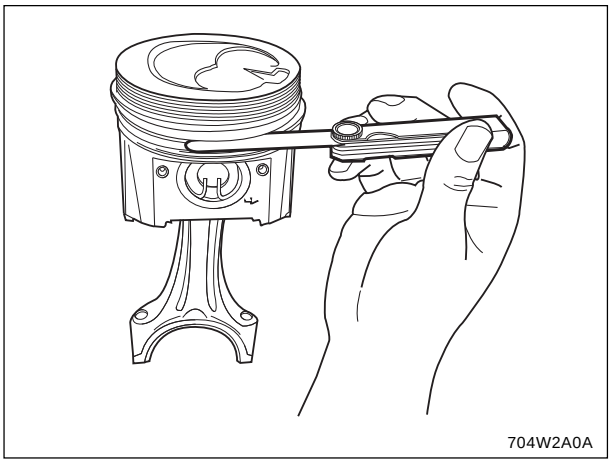

Piston ring clear-ance	2nd ring	Factory spec.	3A150	0.04 ~ 0.08 mm 0.00157 ~ 0.00315 in.
			TD1300	0.065 ~ 0.10 mm 0.00256 ~ 0.00394 in.
		Allowable limit		0.15 mm 0.0059 in.
	Oil ring	Factory spec.	3A150	0.02 ~ 0.06 mm 0.00079 ~ 0.00236 in.
			TD1300	0.02 ~ 0.06 mm 0.0008 ~ 0.00236 in.
		Allowable limit		0.15 mm 0.0059 in.

(F) Connecting rod alignment

1. Remove the connecting rod bearing and install the bearing cap.
2. Install the piston pin in the connecting rod.
3. Install the connecting rod on the connecting rod alignment tool.
4. Put a gauge over the piston pin and move it against the face plate.
5. If the gauge does not fit squarely against the face plate, measure the space between the pin of the gauge and the face plate.
6. If the measurement exceeds the allowable limit, replace the connecting rod.

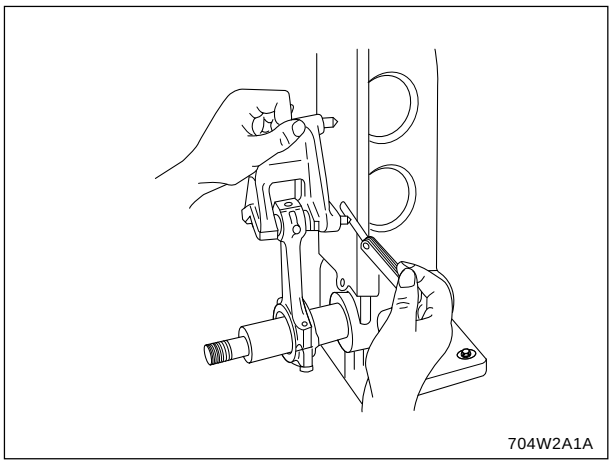

Space between gauge pin and face plate	Allowable limit	0.05 mm (0.0020 in.) at 100 mm (3.94 in.) of gauge pin span

d. Crankshaft

(A) Flywheel deflection and crankshaft end play

1. Set a dial indicator with its tip on the rear friction face of the flywheel near the edge.
2. Turn the flywheel and measure the deflection or the uneven wear.
3. If the measurement exceeds the allowable limit, remove the flywheel and check the mating faces of the crankshaft and flywheel.
4. If scored of worn excessively, regrind or replace the flywheel.
5. Move the crankshaft with flywheel back and forth to each end and measure the end play.
6. If the play exceeds the allowable limit, replace the side bearing.

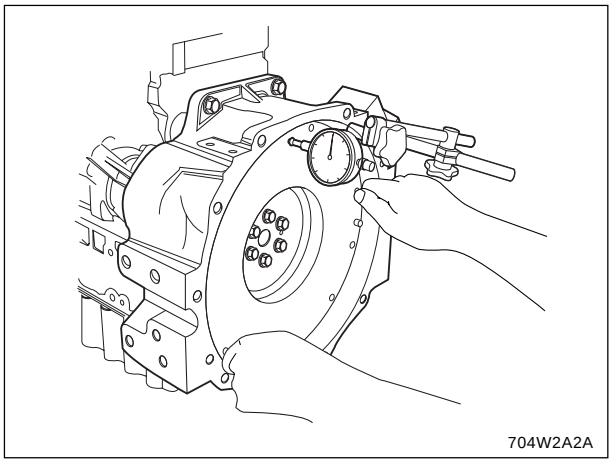

Deflection	Allowable limit	0.05 mm 0.0020 in.
End play	Factory spec.	0.15 ~ 0.31 mm 0.0059 ~ 0.0122 in.
	Allowable limit	0.5 mm 0.020 in.

(B) Crankshaft alignment

1. Support the crankshaft with V blocks on the surface plate at its front and rear journals and set a dial indicator with its tip on the intermediate journal.
2. Rotate the crankshaft in the V blocks and get the misalignment (half of the measurement).
3. If the misalignment exceeds the allowable limit, replace the crankshaft.

Misalignment	Allowable limit	0.08 mm 0.0031 in.

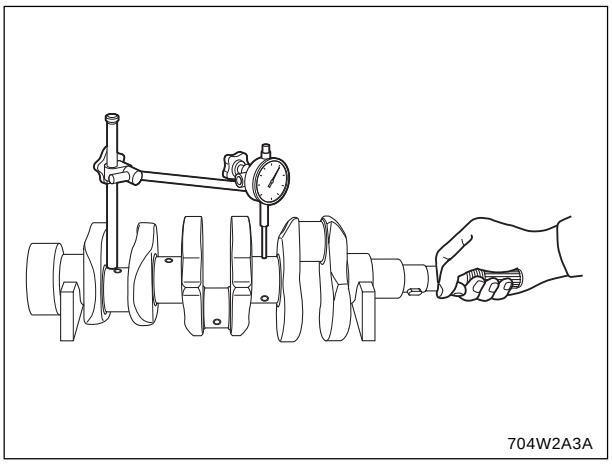

(C) Crankshaft journal and bearing 1 oil clearance

1. Measure the I.D. of the crankshaft bearing 1 with an inside micrometer.
2. Measure the O.D. of the crankshaft journal with an outside micrometer.
3. If the clearance exceeds the allowable limit, replace the bearing referring to Replacing Crankshaft Bearing 1.

Oil clearance	Factory spec.	0.040 ~ 0.118 mm 0.00157 ~ 0.00465 in.
	Allowable limit	0.20 mm 0.0079 in.
Journal O.D.	Allowable limit	51.921 ~ 51.940 mm 2.04414 ~ 2.04488 in.
Bearing 1 I.D.	Allowable limit	51.980 ~ 52.039 mm 2.04646 ~ 20.4878 in.

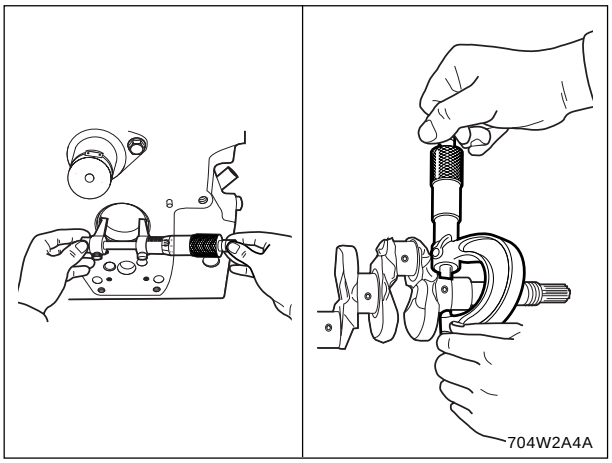

(D) Replacing crankshaft bearing 1

1. Press out the crankshaft bearing 1 using replacing tool.
2. Clean a new crankshaft bearing 1 and bore, and apply engine oil to them.
3. Press fit a new bearing 1 using a inserting tool, taking due care to see that the seam of bearing 1 faces the exhaust manifold side.

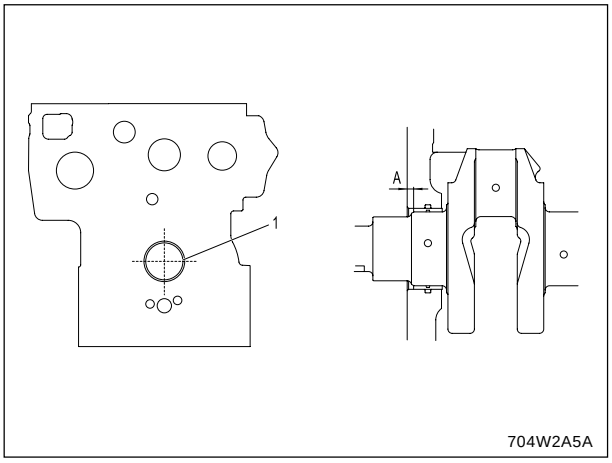

(1) Seam

(E) Crankshaft journal and bearing 2 oil clearance

1. Put plasticgauge lengthwise in the center of the journal.
2. Install the bearing cap and tighten the screw to the specified torque once, and remove the cap again.
3. Measure the amount of the flattening with the scale and get the oil clearance.
4. If the clearance exceeds the allowable limit, replace replace the bearing.

Oil clearance	Factory spec.	0.040 ~ 0.104 mm 0.00157 ~ 0.00409 in.
	Allowable limit	0.20 mm 0.0079 in.
Journal O.D.	Allowable limit	51.921 ~ 51.940 mm 2.04414 ~ 2.04488 in.
Bearing 2 I.D.	Factory spec	51.980 ~ 52.025 mm 2.04646 ~ 2.04823 in.

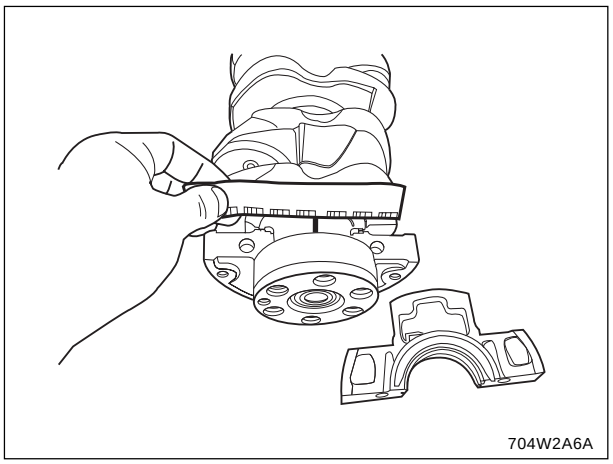

(F) Crank pin and connecting rod bearing 2 oil clearance

1. Put a strip of Plastigage lengthwise in the center of the crank pin.
2. Install the connecting rod and tighten the screws to the specified torque once, and remove the cap again.
3. Measure the amount of the flattening with the scale and get the oil clearance.
4. If the clearance exceeds the allowable limit, replace the bearing.

Oil clearance	Factory spec.	3A150	0.025 ~ 0.087 mm 0.00098 ~ 0.00343 in.
		TD1300	0.35 ~ 0.093 mm 0.0014 ~ 0.0037 in.
	Allowable limit		0.20 mm 0.0079 in.
Journal O.D.	Factory spec.	3A150	46.959 ~ 46.975 mm 1.84876~ 1.84947 in.
		TD1300	43.959 ~ 43.975 mm 1.73067 ~ 1.73130 in.
Bushing 1 I.D.	Factory spec.	3A150	47.000 ~ 47.046 mm 1.85040 ~ 1.85221 in.
		TD1300	44.010 ~ 44.052 mm 1.73268 ~ 1.73433 in.

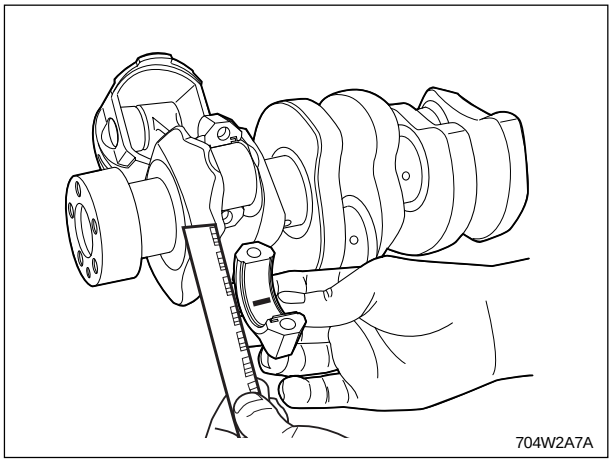

e. Cylinder bore

(A) Cylinder bore diameter

1. Measure the cylinder liner I.D. at sit positions shown in the figure to find the maximum wear.

3A150	83.000 ~ 83.022 mm 3.2677 ~ 3.2690 in.
TD1300	82.000 ~ 82.022 mm 3.2283 ~ 3.2292 in.

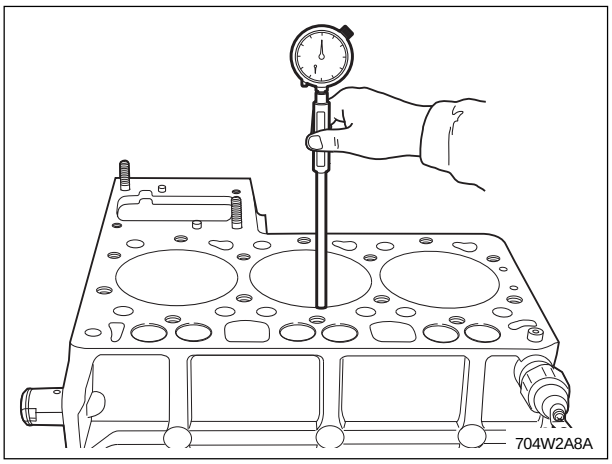

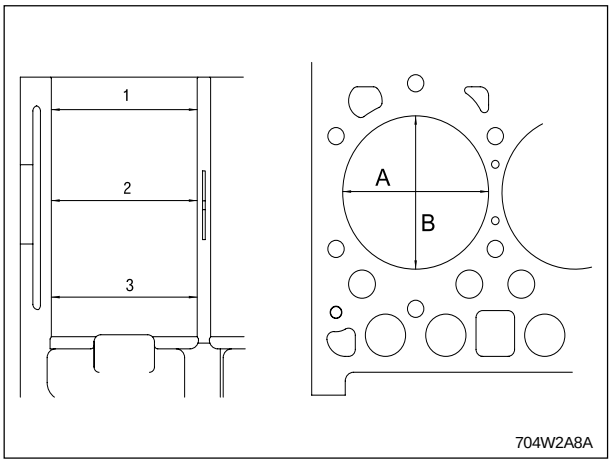

(A) Axial Direction

(B) Transverse Direction

1,2,3 Measuring Points

7.4 LUBRICATING SYSTEM

A. CHECKING

a. Engine oil pressure

1. Remove the oil pressure switch. Install the adapter and pressure tester in its place.
2. Start the engine and run it until it is warmed up. Measure the oil pressure at both idling and rated speed.
3. If the oil pressure is less than the allowable limit, check the oil level, oil filter, oil pump relief valve, oil passages and oil clearance.

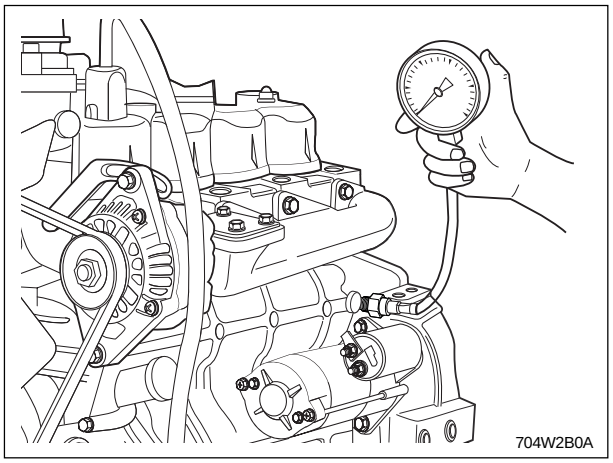

Engine oil pressure	At idle speed	Factory spec.		more than 68.6 kPa 0.7 kgf/cm² 7.11 psi
	At rated speed	3A150	Factory spec.	245 ~ 441 kPa 2.5 ~ 4.5 kgf/cm² 35.6 ~ 64.0 psi
			Allowable limit	294.2 kPa 3.0 kgf/cm² 42.7 psi
		TD1300	Factory spec.	245 ~ 441 kPa 2.5 ~ 4.5 kgf/cm² 35.5 ~ 64.0 psi
			Allowable limit	294.2 kPa 3.0 kgf/cm² 42.7 psi

(Reference)

Tightening torque	Oil pressure switch	14.7 ~ 19.6 N·m 1.5 ~ 2.0 kgf·m 10.8 ~ 14.5 lbf·ft

b. Oil filter

1. Drain the engine oil and remove the oil filter to check it.
2. Check the relief valve for dirt, and the seat (2) and ball (1) for damage.
3. If damaged, replace the filter.
4. Check the free length of spring (3).
5. If it is less than the allowable limit, replace it.

Spring free length	Factory spec	35 mm 1.38 in.
	Allowable limit	30 mm 1.18 in.

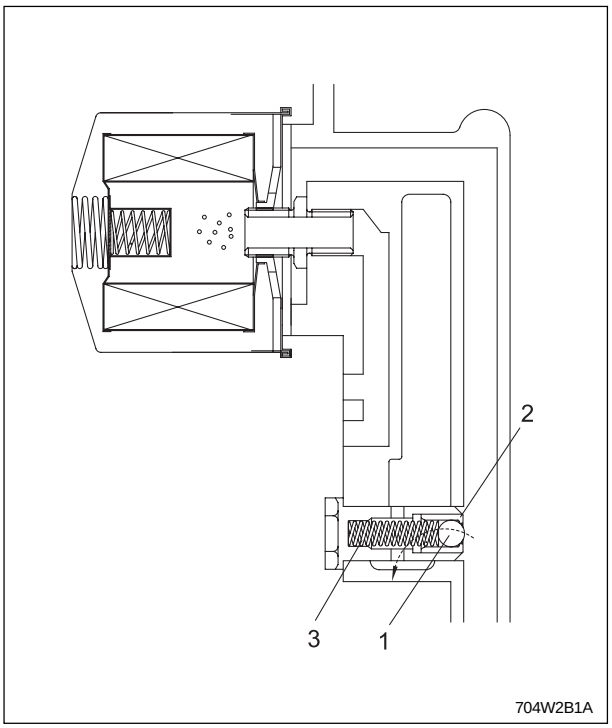

(1) Relief Valve Ball
(2) Relief Valve Seat
(3) Relief Valve Spring

B. SERVICING

a. Rotor and lobe clearance of oil pump

1. Measure the clearance between the outer and inner rotor with a feeler gauge.
2. Measure the clearance between the outer and the housing with a feeler gauge.
3. If the clearance exceeds the allowable limit, replace the pump.

Outer and inner rotor clearance	Factory spec.	0.10 ~ 0.16 mm 0.0039 ~ 0.0063 in.
	Allowable limit	0.20 mm 0.0079 in.
Outer and inner housing clearance	Factory spec.	0.11 ~ 0.19 mm 0.0043 ~ 0.0075 in.
	Allowable limit	0.25 mm 0.0098 in.

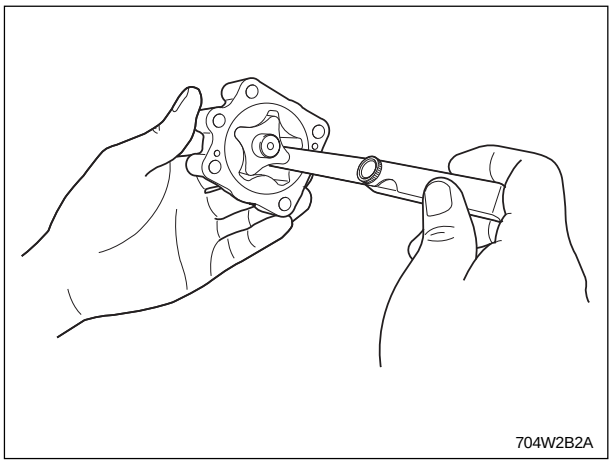
704W2B2A

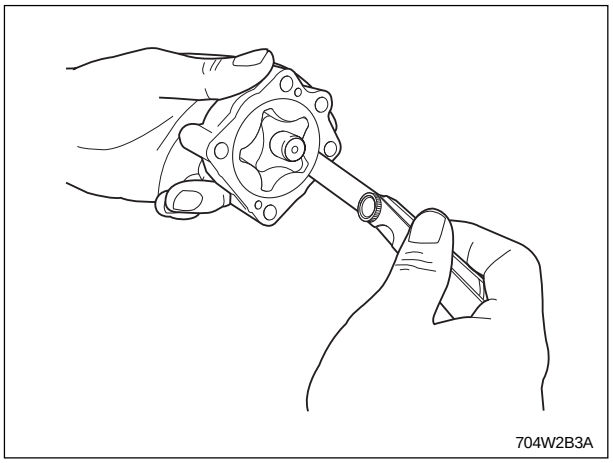
704W2B3A

b. Rotor end clearance of oil pump

1. Put a strip of plastigage on the rotor and assemble the pump.
2. Disassemble the pump and measure the amount of the flattening with the scale to get the clearance.
3. If the clearance exceeds the allowable limit, replace the pump.

End clearance	Factory spec.	0.105 ~ 0.150 mm 0.00413 ~ 0.00591 in.
	Allowable limit	0.20 mm 0.00781 in.

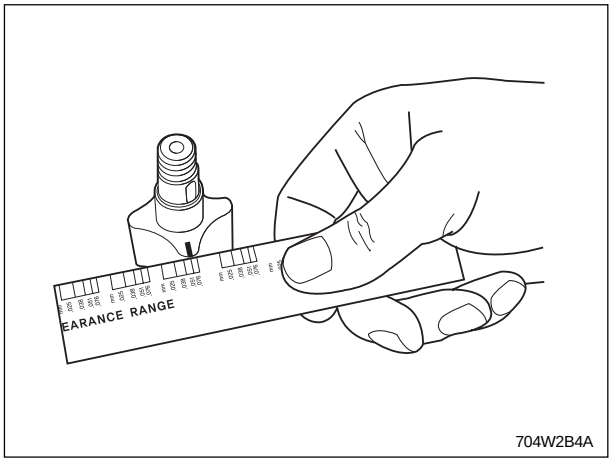

704W2B4A

7.5 COOLING SYSTEM

A. CHECKING ADJUSTING

a. Fan belt

1. Measure the deflection, depressing the belt half-way between the fan drive pulley and the alternator pulley at 78 N (8 kgf, 18 lbs) of force.
2. If the deflection is not between the factory specifications, loosen the bolts and nuts, and relocate the alternator to adjust.
3. If the belt is damaged or worn (See figure), replace the belt.

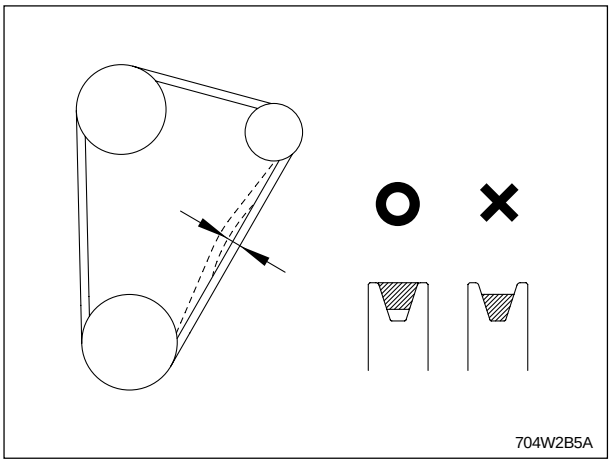

Belt tension (direction)	Factory spec	7 ~ 9mm 0.28 ~ 0.35 in.
		at 78 N (8 kgf, 18 lbs) of force

b. Radiator water tightness

1. Fill radiator with water to the specified amount and warm up the engine.
2. Set a radiator tester and raise the water pressure to the specified pressure.
3. Check the radiator for water leaks.
4. Pinhole water leaks may be repaired with radiator cement. Larger leaks require radiator replacement.

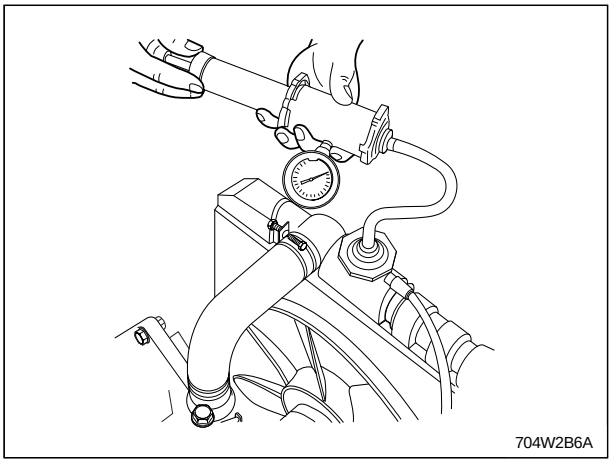

Radiator water tightness	Factory spec	No leaks at 137 kPa (1.4 kgf/cm², 20 psi)

c.Radiator cap tightness

1. Attach a radiator tester on the radiator cap.
2. Apply 88 kPa (0.9 kgf/cm², 13 psi) of pressure and measure the pressure for 10 seconds.
3. If the pressure falls below 59 kPa (0.6 kgf/cm², 9 psi), replace the radiator cap.

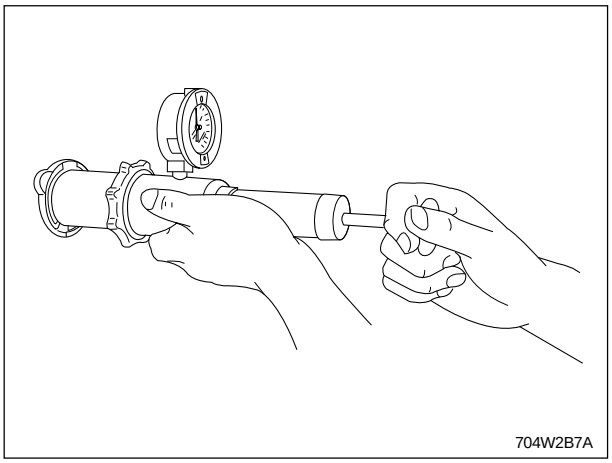

Radiator cap tightness	Factory spec	More than 10 seconds for pressure fall from 88 ~ 59 kPa (0.9 ~ 0.6 kgf/cm², 13 ~ 9 psi)

B. DISASSEMBLING AND ASSEMBLING

a. Thermostat

1. Remove the thermostat cover (2).
2. Take out the thermostat (1).

(When reassembling)

- Apply liquid gasket (Three Bond 1215 or equivalent) to the gasket.

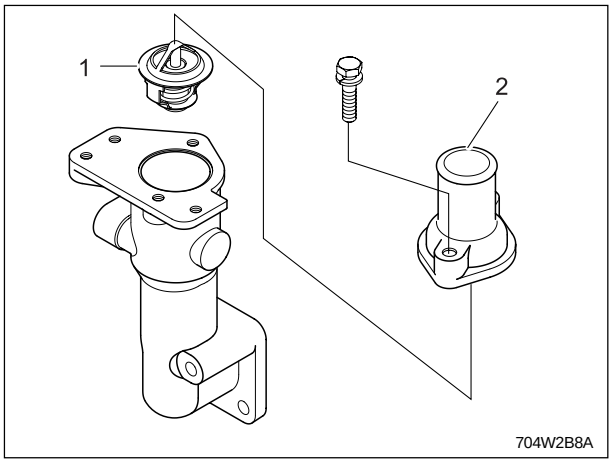

(1) Thermostat (2) Thermostat Cover

b. Water pump

1. Remove the fan and fan pulley.
2. Remove the water pump body from the gear case cover.
3. Remove the water pump flange (1).
4. Remove the impeller and water pump shaft (3).
5. Remove the impeller from the water pump shaft.
6. Remove the mechanical seal (4).

(When reassembling)

- Replace the mechanical seal (4) with new one.

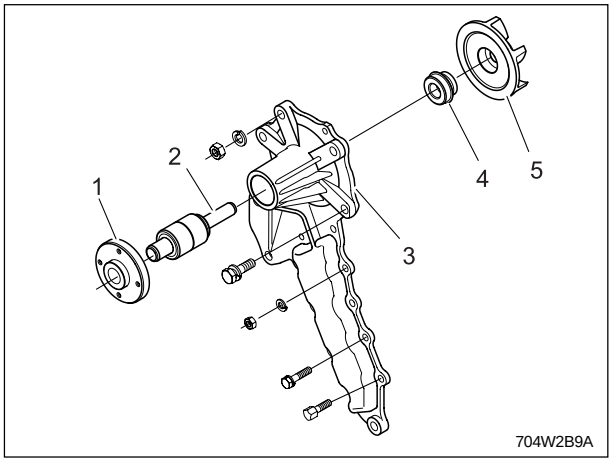

(1) Water Pump Flange (4) Mechanical Seal
(2) Water Pump Bearing (5) Impeller
(3) Water Pump Body

c. Servicing

(A) Thermostat valve opening temperature

1. Suspend the thermostat in the water by a string with its end inserted between the valve and seat.
2. Heating the water gradually, read the temperature when the valve opens and then when the valve opens to approx. 8 mm (0.315 in.).
3. If the measurements are not within the factory specifications, replace the thermostat.

Opening temperature	Factory spec.	71 ± 1.5 °C (160 ± 3 °F) at beginning
		Lower than 85 °C (185 °F) At 8 mm (0.315 in.) Of opening

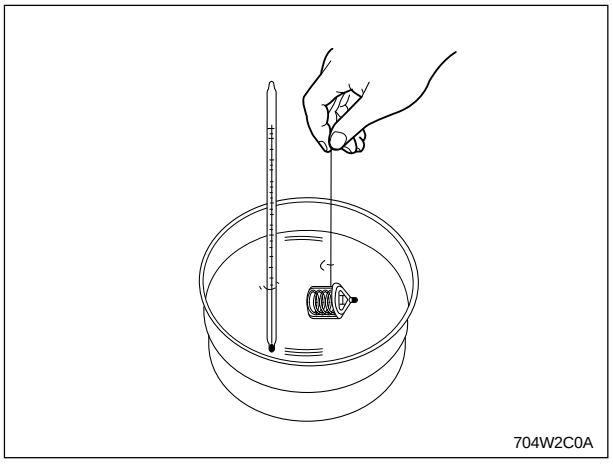

7.6 FUEL SYSTEM

A. CHECKING AND ADJUSTING

a. Injection pump

(A) Injection timing

1. Remove the injection pipes.
2. Set the speed control lever to the maximum fuel discharge position.
3. Turn the flywheel counterclockwise (facing the flywheel) until the fuel flow through to the hole of the delivery valve holder (1).
4. Continue to turn the flywheel until the fuel stops flowing. Check the injection timing.
5. If the Fl mark does not align with the mark of the window on flywheel housing, add or remove the shim(s) (2) to adjust.

Injection timing	3A150	0.31 rad, 18° before T.D.C
	TD1300	0.349 rad, 20° before T.D.C

NOTE:

- *Apply liquid gasket (There Bond 1215 or equivalent) to the shim, when reassembling.*

(Reference)

- The timing advances by removing 0.15 mm (0.006 in) of shim and retards by adding one, approx 0.26 rad (1.5 °) of crank angle.
- Approx 3.6 mm (0.142 in.) of turn at the outer rim of the flywheel equals 0.26 rad (1.5 °) of crank angle.

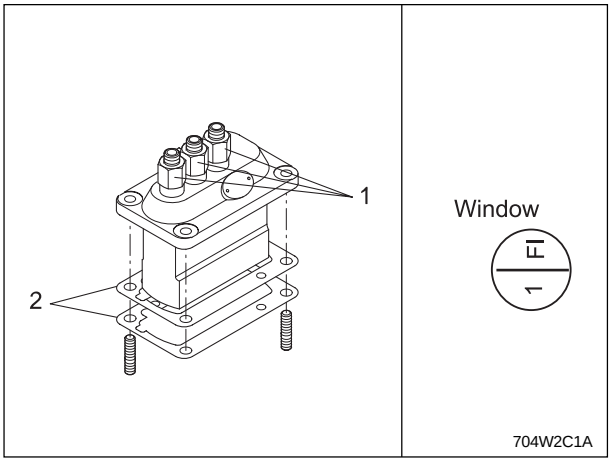

(1) Delivery Valve Holder (2) Shim

(B) Delivery valve fuel tightness

1. Remove the injection pipes, glow plugs and the inlet manifold, and install the pressure tester.
2. With the speed control lever at the fuel injection position, turn the crankshaft counterclockwise (facing the flywheel) until the pressure builds up to the fuel injection pressure.
3. Release the pressure in the delivery chamber by moving down the plunger to bottom dead center (turn the crankshaft clockwise approx. 1.57 rad (90 °) from the FI timing).
4. If the pressure drop for 5 seconds exceeds the allowable limit, replace the delivery valve or pump assembly.
5. If the pressure does not built up, replace the pump element with new one and test again.

Fuel Injection pressure	Factory spec.	14.71 MPa 150 kgf/cm² 2134 psi
Pressure drop	Allowable limit	0.98 MPa 10 kgf/cm² 142 psi

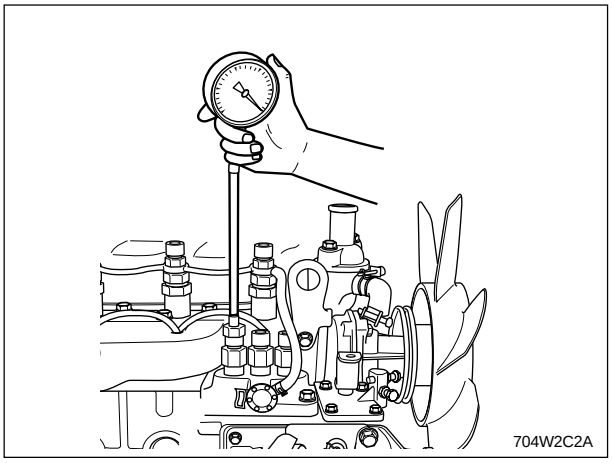

b. Injection nozzle

CAUTION

- *Never contact with spraying diesel fuel under pressure, pressure, which can have sufficient force to penetrate the skin, causing serious personal injury.*
- *Be sure nobody is in direction of the spray.*

(A) Fuel injection pressure

1. Set the injection nozzle to the nozzle tester.
2. Measure the injection pressure.
3. If the measurement is not within the factory specifications, adjust with the adjustment washer (1) inside the nozzle holder.

(Reference)

- Each adjustment washer of 0.1 mm (0.004 in.) will adjust the fuel injection pressure by approx. 10 kgf/cm².

Fuel injection pressure	Factory spec.	14.71 MPa 150 kgf/cm² 2134 psi

(B) Fuel tightness of needle valve seat tightness

1. Connect the injection nozzle to the nozzle tester.
2. Apply a pressure 130 kgf/cm² (12.75 MPa, 1849 psi). Keep the nozzle under this pressure for 10 seconds. Check to see if fuel leaks from the nozzle.
3. If the fuel should leak, replace the nozzle.

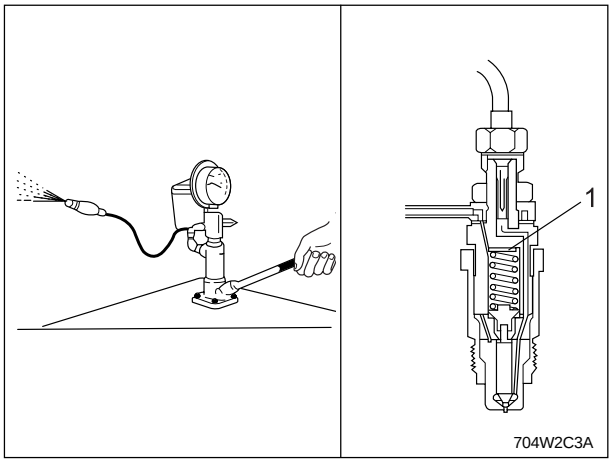
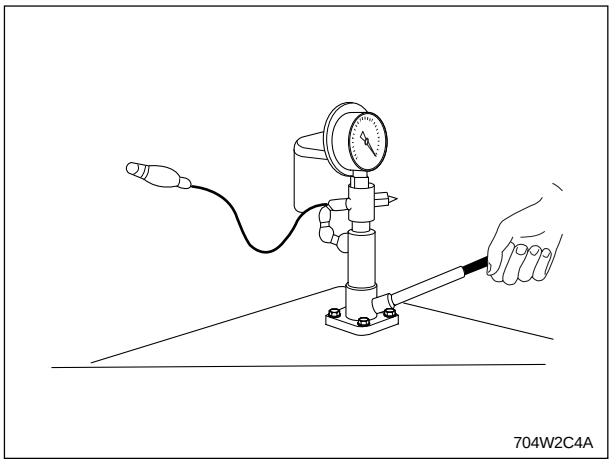
(1) Adjustment Washer