Directions for use of Parts Catalogue

1. Applicable model of machines

All component and option parts used for TMG18 tractors are listed in this parts catalogue.

NOTES : H·····HST

S·····INDEPENDENT PTO CLUTCH

V·····AUX VALVE

M·····MID PTO

U·····POWER STEERING

E42·····EUROPE AND OCEANIA WITH TURF TYPE

2. Explanation for head paragraph

KEY	PART CODE	DESCRIPTION	QTY	TYPE OF MODEL						ITC	COL	GRP	REMARKS
				TF15	TF17	TF19							
126	1614-508-200-00	FILTER(SUCTION) ASSY	1		*						4E		
127	V721-103-103-50	O-RING	1		*								
128	1614-508-260-00	FILTER(SUCTION) ASSY	1		*	981- -1799							
129	1614-508-262-00	FILTER(LH)	1	*	*	*							FIG. 164
		ASSY	1	*	*	*					4E	A	
			1	*	*	*							
					*	1- -1999				3			
						*							
										1	4E	A	

① ② ③ ④ ⑤ ⑥ ⑦ ⑧ ⑨ ⑩

① KEY shows the location of parts diagramed in the illustration.

② Parts numbers begin with `V´ and `W´ are standard parts of the market.

③ `LH´ and `RH´ on the parts name are described against the moving direction of the machine or are described on the condition how to install parts on the machines.

④ QTY shows the number of parts to be used for one unit of machine.

`M´ is indicated for parts supplied by a meter long.

`ℓ´ is indicated for parts supplied by liter.

`AR´ is indicated for parts need to be adjusted or regulated.

⑤ The following symbol classifies parts to be used for machines.

`*´ means standard parts.

`T´ shows that the parts can be installed as optional parts.

`R´ shows that the parts can be used as applicable parts to replace originally equipped parts.

⑥ Serial number : upper row shows the serial number for the first product and lower row for the last product.

Example : Serial no. 1 through to serial no. 1999.

⑦ ITC : Interchangeability

`1´…OLD ← NEW

New parts can be used in place of the old parts.

`2´…OLD → NEW

Old parts can be used in place of the new parts.

`3´…OLD →← NEW

Old parts and new parts can not be replaced each other.

⑧ COL : Color code

Color is signified with color code number for colored parts.

Please see the color list shown in the next page.

⑨ GRP : Parts shown in this column can be replaced by SET parts.

Exsample : Parts marked Ⓐ can be replaced by parts marked Ⓑ, and Ⓓ for Ⓒ, so the rest follow in the same alphabetical order.

⑩ Remarks

* Other maker's part code number is shown in this column.
* When Fig. No. is shown in the Remark column of SET parts or ASSY parts, each of their component parts are listed in said Fig. No.

3. Color :

The following colors are used for color parts.

COLOR CODE	COLOR	SPRAY TYPE CODE NUMBER	PAINTS 4K DRUM	PAINTS 16K DRUM
4 G	CRYSTAL BLUE	1300-957-001-10	1300-957-003-00	1300-957-004-00
5 I	SUNSET GRAY	1300-959-001-10	1300-959-003-00	1300-959-004-00
6 G	SUMMER WHITE	1300-958-001-10	1300-958-003-00	1300-958-004-00
7 F	MIRROR BLACK	1300-954-001-10	1300-954-003-00	1300-954-004-00
8 F	BRILLIANT BROWN METALLIC	1300-972-001-10	1300-972-003-00	1300-972-004-00

NOTE : Color code is signified only for the parts assigned by the maker as color parts.

4. Serial Numbers :

1) For engines serial number is stamped on CYLINDER BLOCK ASSY.
Please see Fig. No. 5 - 1.

2) For chassies serial number is shown on the LABEL.
Please see

5. Parts Order

1) Parts numbers listed in the parts catalogue are all registered in "ISEKI on-line computer".

2) When you order parts, please make sure of correct numbers.

3) When substitute parts is available, the part number ordered will be automatically turned to a new part number.

4) Please be sure to use "ISEKI GENUINE PARTS".

Any other similar parts other than ISEKI parts when used may cause a trouble that makes us unable to repair or guarantee the warrant.

P. 1 *** STRUCTURE TABLE OF MODEL ***

MODEL / FIG	TM GHHHH 1MSSV 8UMVM EEMU 44EE 2244 22										
1	****										
2	****										
3	****										
4	****										
5	****										
6	****										
7	****										
8	* *										
9	**										
10	* *										
11	* *										
12	**										
13	****										
14	* *										
15	**										
16	****										
17	****										
18	****										
19	* *										
20	**										
21	* *										
22	**										
23	* *										
24	**										
25	****										
26	****										
27	* *										
28	**										
29	****										
30	****										
31	****										
32	****										
33	****										
34	****										
35	****										
36	****										
37	****										
38	* *										
39	**										
40	****										
41	****										
42	****										
43	**										
44	**										
45	**										

P. 2 *** STRUCTURE TABLE OF MODEL ***

FIG \ MODEL	TMGHHHH1MSSV8UMVM EEMU 44EE 2244 22										
46	**										
47	****										
48	****										
49	****										
50	****										
51	****										
52	****										
53	****										
54	****										
55	****										
56	****										
57	****										
58	*										
59	*										
60	*										
61	*										
62	***										
63	*										
64	****										
65	*										
66	*										
67	**										
68	TTTT										
69	TTTT										
70	TTTT										
71	TTTT										
72	TTTT										
73	TTTT										
74	TTTT										
75	TTTT										
76	****										
77	**										
78	* *										
79	**										
80	**										

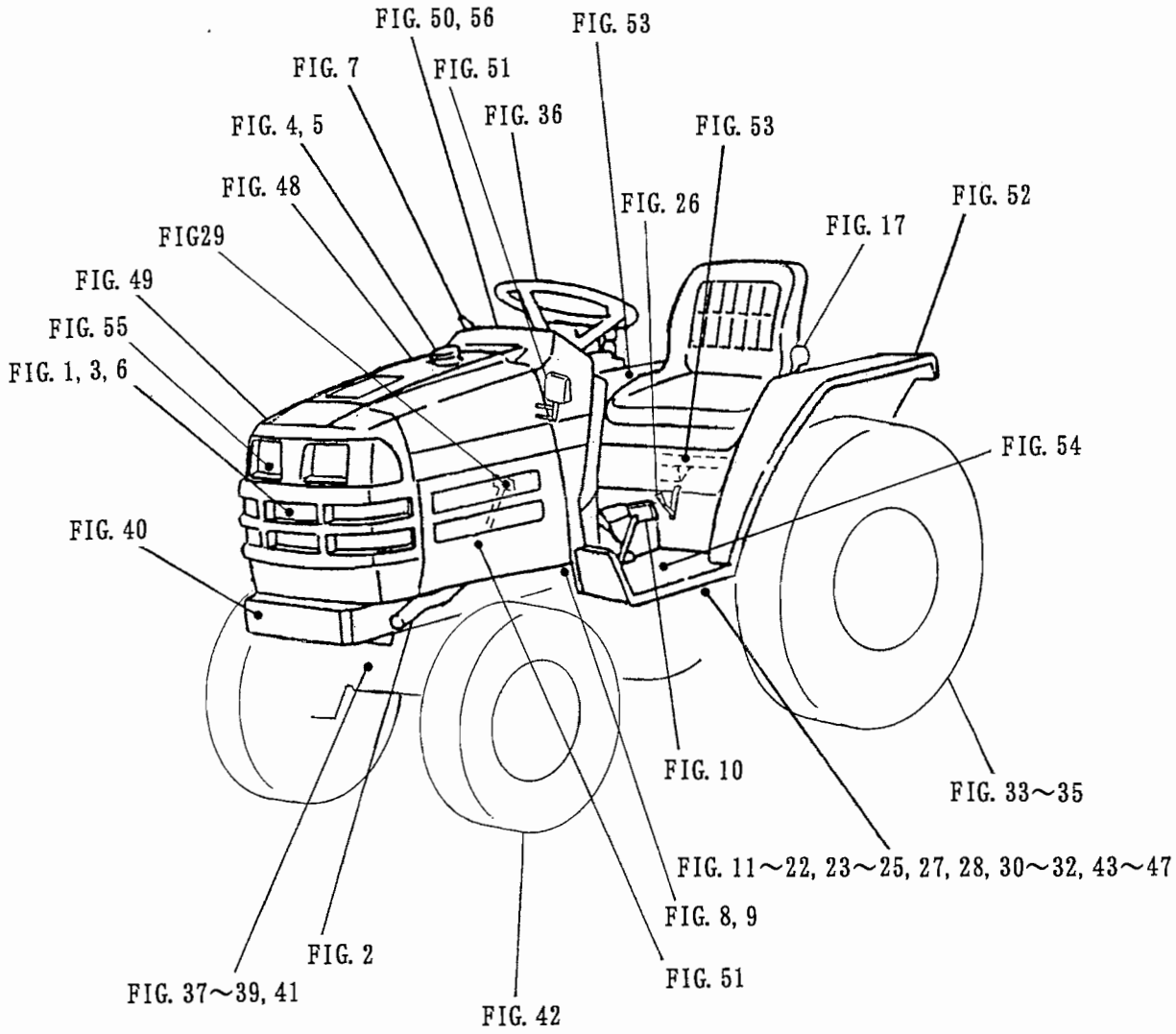
FIG. 50, 56
FIG. 53
FIG. 7
FIG. 51
FIG. 36
FIG. 4, 5
FIG. 53
FIG. 48
FIG. 26
FIG. 52
FIG. 17
FIG29
FIG. 49
FIG. 55
FIG. 1, 3, 6
FIG. 54
FIG. 40
FIG. 10
FIG. 33～35
FIG. 11～22, 23～25, 27, 28, 30～32, 43～47
FIG. 8, 9
FIG. 2
FIG. 51
FIG. 37～39, 41
FIG. 42

CONTENTS

TMG18-EXCEPT S TYPE
ENGINE (E393-G)

CYLINDER HEAD ..... Fig. 1
CYLINDER HEAD COVER ..... Fig. 2
INLET MANIFOLD ..... Fig. 3
EXHAUST MANIFOLD ..... Fig. 4
CYLINDER BLOCK ..... Fig. 5
BEARING (UNDER SIZE (OPTION)) ..... Fig. 6
OIL PAN ..... Fig. 7
REAR PLATE ..... Fig. 8
TIMING GEAR CASE ..... Fig. 9
HANGER ..... Fig. 10
VALVE ..... Fig. 11
CAM SHAFT ..... Fig. 12
PISTON ..... Fig. 13
PISTON OVER SIZE (OPTION) ..... Fig. 14
CRANK SHAFT ..... Fig. 15
OIL PUMP ..... Fig. 16
WATER PUMP ..... Fig. 17
COOLING FAN ..... Fig. 18
INJECTION NOZZLE ..... Fig. 19
INJECTION PUMP ..... Fig. 20
FUEL PIPE ..... Fig. 21
ELECTRIC (1) ..... Fig. 22
ELECTRIC (2) ..... Fig. 23
COMPONENT PARTS FOR 6215 300-307-32 ON Fig.19 ..... Fig. 24
COMPONENT PARTS FOR 6215 600-109-10 ON Fig.20 ..... Fig. 25
COMPONENT PARTS FOR 6281 100-005-00 ON Fig.22 ..... Fig. 26
COMPONENT PARTS FOR 6281 200-005-00 ON Fig.22 ..... Fig. 27

CONTENTS

TMG18 S TYPE

ENGINE (E393-G01)

CYLINDER HEAD ..... Fig. 1
CYLINDER HEAD COVER ..... Fig. 2
INLET MANIFOLD ..... Fig. 3
EXHAUST MANIFOLD ..... Fig. 4
CYLINDER BLOCK ..... Fig. 5
BEARING, UNDER SIZE (OPTION) ..... Fig. 6
OIL PAN ..... Fig. 7
REAR PLATE ..... Fig. 8
TIMING GEAR CASE ..... Fig. 9
HANGER ..... Fig. 10
VALVE ..... Fig. 11
CAM SHAFT ..... Fig. 12
PISTON ..... Fig. 13
PISTON, OVER SIZE (OPTION) ..... Fig. 14
CRANK SHAFT ..... Fig. 15
OIL PUMP ..... Fig. 16
WATER PUMP ..... Fig. 17
COOLING FAN ..... Fig. 18
INJECTION NOZZLE ..... Fig. 19
INJECTION PUMP ..... Fig. 20
FUEL PIPE ..... Fig. 21
ELECTRIC (1) ..... Fig. 22
ELECTRIC (2) ..... Fig. 23
COMPONENT PARTS FOR 6215-300-037-00 ON Fig.19 ..... Fig. 24
COMPONENT PARTS FOR 6215-600-109-10 ON Fig.20 ..... Fig. 25
COMPONENT PARTS FOR 6281-100-005-00 ON Fig.22 ..... Fig. 26
COMPONENT PARTS FOR 6281-200-005-00 ON Fig.22 ..... Fig. 27

CONTENTS

CHASSIS

RADIATOR SYSTEM ..... Fig. 1
MUFFLER SYSTEM ..... Fig. 2
AIR CLEANER SYSTEM ..... Fig. 3
FILTER SYSTEM ..... Fig. 4
FUEL TANK SYSTEM ..... Fig. 5
BATTERY SYSTEM ..... Fig. 6
ACCELERATOR SYSTEM ..... Fig. 7
CLUTCH SYSTEM (EXCEPT S TYPE) ..... Fig. 8
CLUTCH SYSTEM (S TYPE) ..... Fig. 9
CLUTCH PEDAL SYSTEM (EXCEPT S TYPE) ..... Fig. 10
TRANSMISSION CASE SYSTEM (EXCEPT S TYPE) ..... Fig. 11
TRANSMISSION CASE SYSTEM (S TYPE) ..... Fig. 12
HST SYSTEM ..... Fig. 13
DRIVE GEAR SYSTEM (EXCEPT S TYPE) ..... Fig. 14
DRIVE GEAR SYSTEM (S TYPE) ..... Fig. 15
2WD GEAR SYSTEM ..... Fig. 16
SUB LEVER SYSTEM ..... Fig. 17
SUB CHANGE SYSTEM ..... Fig. 18
PTO GEAR SYSTEM (EXCEPT S TYPE) ..... Fig. 19
PTO GEAR SYSTEM (S TYPE) ..... Fig. 20
PTO SHAFT SYSTEM (EXCEPT S TYPE) ..... Fig. 21
PTO SHAFT SYSTEM (S TYPE) ..... Fig. 22
PTO LEVER SYSTEM (EXCEPT S TYPE) ..... Fig. 23
PTO LEVER SYSTEM (S TYPE) ..... Fig. 24
MID PTO SYSTEM ..... Fig. 25
MID PTO LEVER SYSTEM ..... Fig. 26
LINK SYSTEM (EXCEPT S TYPE) ..... Fig. 27
LINK SYSTEM (S TYPE) ..... Fig. 28
PEDAL SYSTEM ..... Fig. 29
PIPING SYSTEM ..... Fig. 30

DIFFERENTIAL GEAR SYSTEM ..... Fig. 31
REAR AXLE SYSTEM ..... Fig. 32
WHEEL SHAFT AND REAR WHEEL (TURF) SYSTEM ..... Fig. 33
HST BRAKE SYSTEM ..... Fig. 34
BRAKE SYSTEM ..... Fig. 35
STEERING SYSTEM ..... Fig. 36
CYLINDER SYSTEM ..... Fig. 37
PIPING SYSTEM (EXCEPT S TYPE) ..... Fig. 38
PIPING SYSTEM (S TYPE) ..... Fig. 39
AXLE BRACKET AND BUMPER SYSTEM ..... Fig. 40
2WD AXLE SYSTEM ..... Fig. 4.
FRONT TIRE SYSTEM ..... Fig. 42
PLATE CASE SYSTEM (EXCEPT V TYPE) ..... Fig. 43
PLATE CASE SYSTEM (V TYPE) ..... Fig. 44
VALVE SYSTEM (S TYPE) ..... Fig. 45
STACK VALVE SYSTEM (V TYPE) ..... Fig. 46
MAIN PIPING SYSTEM ..... Fig. 47
HOOD SYSTEM ..... Fig. 48
GRILLE SYSTEM ..... Fig. 49
DASH COVER SYSTEM ..... Fig. 50
SIDE COVER AND MIRROR SYSTEM ..... Fig. 51
FENDER SYSTEM ..... Fig. 52
LEVER GUIDE AND SEAT BRACKET SYSTEM ..... Fig. 53
STEP SYSTEM ..... Fig. 54
LAMP SYSTEM ..... Fig. 55
PANEL SYSTEM ..... Fig. 56
SWITCH SYSTEM ..... Fig. 57
SWITCH SYSTEM (EXCEPT S,V TYPE) ..... Fig. 58
SWITCH SYSTEM (V TYPE EXCEPT S) ..... Fig. 59
SWITCH SYSTEM (S TYPE EXCEPT V) ..... Fig. 60
SWITCH SYSTEM (SV TYPE) ..... Fig. 61
HARNESS SYSTEM (S,V TYPE) ..... Fig. 62
HARNESS SYSTEM (EXCEPT S,V TYPE) ..... Fig. 63
ORNAMENT LABEL ..... Fig. 64

LABEL (CONTROL) (EXCEPT S,V TYPE) ..... Fig. 65
LABEL (CONTROL) (V TYPE EXCEPT S) ..... Fig. 66
LABEL (CONTROL) (S TYPE) ..... Fig. 67
LABEL (ENGLISH) (OPTION) ..... Fig. 68
LABEL (FRENCH) (OPTION) ..... Fig. 69
LABEL (GERMAN) (OPTION) ..... Fig. 70
LABEL (PORTUGAL) (OPTION) ..... Fig. 71
LABEL (E40A) (OPTION) ..... Fig. 72
LABEL (E40T) (OPTION) ..... Fig. 73
LABEL (DUTCH) (OPTION) ..... Fig. 74
LABEL (E40V) (OPTION) ..... Fig. 75
TOOL ..... Fig. 76

COMPONENT PARTS

COMPONENT PARTS FOR K200 – 053 – 000 – 00 ON ..... Fig. 45 ..... Fig. 77
COMPONENT PARTS FOR K233 – 003 – 000 – 00 ON ..... Fig. 38 ..... Fig. 78
COMPONENT PARTS FOR K233 – 006 – 000 – 00 ON ..... Fig. 39 ..... Fig. 79
COMPONENT PARTS FOR 1688 – 211 – 500 – 00 ON ..... Fig. 20 ..... Fig. 80

WIRING DIAGRAM (E4) (1)
WIRING DIAGRAM (E4) (2)
WIRING DIAGRAM (E4) (3)
WIRING DIAGRAM (E4／G／SV) (1)
WIRING DIAGRAM (E4／G／SV) (2)
WIRING DIAGRAM (E4／G／SV) (3)

ENGINE

E393-G…TMG18

(EXCEPT S)

6003 - 097 - 180 - 00

FIG. 1 CYLINDER HEAD

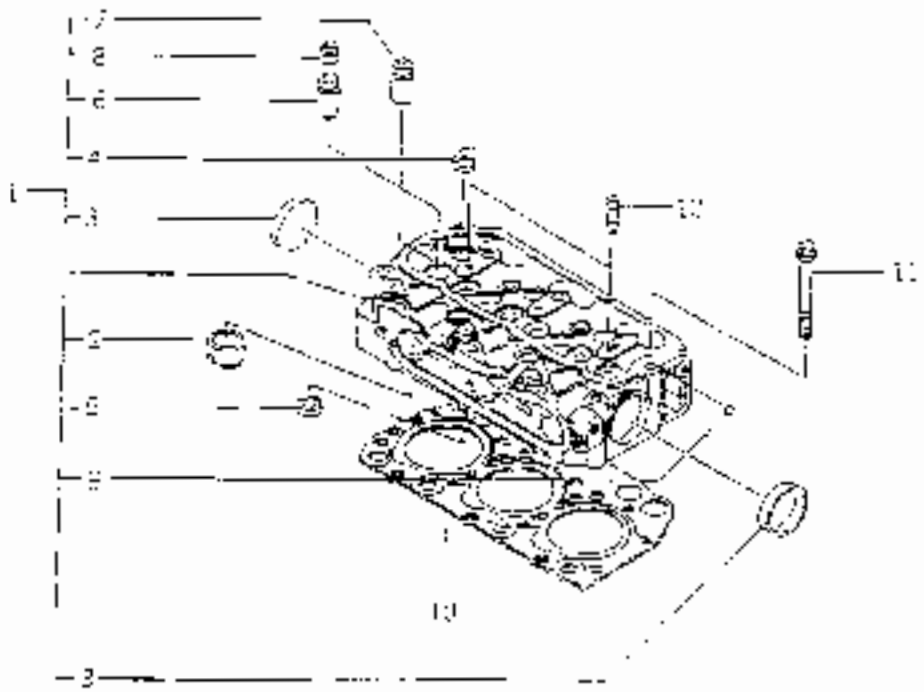

NOTE

KEY	PART CODE	DESCRIPTION	QTY	TYPE OF MODEL E3930	TOOL	REMARKS
1	6211 110 - 000 - 20	CYLINDERHEAD ASSY				
2	6211 150 - 008 - 00	PLUG (HOT) ASSY	4			
3	6211 179 - 006 - 00	GASKETING	2			
4	6208 - 805 - 004 - 00	PLUG/PIT/2	5			
5	6211 - 715 - 002 - 00	SEATVALVE	2			
6	6211 - 721 - 001 - 00	GUIDE GUIDE	3			
7	6211 721 002 00	GUIDEVALVE	3			
8	6211 - 504 - 002 - 00	SEAL OIL	5			
9	V083 200 000 00	BALL				
10	6211 141 - 008 - 20	GASKETCYLINDERHEAD	1			
11	5209 000 - 003 - 00	BOLT/M10X128A32	14			
12	6909 - 830 - 212 00	STUDHEAD COVER	2			

FIG. 2 CYLINDER HEAD COVER

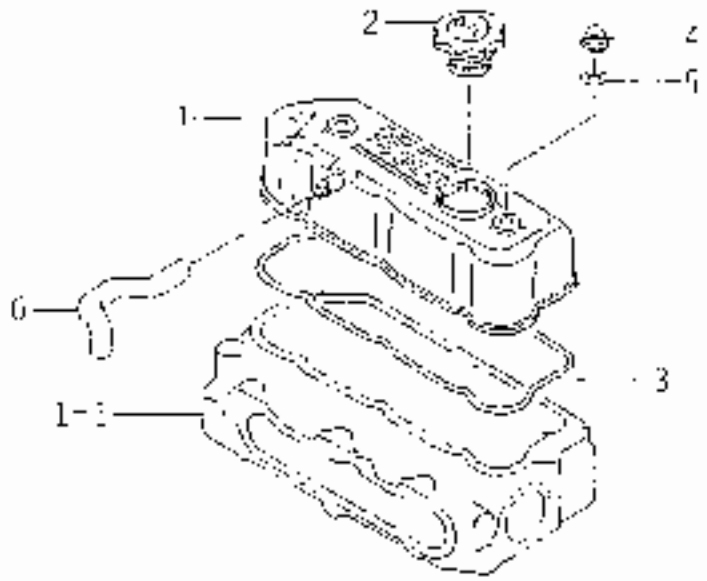

KEY	PART CODE	DESCRIPTION	QTY	TYPE OF MODEL		I T C	C O L	S R F	REMARKS
	6211 - 70 - 004 - 10	COVER CYLINDER HEAD	1						
2	6211 - 751 - 001 - 10	CAPOIL FILLER	1						
3	6211 - 173 - 003 - 00	SEAL CYL HEAD COVER	1						
4	0209 - 400 - 002 - 00	NUT CAP	2						
5	5909 - 572 - 000 - 00	PACKING	2						
6	5709 - 350 - 020 - 10	HOSE/RUBBER	1						

FIG. 3 INLET MANIFOLD

KEY	PART CODE	DESCRIPTION	QTY	TYPE OF MODEL (CODE)				REMARKS
1	6214 - 111 - 0[illegible] 20	MANIFOLD INLET ASSY	1					
2	6214 115 - 00[illegible] 20	GASKET INLET MANIFOLD	1					
3	[illegible]	[illegible]	[illegible]					
4	3901 - 510 - 840 00	[illegible]	1					

FIG. 4 EXHAUST MANIFOLD

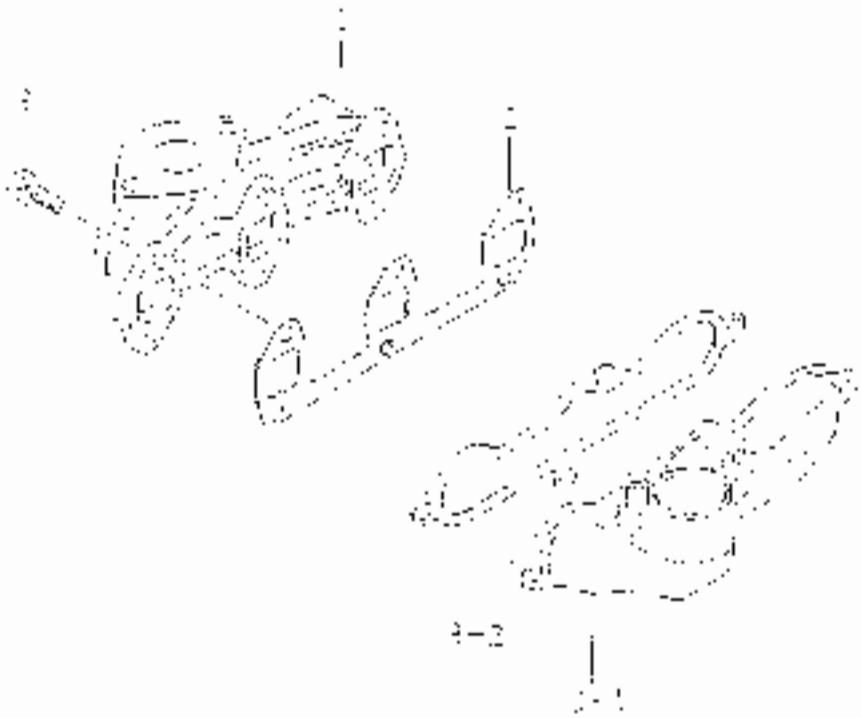

KEY	PART CODE	DESCRIPTION	QTY	TYPE OF MODEL				REMARKS
					LTC	COL	GRP	
1	8214 - 141 - 610 - 10	MANIFOLD,EXH						
2	8214 - 175 - 001 - 80	GASKET,EXH.MANIFOLD						
3	V211 - 560 - 802 - 50	BOLT,SEMS (WASHER)	6					

FIG. 5 CYLINDER BLOCK

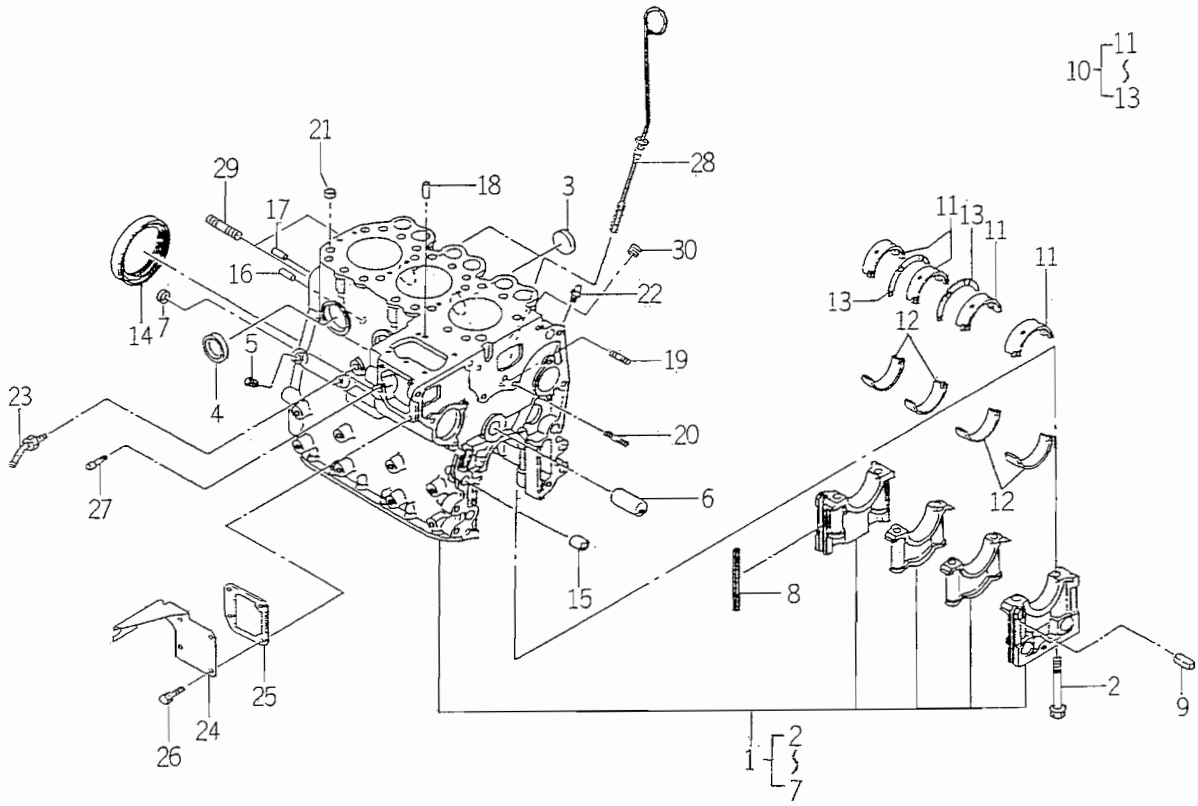

6003-201Y

KEY	PART CODE	DESCRIPTION	QTY	TYPE OF MODEL E393G		ITC	COL	GRP	REMARKS
1	6211 - 210 - 050 - 10	CYLINDERBLOCK ASSY	1	*					
2	6209 - 000 - 004 - 10	BOLT	8	*					
3	6209 - 610 - 001 - 00	CAP,SEALING	2	*					
4	6911 - 219 - 195 - 00	CAP,SEALING	4	*					
5	6509 - 605 - 019 - 10	PLUG	3	*					
6	6212 - 531 - 005 - 10	PIN/IDLEGEAR	1	*					
7	6911 - 129 - 083 - 00	CAP,SEALING	1	*					
8	6211 - 258 - 001 - 00	SEAL,BEARING CAP	4	*					
9	6211 - 258 - 002 - 00	SEAL,BEARING CAP/7	2	*					
10	6211 - 510 - 001 - 00	METAL,CRANK SET	1	*					
11	6211 - 511 - 003 - 00	BEARING/CRANK/UPPER	4	*					
12	6211 - 511 - 004 - 00	BEARING/CRANK/LOWER	4	*					
13	6211 - 599 - 001 - 10	BEARING,THRUST CRANK	2	*					
14	6209 - 625 - 001 - 00	SEAL,OIL	1	*					
15	6209 - 749 - 001 - 10	PIN,TUBE	2	*					
16	6908 - 160 - 816 - 00	PIN	1	*					
17	V523 - 100 - 802 - 40	PIN	1	*					
18	6908 - 160 - 510 - 00	PIN	2	*					
19	6904 - 110 - 818 - 00	STUD	1	*					
20	6904 - 110 - 840 - 00	STUD/M8X40	1	*					
21	6294 - 453 - 002 - 00	DOWEL	2	*					
22	6909 - 902 - 299 - 00	NIPPLE	1	*					
23	6213 - 721 - 007 - 00	PIPE/WATERDRAIN	1	*					
24	6211 - 291 - 016 - 00	COVER/INJECTIONPUMP	1	*					
25	6211 - 292 - 001 - 20	GASKET/COVER	1	*					

FIG. 5 CYLINDER BLOCK

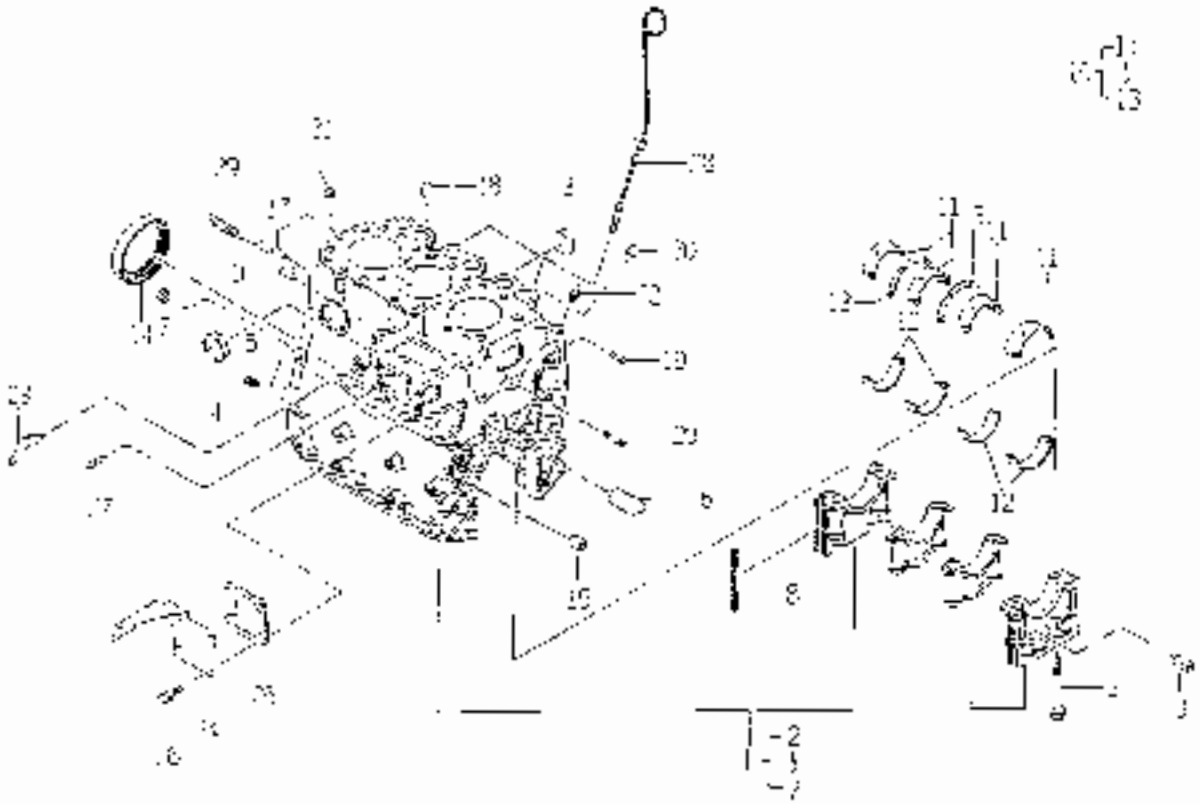

KEY	PART CODE	DESCRIPTION	QTY	TYPE OF MODEL CODE	I T C	C O T	G R P	REMARKS
26	F901 910 - 014 - 00	[illegible]	2					
27	8210 - 549 301 - 10	HOLDER SPRING	1					
28	8211 - 750 312 20	TIMING GEAR	1					
29	8209 - 300 - 313 - 00	STUD	2					
30	8200 - 303 - 305 - 0	PLUG PT3/4	1					

FIG. 6 BEARING/UNDER SIZE (OPTION)

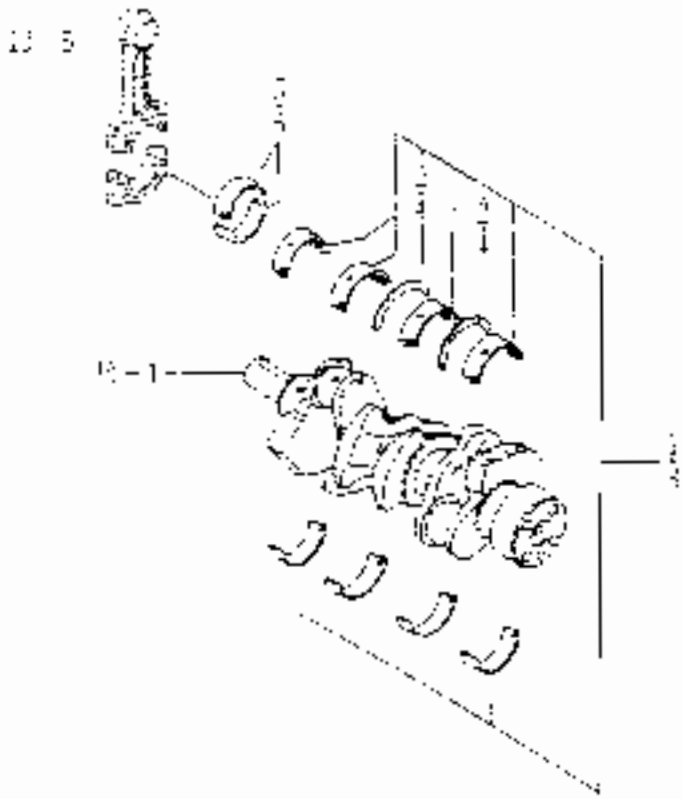

KEY	PART CODE	DESCRIPTION	QTY	TYPE OF MODEL				REMARKS
					ITC	COL	GRP	
1	62[illegible]-640-00[illegible]-00	ML A/CRANK SET	1	T				
2	62[illegible]-530-00[illegible]-10	BEARING/THRUST CRANK	2	T			1	
3	62[illegible]-500-00[illegible]-00	MFTA CRANK SET	1	T				
4	62[illegible]-699-00[illegible]-10	BEARING/THRUST CRANK	2	T				
5	6212-264-005-00	BEARING/CONN ROD (UN	6	T				
6	6212-200-000-00	BEARING/CONN ROD (UN	6	T				

FIG. 7 OIL PAN

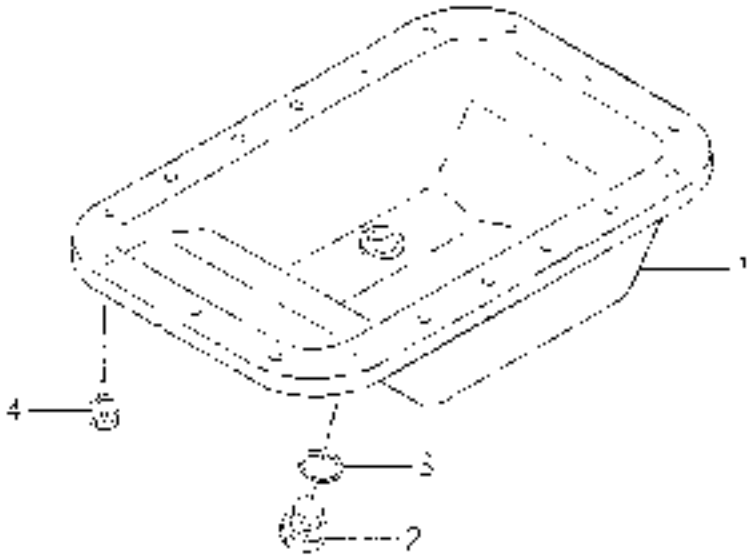

KEY	PART CODE	DESCRIPTION	QTY	TYPE OF MODEL		I C O	S H P	REMARKS
				F3B36				
1	5211 - 351 - 010 - 10	PAN,OIL COLF	1	•				
2	3873 - 301 - 002 - 00	PLUG 3M(M)X15	1	•				
3	5728 - 102 - 401 - 00	O-RING, P18	1	•				
4	6901 - 012 - 012 - 00	BOLT,SEMS/M5X12	18	•				

FIG. 8 REAR PLATE

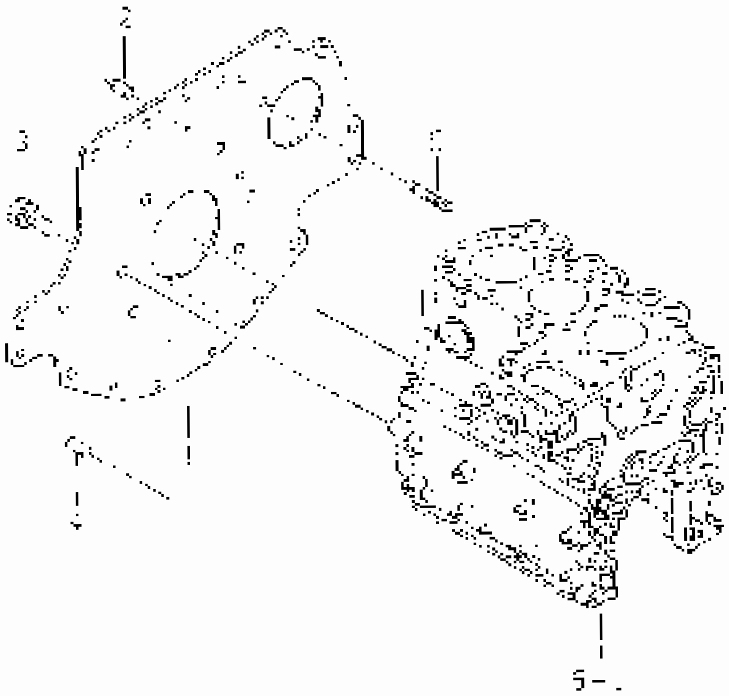

KEY	PART CODE	DESCRIPTION	QTY	TYPE OF MODEL [illegible]	I T C	C O L	G R P	REMARKS
1	821[illegible] - 341 - 032 - 00	PLATE/REAR	1	•				
2	821[illegible] - 342 - 002 - 10	POINTER	1	•				
3	690 - 91[illegible] - 020 - 00	BOLT,[illegible]	5	•				
4	0009 - 10[illegible] - 516 - 00	PIN	[illegible]	•				
5	5209 - 3[illegible] - 004 - 00	[illegible]	1	•				

FIG. 9 TIMING GEAR CASE

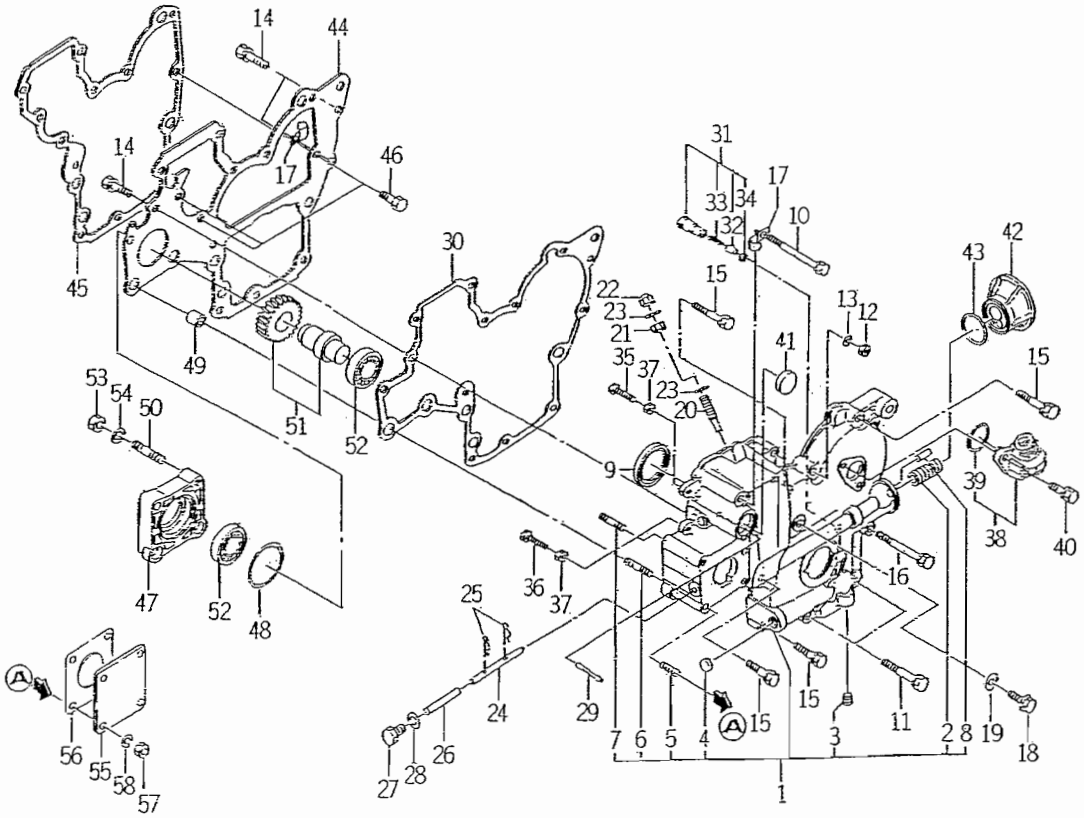

6003-240H

KEY	PART CODE	DESCRIPTION	QTY	TYPE OF MODEL E393G		ITC	COL	GRP	REMARKS
1	6211 - 310 - 021 - 00	GEARCASE ASSY	1	*					
2	6213 - 319 - 004 - 00	CONNECTOR/OILFILTER	1	*					
3	6509 - 605 - 019 - 10	PLUG	1	*					
4	6209 - 610 - 002 - 10	CUP/SEALING/16	1	*					
5	6904 - 110 - 822 - 00	STUD	4	*					
6	6904 - 110 - 855 - 00	STUD	2	*					
7	6904 - 110 - 850 - 00	STUD	1	*					
8	6908 - 160 - 510 - 00	PIN	1	*					
9	6209 - 625 - 002 - 00	SEAL,OIL	1	*					
10	6209 - 030 - 005 - 00	BOLT/M8X85	1	*					
11	6509 - 000 - 084 - 00	BOLT/L = 55	2	*					
12	6909 - 110 - 508 - 00	NUT/M8	1	*					
13	6909 - 150 - 508 - 00	WASHER	1	*					
14	V211 - 560 - 802 - 00	BOLT/M8X20	3	*					
15	6901 - 910 - 845 - 00	BOLT,SEMS/M8X45	5	*					
16	6209 - 030 - 006 - 00	BOLT/M8X75	1	*					
17	1425 - 621 - 004 - 00	CLAMP,HARNESS	2	*					
18	6209 - 046 - 001 - 00	BOLT/M8X30	1	*					
19	6209 - 500 - 003 - 00	WASHER/08X14X01	1	*					
20	6215 - 546 - 003 - 00	STOPPER/FULLLOAD	1	*					
21	6209 - 409 - 001 - 00	NUT/M8	1	*					
22	V341 - 120 - 008 - 00	NUT,CAP/M 8	1	*					
23	6909 - 920 - 843 - 00	PACKING	2	*					
24	6215 - 542 - 004 - 20	PIN/ARM	1	*					
25	P117 - 303 - 003 - 00	PIN/SNAP	2	*					

FIG. 9 TIMING GEAR CASE

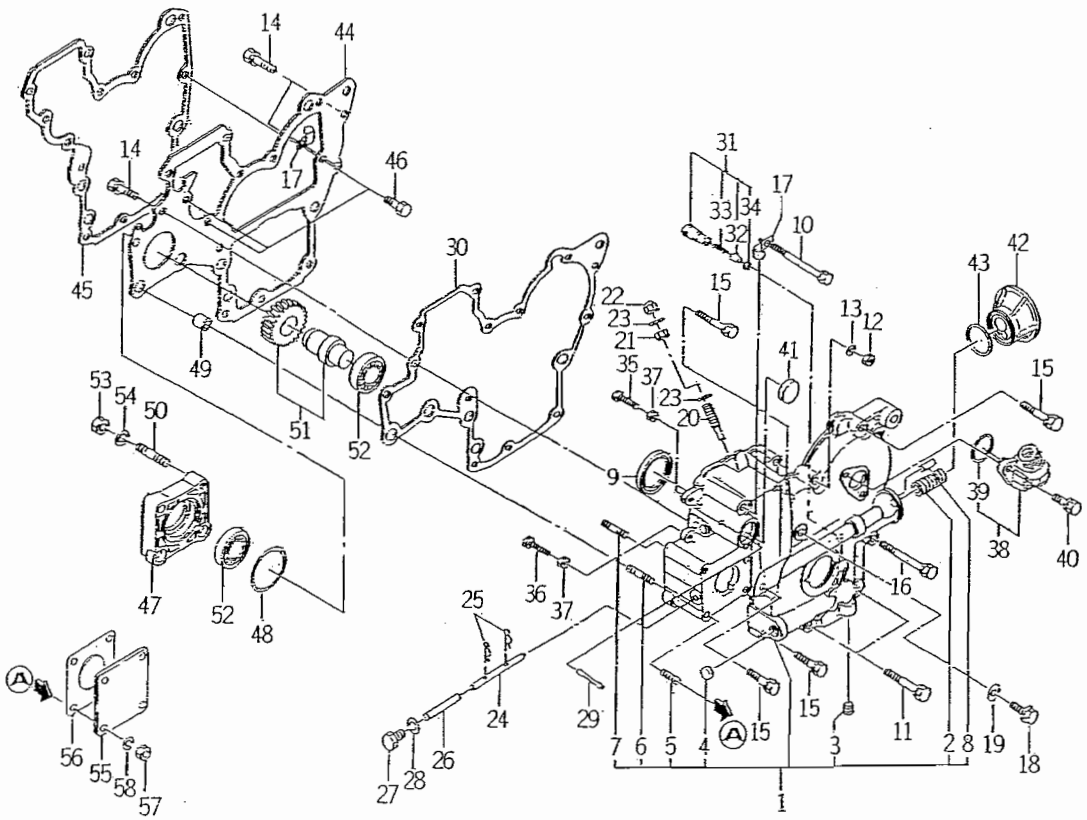

60C3-240H

KEY	PART CODE	DESCRIPTION	QTY	TYPE OF MODEL E393G		ITC	COL	GRP	REMARKS
26	6215 - 542 - 005 - 00	PIN	1	*					
27	6909 - 202 - 308 - 00	PLUG	1	*					
28	6209 - 500 - 003 - 00	WASHER/08X14X01	1	*					
29	6209 - 740 - 001 - 00	PIN,GROOVE	1	*					
30	6211 - 312 - 003 - 10	GASKET,GEAR CASE	1	*					
31	6213 - 160 - 002 - 00	VALVE/RELIEF ASSY	1	*					
32	6213 - 161 - 001 - 00	PISTON/RELIEF VALVE	1	*					
33	6213 - 164 - 001 - 00	SPRING/RELIEF VALVE	1	*					
34	V705 - 140 - 012 - 00	RING,SNAP/12 C	1	*					
35	6209 - 050 - 001 - 00	BOLT/M6	1	*					
36	6209 - 050 - 002 - 00	BOLT/M6	1	*					
37	6909 - 110 - 406 - 00	NUT	2	*					
38	6219 - 310 - 003 - 10	DRIVE/TACHOMETE ASSY	1	*					
39	V723 - 102 - 002 - 40	RING/O	1	*					
40	6901 - 910 - 616 - 00	BOLT,SEMS/M6X16	2	*					
41	3625 - 540 - 004 - 00	CAP,BLANK/30	1	*					
42	6213 - 211 - 001 - 10	SPACER,OIL FILTER	1	*					
43	V723 - 102 - 003 - 60	O - RING	1	*					
44	6211 - 311 - 011 - 00	PLATE FRONT	1	*					
45	6211 - 312 - 002 - 20	GASKET/PLATE	1	*					
46	6902 - 050 - 816 - 00	BOLT	3	*					
47	6211 - 319 - 003 - 00	SPACER	1	*					
48	V723 - 102 - 005 - 00	O - RING 1A S50	1	*					
49	6209 - 749 - 001 - 10	PIN,TUBE	2	*					
50	6904 - 110 - 822 - 00	STUD	1	*					

FIG. 9 TIMING GEAR CASE

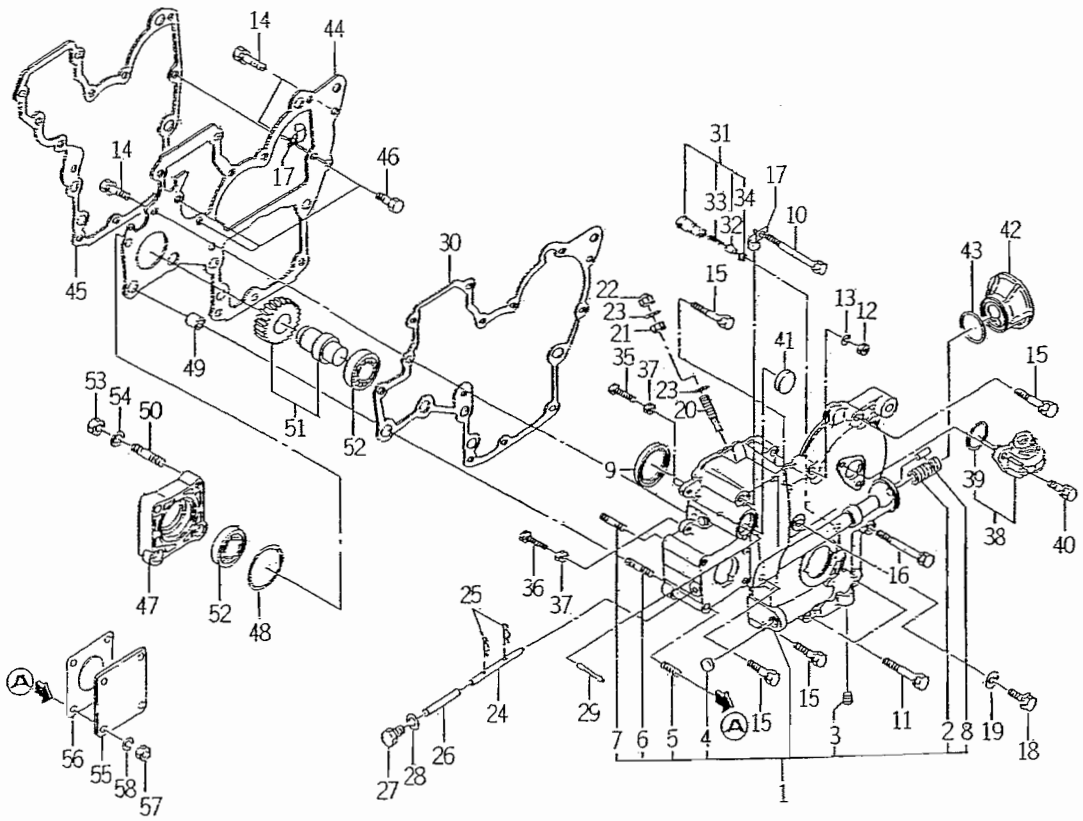

6003-240H

KEY	PART CODE	DESCRIPTION	QTY	TYPE OF MODEL E393G	TYPE OF MODEL	ITC	COL	GRP	REMARKS
51	6212 - 530 - 005 - 10	SHAFT/HYDRAULIC ASSY	1	*					
52	V600 - 110 - 600 - 50	BEARING,RB/6005	2	*					
53	6909 - 110 - 408 - 00	NUT/M8	4	*					
54	6909 - 150 - 508 - 00	WASHER	4	*					
55	6511 - 321 - 083 - 00	COVER	1	*					
56	6211 - 322 - 002 - 00	GASKET/COVER	1	*					
57	6909 - 110 - 408 - 00	NUT/M8	4	*					
58	6909 - 150 - 508 - 00	WASHER	4	*					

FIG. 10 HANGER

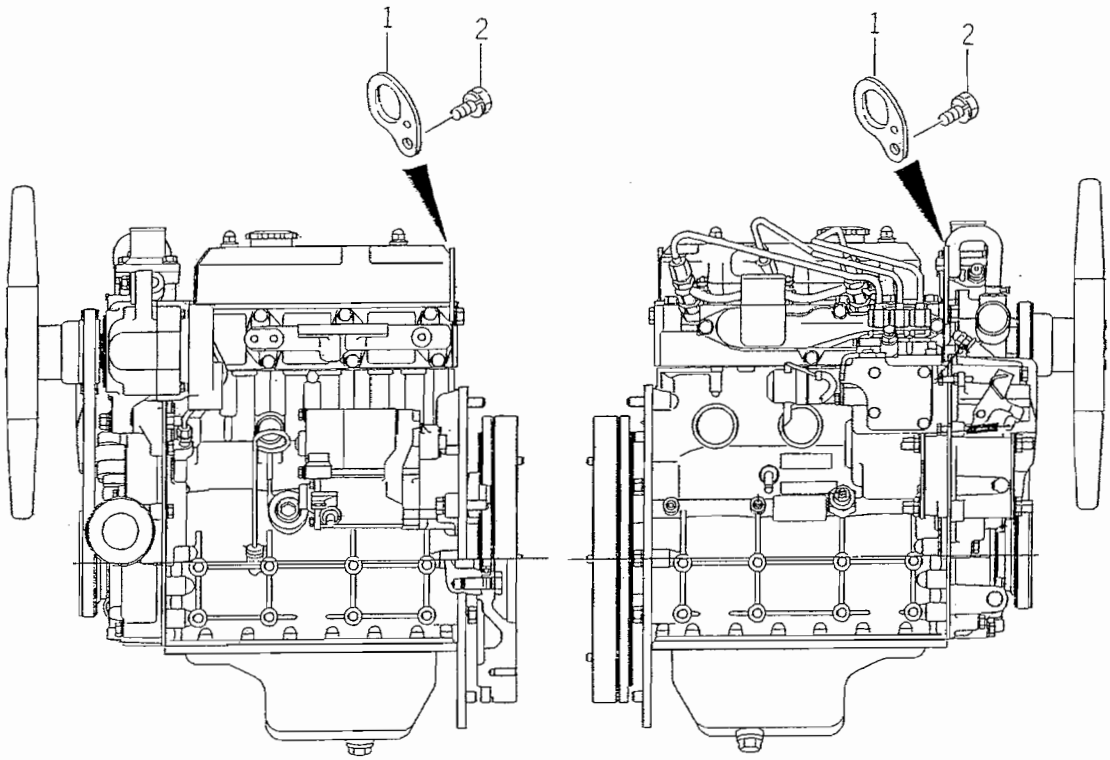

6003-290

KEY	PART CODE	DESCRIPTION	QTY	TYPE OF MODEL		ITC	COL	GRP	REMARKS
				E393G					
1	6211 - 777 - 007 - 20	HANGER	2	*					
2	6901 - 911 - 020 - 00	BOLT,SEMS/M10X20	2	*					

FIG. 11 VALVE

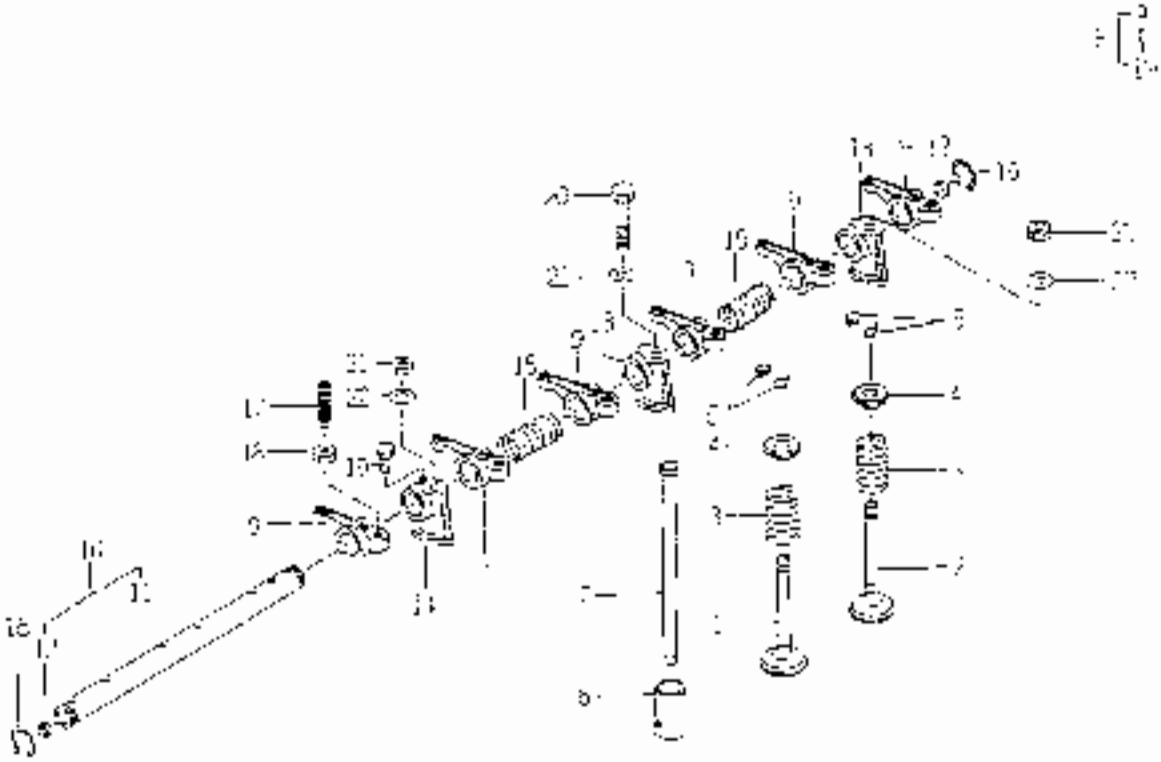

KEY	PART CODE	DESCRIPTION	QTY	TYPE OF MODEL		I C	C O L	G R P	REMARKS
				F3P36					
1	6212 - 551 - 001 - 00	VALVE,INTAKE	3	●					
2	6212 - 552 - 001 - 00	VALVE,EXHAUST	3	●					
3	6212 - 561 - 001 - 00	SPRING,VALVE	6	●					
4	6212 - 566 - 001 - 00	SEAT,VALVE SPRING	6	●					
5	6212 - 565 - 001 - 00	COTTER,VALVE	12	●					
6	6212 - 571 - 001 - 10	TAPPET	6	●					
7	6212 - 575 - 001 - 00	ROD,PUSH	6	●					
8	6212 - 000 - 002 - 00	SHAFT,ROCKER ASSY	1	●					
9	6212 - 611 - 004 - 10	ROCKER,ARM	6	●					
10	6212 - 520 - 001 - 10	SHAFT,ROCKER ASSEMBLY	1	●					
11	6212 - 521 - 002 - 10	SHAFT/ROCKER,ARM	1	●					
12	6212 - 526 - 002 - 10	PLUG	2	●					
13	6212 - 628 - 004 - 00	BRACKET,ROCKER SHAFT	2	●					
14	6212 - 629 - 005 - 00	BRACKET,ROCKER SHAFT	1	●					
15	K108 - 440 - 004 - 00	SPRING	2	●					
16	V704 - 140 - 015 - 00	RING,SNAP 15 C	2	●					
17	6212 - 616 - 002 - 00	SCREW,ADJUST	6	●					
18	6209 - 408 - 003 - 00	NUT	6	●					
19	6209 - 000 - 002 - 00	BOLT	1	●					
20	9901 - 050 - 450 - 00	BOLT/M8X45							
21	6209 - 110 - 500 - 00	NUT/M6	2	●					
22	6209 - 500 - 005 - 00	WASHER,SPRING,6X16	3	●					

FIG. 12 CAM SHAFT

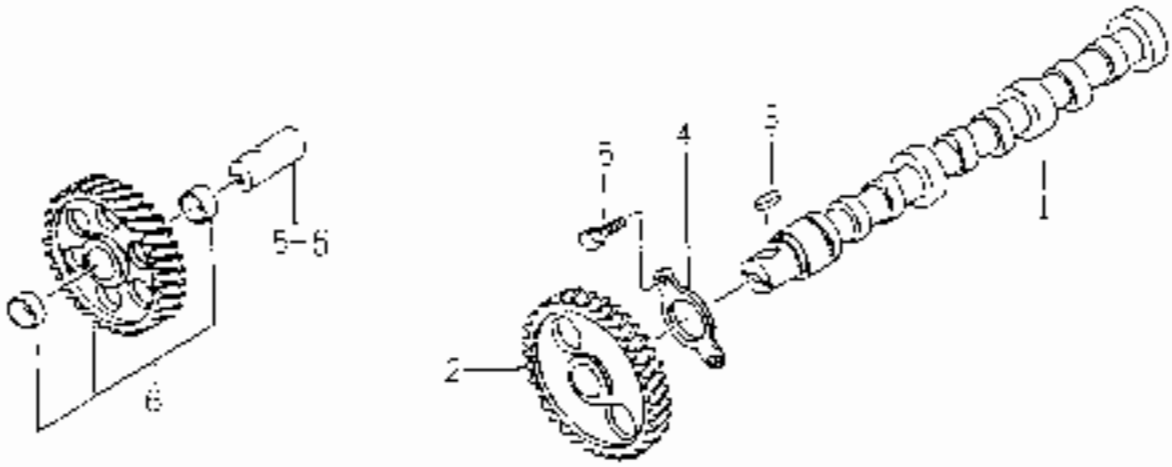

KEY	PART CODE	DESCRIPTION	QTY	TYPE OF MODEL E3000			CO.	GRP	REMARKS
1	6212-511-002-00	SHAFT CAM							
2	6212-522-003-00	GEAR CAMSHAFT							
3	0900-000-716-00	KEY							
4	6217-535-001-00	PLATE THRUST	1						
5	0901-910-012-00	BOLT,SPW5/V6X12	2						
6	6212-003-003-00	GEARIDLE	1						

FIG. 13 PISTON

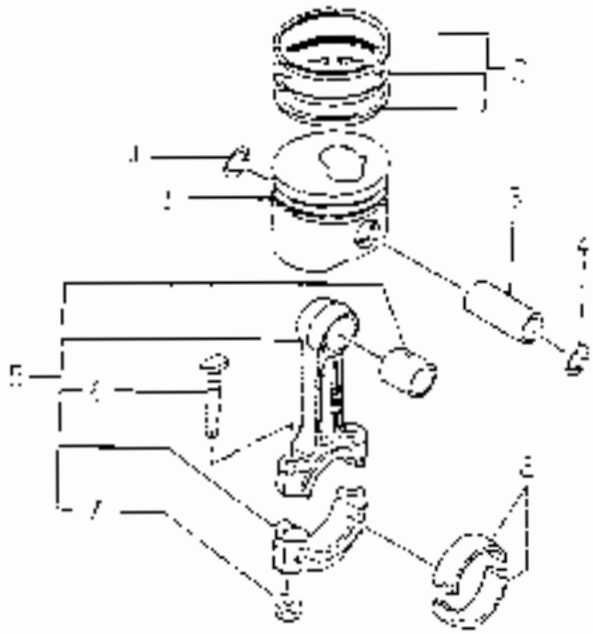

KEY	PART CODE	DESCRIPTION	QTY	TYPE OF MODEL 6300		TOOL	GRP	REMARKS
1	6212 - [illegible] - 015 - 10	PISTON	3					
2	6212 - [illegible] - 001 - 00	RING SET (TOP) SET	3					
3	6212 - 211 - 001 - 10	PIN/PISTON	3					
4	6300 - 087 - 001 - 00	RING/SNAP	3					
5	6212 - 290 - 005 - 00	ROD/CONNECTING	3					
6	6212 - 295 - 001 - 00	BOLT/CONN ROD	6					
7	6200 - 440 - 002 - 00	NUT/FLANGE	6					
8	6212 - 291 - 005 - 00	BEARING/CONN ROD	6					

FIG. 14 PISTON／OVER SIZE (OPTION)

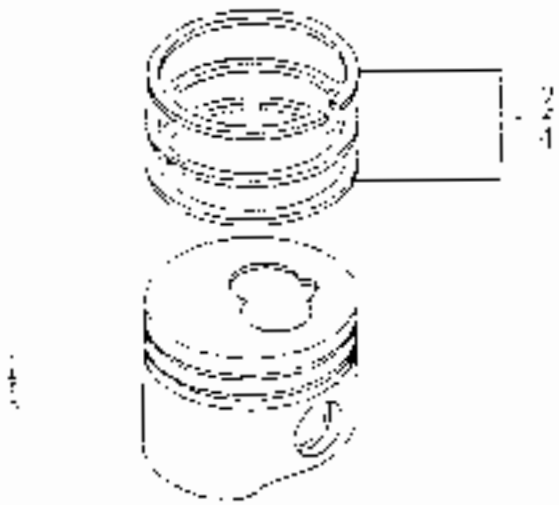

NOTE

KEY	PART CODE	DESCRIPTION	QTY	TYPE OF MODEL		TOOL	SP	REMARKS
				[illegible]				
1	6212-114-013-10	PISTON/OV	3	-				
2	6212-124-003-00	RING (PISTON/OV50) SET	3					
3	6212-116-015-10	PISTON/OV	3	T				
4	6212-120-008-00	RING (PISTON/OV) SET	3	T				

FIG. 15 CRANK SHAFT

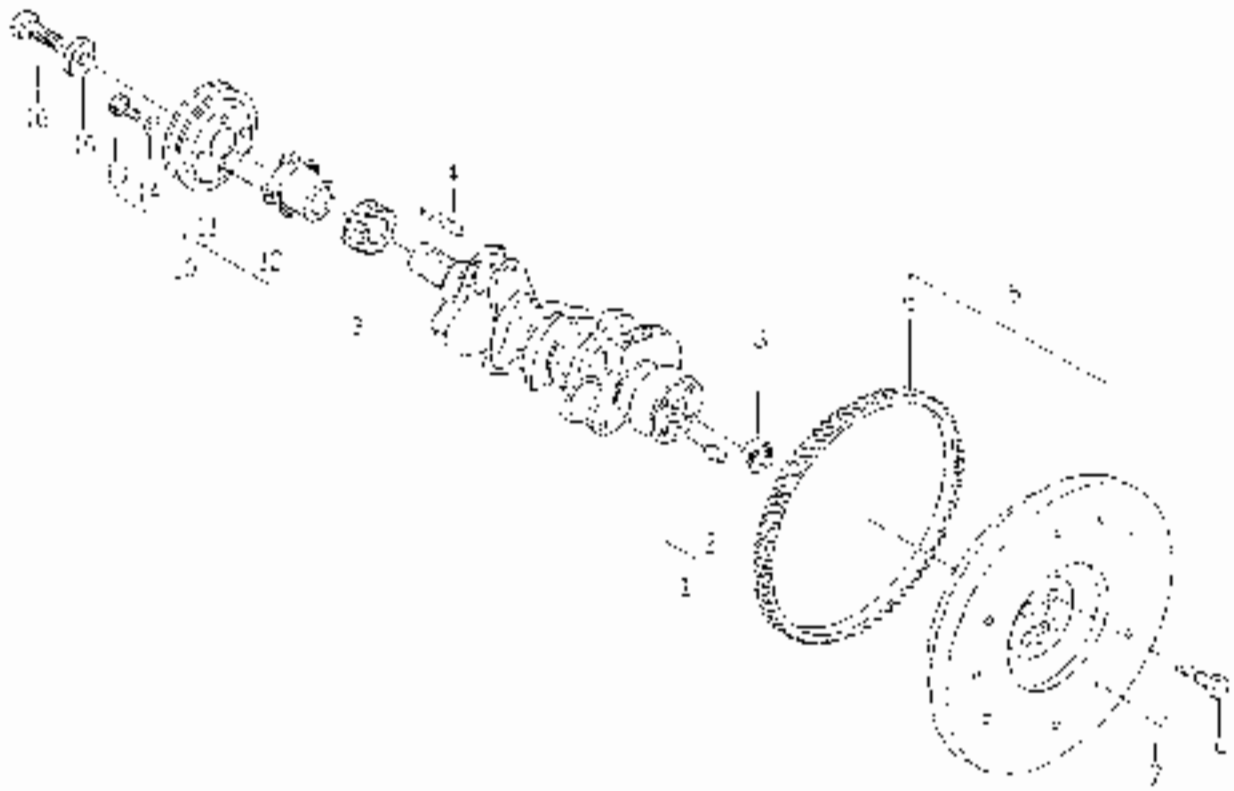

KEY	PART CODE	DESCRIPTION	QTY	TYPE OF MODEL E3800							REMARKS
1	[illegible]	CRANKSHAFT ASSY	1								
2	[illegible]	PIN	[illegible]								
3	5212 621 002 00	GEAR(CRANK SHAFT)	[illegible]								
4	5900-000-[illegible]-00	KEY	1								
5	5212 330 017-20	FLYWHEEL ASSY	1								
6	[illegible]	[illegible]	1								
7	6000 100 010 00	PIN	2								
8	[illegible]	[illegible]	1								
9	1209 000 010 00	BOLT	4								
10	[illegible]	PULLEY ASSY	1								
11	5212 371-000-00	PULLEY	1								
12	5212 372-000-10	CENTER CRANK PULLEY	1								
13	5902 060-010-00	BOLT	4								
14	5905-150 506 00	WASHER SPRING	4								
15	[illegible]	WASHER	[illegible]								
16	[illegible]	BOLT	[illegible]								

FIG. 16 OIL PUMP

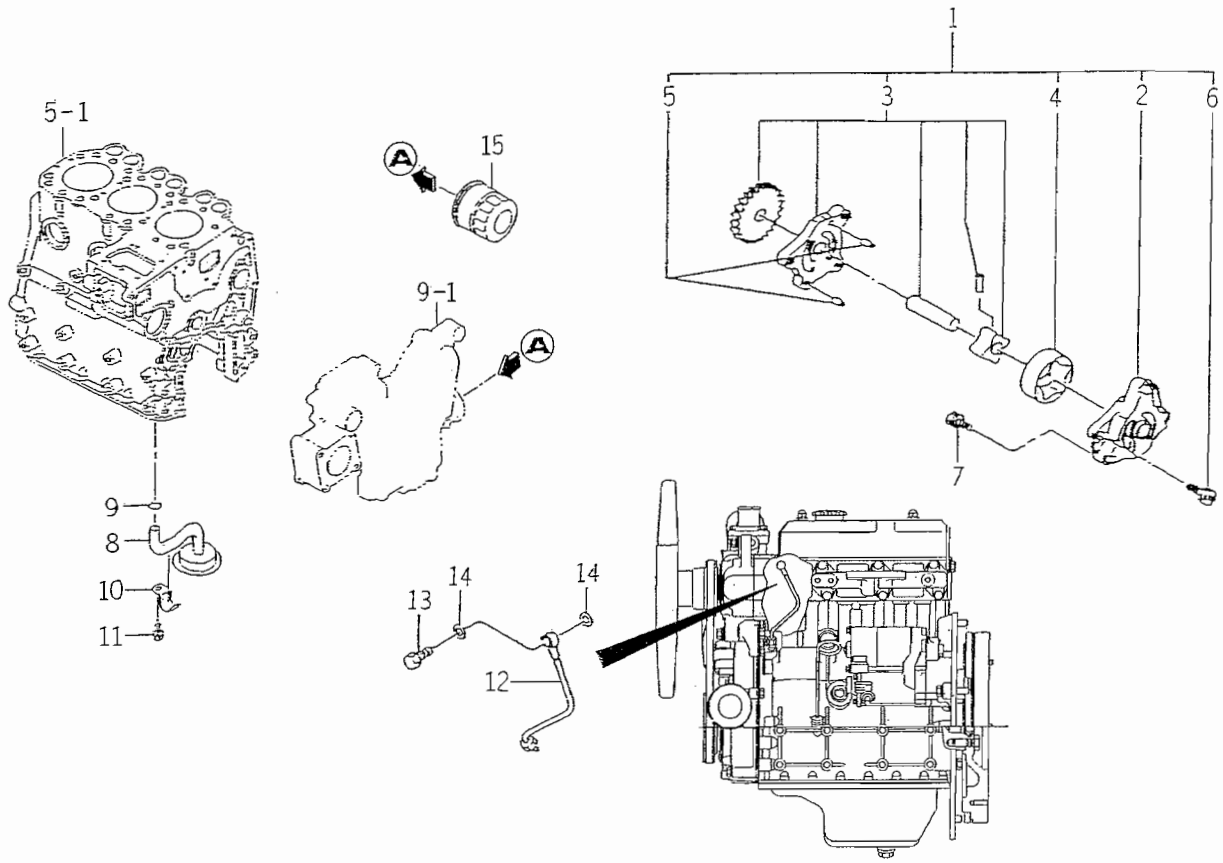

6003-401B

KEY	PART CODE	DESCRIPTION	QTY	TYPE OF MODEL E393G	TYPE OF MODEL	ITC	COL	GRP	REMARKS
1	6213 - 100 - 003 - 20	PUMP,OIL ASSY	1	*					
2	6213 - 111 - 001 - 20	BODY/OILPUMP	1	*					
3	6213 - 120 - 003 - 00	GEAR/OILPUMP ASSY	1	*					
4	6213 - 125 - 001 - 00	ROTOR/OUTER	1	*					
5	6908 - 160 - 408 - 00	PIN/STRAIGHT	2	*					
6	6209 - 009 - 001 - 00	BOLT/WS	3	*					
7	6901 - 910 - 625 - 00	BOLT	3	*					
8	6213 - 140 - 008 - 00	STRAINER	1	*					
9	V720 - 102 - 401 - 50	O - RING/P15	1	*					
10	6213 - 149 - 002 - 00	CLAMP,STRAINER	1	*					
11	6901 - 910 - 816 - 00	BOLT,SEMS/M8X16	1	*					
12	6213 - 311 - 003 - 10	PIPE,OIL	1	*					
13	6909 - 906 - 105 - 10	BOLT,JOINT	1	*					
14	6909 - 920 - 843 - 00	PACKING	2	*					
15	6213 - 240 - 002 - 00	CARTRIDGE,OIL FILTER	1	*					

FIG. 17 WATER PUMP

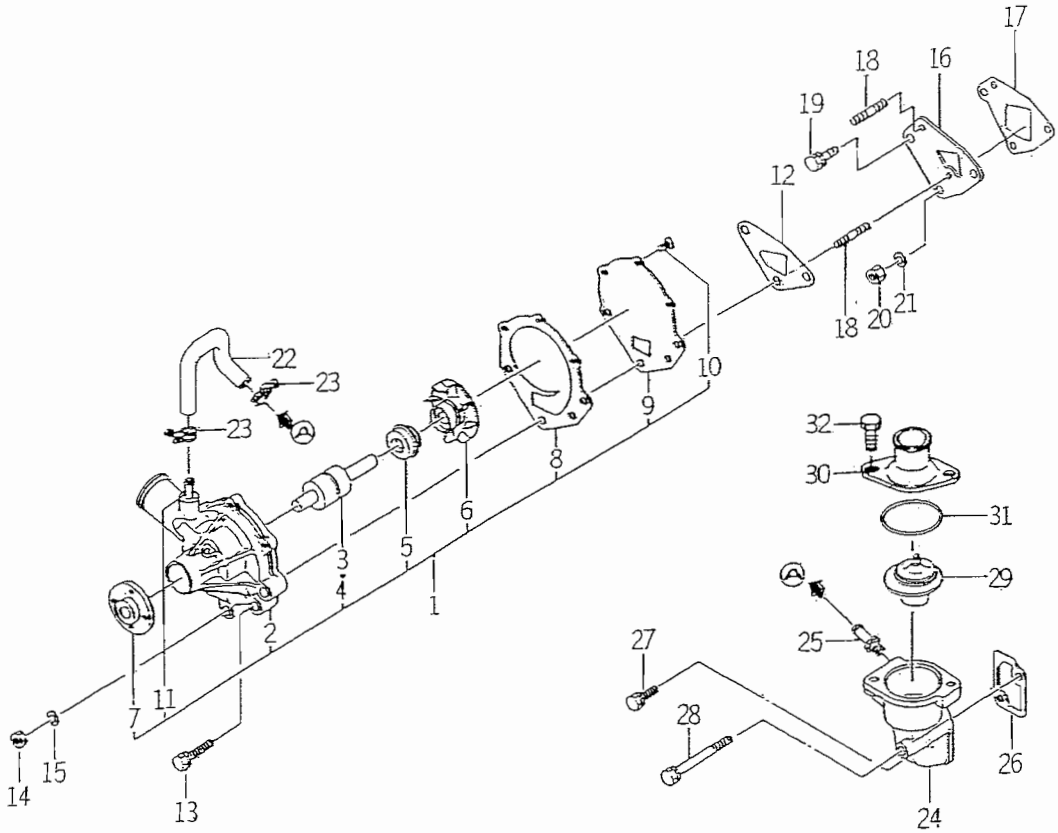

6003-420B

KEY	PART CODE	DESCRIPTION	QTY	TYPE OF MODEL E393G		ITC	COL	GRP	REMARKS
1	6213 - 610 - 005 - 40	WATERPUMP ASSY	1	*					
2	6213 - 611 - 003 - 20	BODY/WATERPUMP	1	*					
3	6213 - 631 - 002 - 00	BEARING/WATER PUMP	1	*					
4	6213 - 631 - 005 - 00	BEARING/WATERPUMP	1	*					
5	6213 - 622 - 002 - 10	SEAL SET/WATER PUMP	1	*					
6	6213 - 621 - 003 - 00	ROTOR/WATERPUMP	1	*					
7	6213 - 642 - 002 - 00	SEAL/WATER PUMPPULLE	1	*					
8	6213 - 613 - 002 - 10	GASKET	1	*					
9	6213 - 612 - 004 - 00	PLATE/WATER PUMP	1	*					
10	6213 - 619 - 003 - 00	SCREW/WATER PUMP	3	*					
11	6213 - 619 - 002 - 00	PIPE/WATER PUMP	2	*					
12	6213 - 614 - 003 - 10	GASKET/WATER PUMP	1	*					
13	6901 - 910 - 845 - 00	BOLT,SEMS/M8X45	1	*					
14	6909 - 110 - 508 - 00	NUT/M8	2	*					
15	6909 - 150 - 508 - 00	WASHER	2	*					
16	6213 - 619 - 005 - 00	SPACER,WATER PUMP	1	*					
17	6213 - 614 - 006 - 10	GASKET/SPACER	1	*					
18	6209 - 300 - 002 - 00	STUD	2	*					
19	V211 - 560 - 802 - 00	BOLT/M8X20	1	*					
20	6909 - 110 - 508 - 00	NUT/M8	1	*					
21	6909 - 150 - 508 - 00	WASHER	1	*					
22	6213 - 729 - 013 - 10	HOSE/RUBBER	1	*					
23	J061 - 210 - 015 - 00	CLAMP/WIRE/10 - 15	2	*					
24	6213 - 716 - 001 - 40	HOUSING/THERMOSTAT	1	*					
25	6213 - 721 - 003 - 00	PIPE,PUMP HOUSING	1	*					

FIG. 17 WATER PUMP

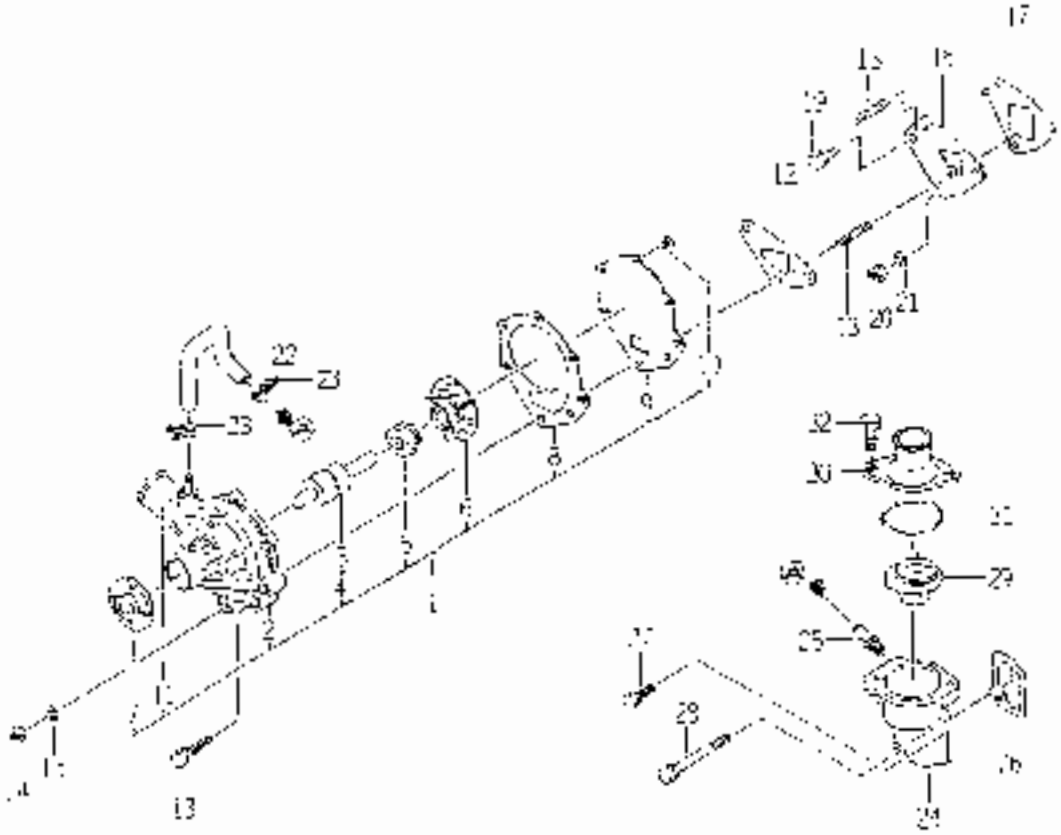

KEY	PART CODE	DESCRIPTION	QTY	TYPE OF MODEL		ITEM CODE	REMARKS
				E3000			
20	6213 - 743 - 002 - 10	GASKET/HOUSING	1	•			
21	V211 560 - 302 00	BOLT/[illegible]	1	•			
22	9209 - 030 006 00	BOLT/[illegible]		•			
23	5513 773 022 10	THERMOSTAT		•			
30	[illegible] - 711 - 003 - 20	PIPE/WATER OUTLET		•			
31	V723 102 000 50	O RING		•			
32	6901 910 830 - 00	BOLT	3	•			

FIG. 18 COOLING FAN

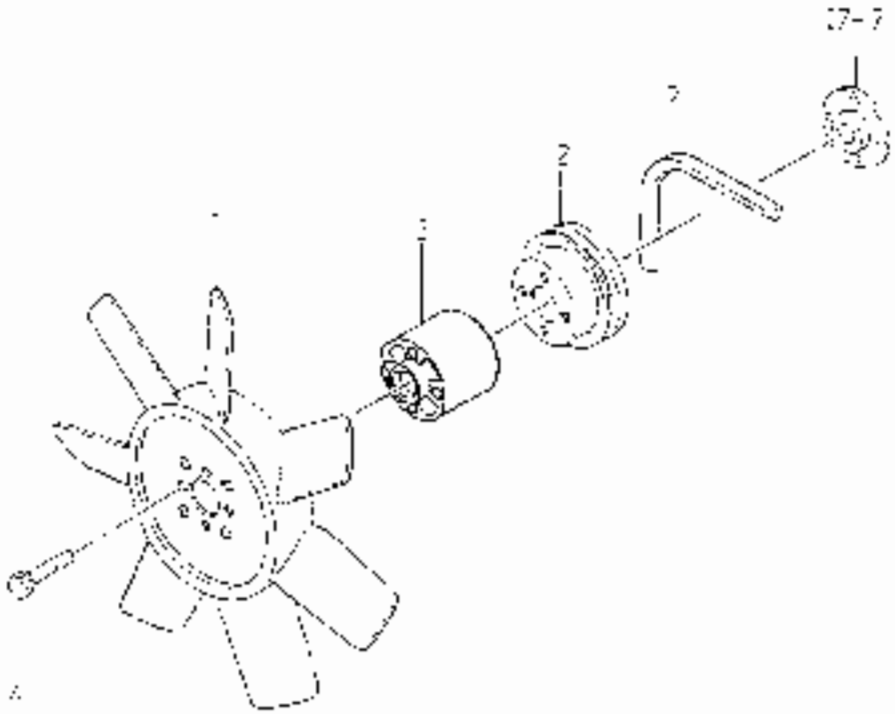

KEY	PART CODE	DESCRIPTION	QTY	TYPE OF MODEL E3933				REMARKS
1	6213-660-007-00	FAN/COOLING	1					
2	6210-641-004-00	PULLEY/WATER PUMP	1					
3	6213-006-000-00	SPACER/FAN/28	1					
4	6200-000-044-00	BOLT/M8	4					
5	6213-671-010-00	BELT/V-RIBBED/FAN	1					

FIG. 19 INJECTION NOZZLE

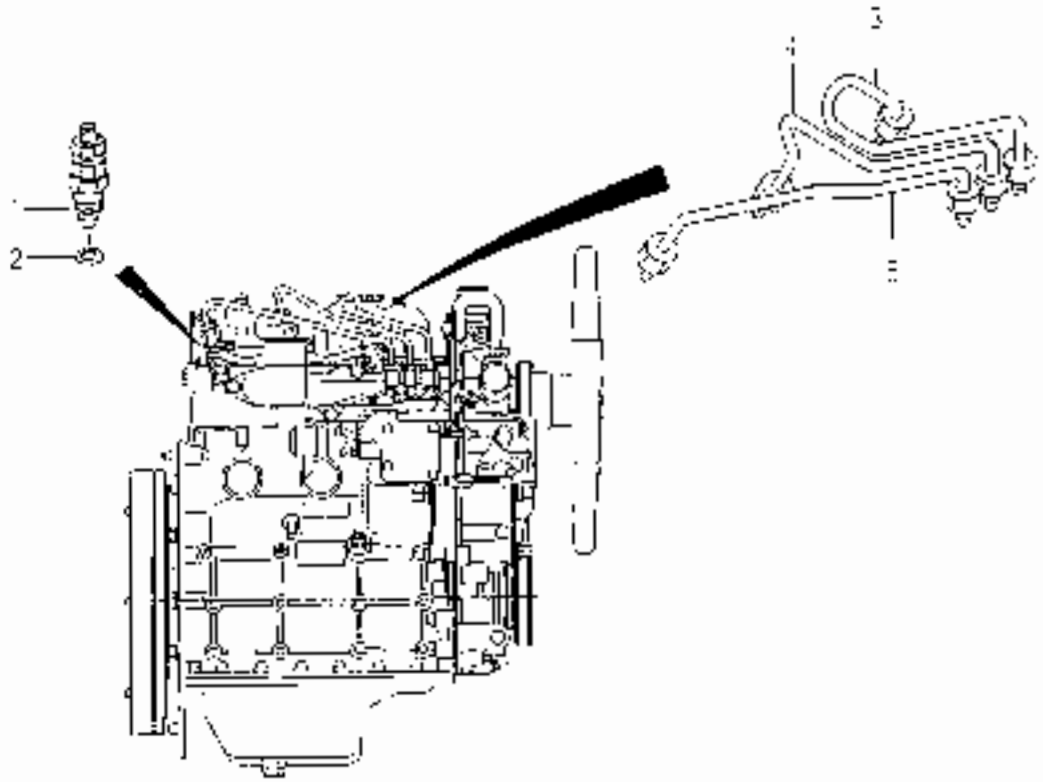

KEY	PART CODE	DESCRIPTION	QTY	TYPE OF MODEL F3836		TC	COLOR	REMARKS
1	6215-900-060-00	INJECTION NOZZLE ASSY	3	•				FIG 024
2	6215-015-002-00	GASKET/NOZZLE	3	•				
3	6215-411-079-00	PIPE/INJECTION ASSY		•				
4	6215-411-070-00	PIPE/INJECTION ASSY		•				
5	6215-411-077-00	PIPE/INJECTION ASSY						

FIG. 20 INJECTION PUMP

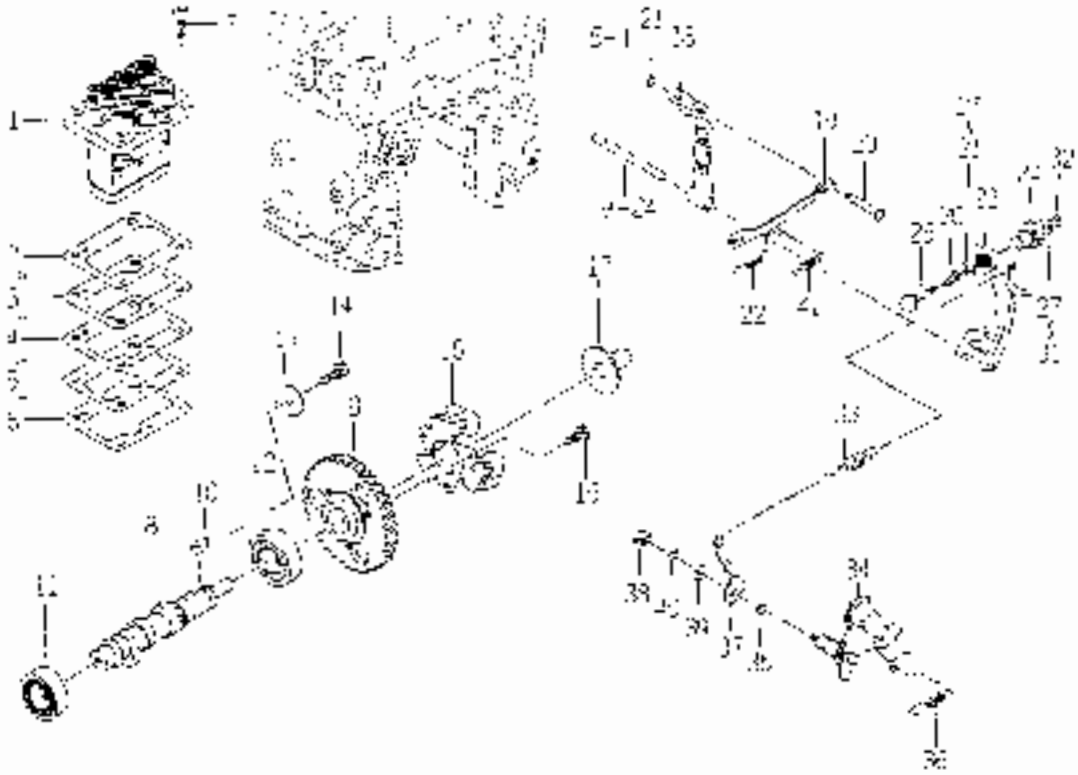

KEY	PART CODE	DESCRIPTION	QTY	TYPE OF MODEL				REMARKS
				3930				
1	6215 - 600 - 109 - 10	INJECTION PUMP ASSY	1					
2	6215 - 752 - 001 - 00	SH.MU.INJECTION PUMP	1					
3	6215 - 752 - 002 - 00	SH.MU.INJECTION PUMP	1					
4	6215 - 752 - 003 - 00	SH.MU.INJECTION PUMP	1					
5	6215 - 752 - 004 - 00	SH.MU.INJECTION PUMP	1					
6	6215 - 752 - 005 - 00	SH.MU.INJECTION PUMP	1					
7	6209 - 055 - 001 - 00	BOLT/M8X18	4					
8	6215 - 521 - 001 - 00	CAMSHAFT/INJ.PUMP	1					
9	6212 - 524 - 002 - 00	GEARING PUMP						
10	6506 - 000 - 115 - 00	KEY						
11	V300 - 110 - 370 - 30	BEARING,RS/6203						
12	V600 - 110 - 600 - 40	BEARING,RS/6004	1					
13	6212 - 535 - 002 - 00	PLATE, THRUST INJ.PUMP	1					
14	5901 - 510 - 612 - 00	BOLT SEVS M6X12	1					
15	6215 - 620 - 00 - 00	L.WEIGHT	1					
16	6209 - 000 - 040 - 00	BOLT/M8X10	2					
17	6215 - 525 - 001 - 10	RED.THRUST	1					
18	6215 - 541 - 001 - 00	ATV.LOATING	1					
19	6215 - 547 - 001 - 10	INK CONTROL						
20	6215 - 542 - 000 - 00	PILCONTROL						
21	V710 - 110 - 004 - 00	RING SNAP/4.F						
22	6215 - 640 - 009 - 00	SPRING SETTING						
23	6215 - 547 - 015 - 30	A.64/TENSION						
24	6215 - 641 - 015 - 00	CASE/ADAPTER						
25	6215 - 640 - 017 - 10	PIN ADAPTER						

FIG. 20 INJECTION PUMP

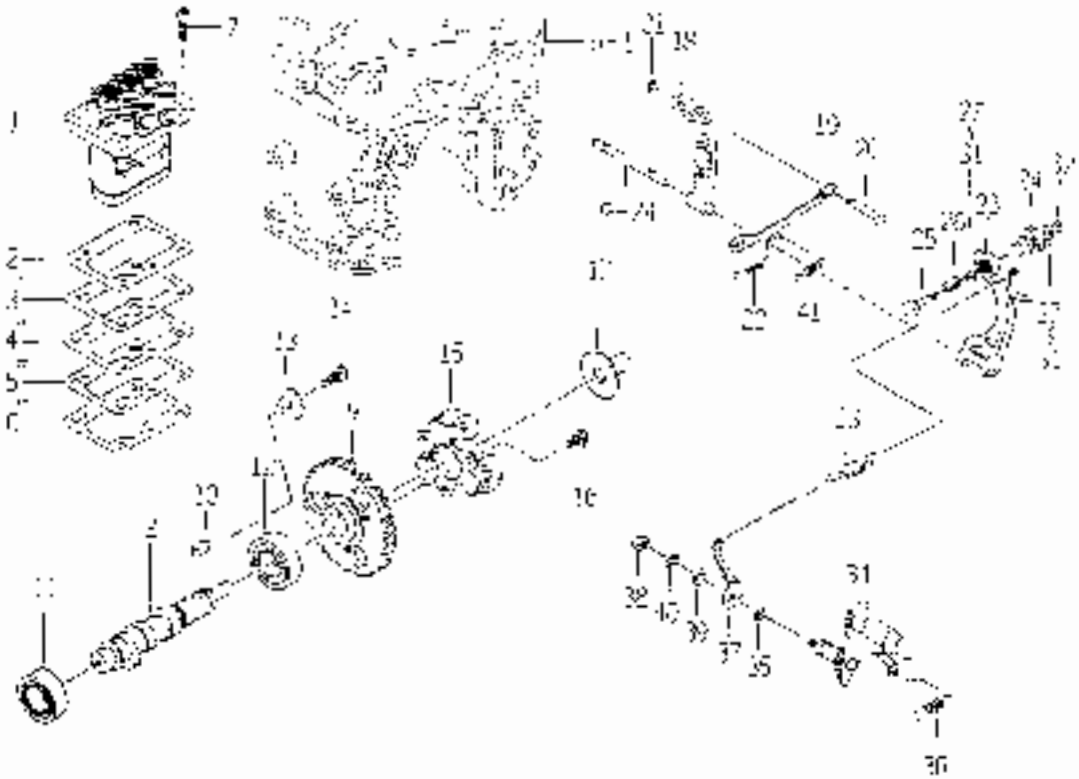

KEY	PART CODE	DESCRIPTION	QTY	TYPE OF MODEL E3300			COL	SUP	REMARKS
25	6215 - 549 - 005 - 10	SPRING ADAPTER	1						
27	6215 - 549 - 006 - 00	SHIM/ADAPTER	2						
28	6215 - 549 - 009 - 00	SHIM/ADAPTER	2						
29	6215 - 549 - 010 - 00	SHIM/ADAPTER	2						
30	6215 - 549 - 021 - 00	SHIM/ADAPTER							
31	6215 - 549 - 024 - 00	SHIM/ADAPTER	1						
32	9710 - 140 - 004 - 00	PINCH/NAP/4 F	1						
33	6215 - 58 - 051 - 00	SPRING/GOVERNER	1						
34	6215 - 541 - 074 - 10	LEVER CONTROL COMP	1						
35	9720 - 101 - 600 - 80	O RING/P	1						
36	6209 - 550 - 002 - 0	SPANCHETION	1						
37	6215 - 549 - 007 - 10	ARM/CONTROL	1						
38	0909 - 110 - 406 - 00	NUT							
39	9[illegible] - 280 - 006 - 00	WASHER/MB							
40	9[illegible] - 150 - 000 - 00	WASHER/P/MB							
41	6215 - 549 - 008 - 00	SPRING STARTING							

FIG. 21 FUEL PIPE

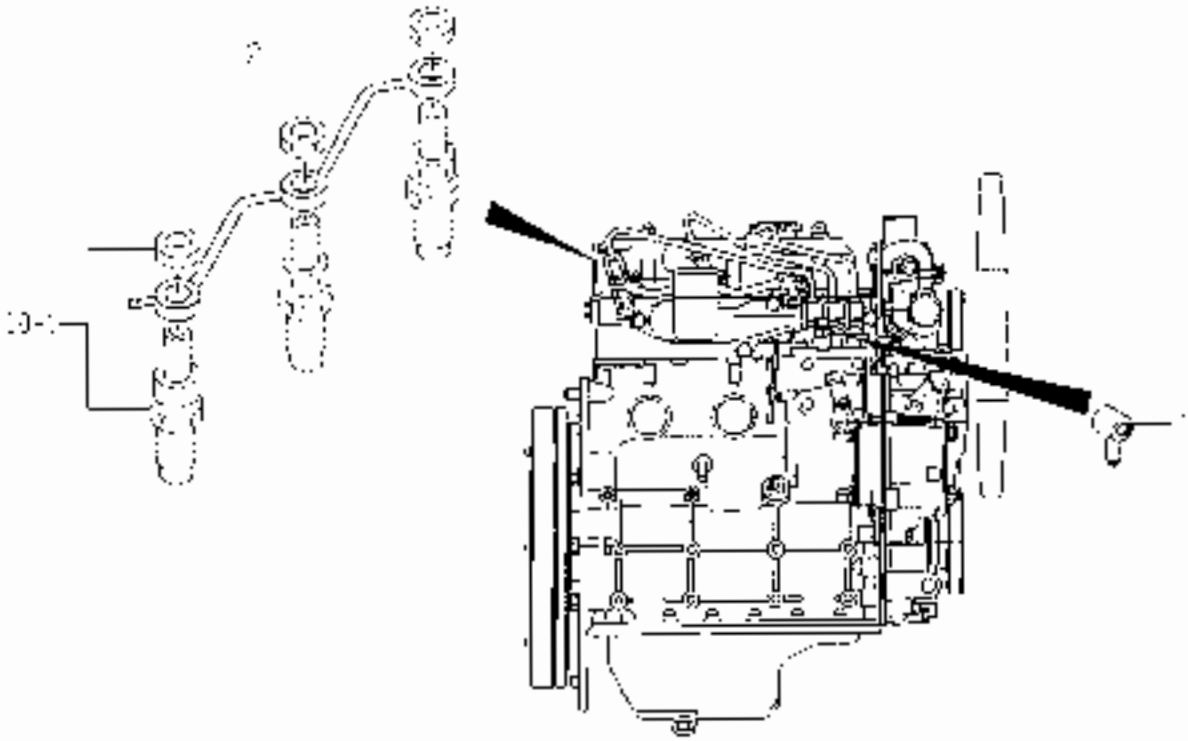

KEY	PART CODE	DESCRIPTION	QTY	TYPE OF MOUNT				REMARKS
				DISCH				
1	[illegible]	CONNECTOR/FUEL						
2	[illegible]	PIPE/FUEL						

FIG. 22 ELECTRIC (1)

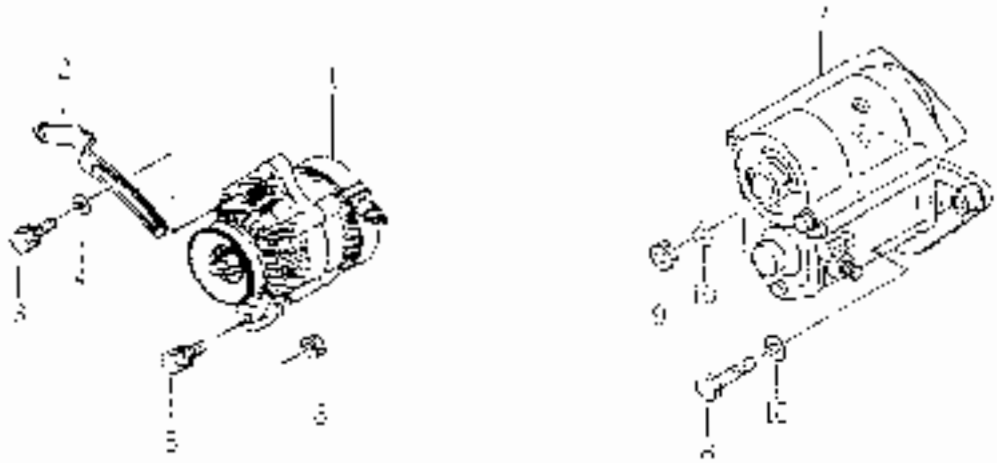

KEY	PART CODE	DESCRIPTION	QTY	TYPE OF MODEL				GRP	REMARKS
				D900					
1	[illegible]	GENERATOR ASSY	1						F.O. 027
2	5213 - 074 - 000 - 10	PLATE, ADJUST	[illegible]						
3	V211 - 000 - 802 - 00	BOLT, M8X20	[illegible]						
4	1272 - 121 - 001 - 00	WASHER, 16X22X2	[illegible]						
5	6209 - 031 - 063 - 00	BOLT, WFP	1						
6	6808 - 110 - 410 - 00	NUT, V10	1						
7	0281 - 100 - 005 - 00	STARTER ASSY	1						F.O. 026
8	V703 - 361 - 004 - 00	BOLT	1						
9	0000 - 110 - 410 - 00	NUT, V10	1						
10	5909 - 150 - 510 - 00	WASHER, 5P/M10	2						

FIG. 23 ELECTRIC (2)

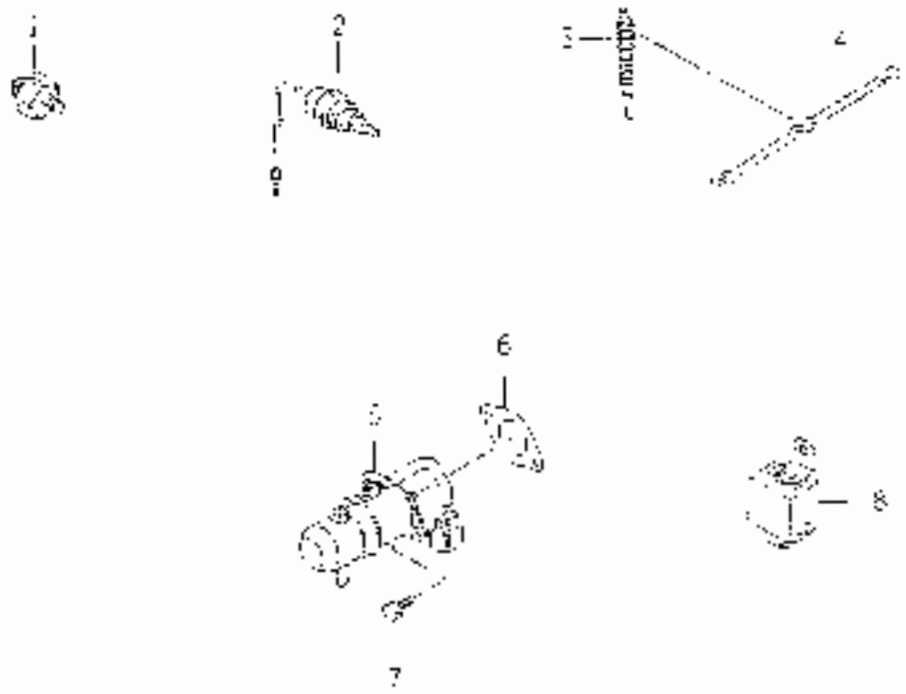

KEY	PART CODE	DESCRIPTION	QTY	TYPE OF MODEL D333			REMARKS
1	6281 - 971 - 000 - 00	SWITCH/OILPRESSURE	1				
2	6282 - 400 - 002 - 00	SWITCH/OVERHEAT	1				
3	6281 - 410 - 014 - 00	GLOWPLUG	3				
4	0219 - 792 - 002 - 00	CONNECTOR&GLOW PLUG	1				
5	6281 - 910 - 001 - 00	SOLENOID	1				
6	0209 - 050 - 002 - 00	GASKET	1				
7	5901 - 010 - 012 - 00	BOLT&NUT/FUSE	2				
8	6[illegible] - 9[illegible] - 001 - 00	RELAY/SOLENOID	1				

FIG. 24 COMPONENT PARTS FOR 6215 – 300 – 037 – 00 ON Fig.19

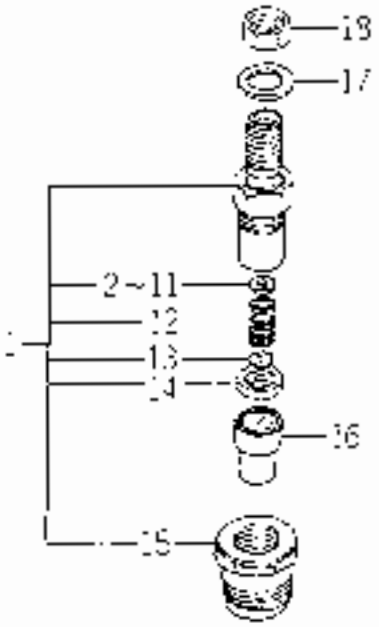

KEY	PART CODE	DESCRIPTION	QTY	TYPE OF MODEL D'996	TYG	SOL	GHP	REMARKS
	6215 – 330 – 021 – 00	HOLDER/NOZZLE ASSY	3	•				
1	6215 – 342 – 007 – 00	SEAT/SPRING	3	•				
2	6215 – 343 – 003 – 00	SPRING/NOZZLE	3	•				
3	6215 – 345 – 044 – 00	SHIM/T=0.1	3	•				
4	6215 – 345 – 045 – 00	SHIM/T=0.2	3	•				
5	6215 – 345 – 046 – 00	SHIM/T=0.3	3	•				
6	6215 – 345 – 047 – 00	SHIM/T=0.4	3	•				
7	6215 – 345 – 048 – 00	SHIM/T=0.5	3	•				
8	6215 – 345 – 049 – 00	SHIM/T=0.6	3	•				
9	6215 – 345 – 050 – 00	SHIM/T=0.8	3	•				
10	6215 – 345 – 051 – 00	SHIM/T=0.9	3	•				
11	6215 – 345 – 052 – 00	SHIM/T=0.60	3	•				
12	6215 – 345 – 053 – 00	SHIM/T=0.8	3	•				
13	6215 – 326 – 002 – 00	SPACER	3	•				
14	6215 – 302 – 002 – 00	NUT,RETAINING	3	•				
15	6215 – 358 – 006 – 00	GASKET	3	•				
16	6215 – 354 – 004 – 00	NUT	3	•				
18	6215 – 311 – 005 – 00	NOZZLE	3	•				

FIG. 25 COMPONENT PARTS FOR 6215 – 600 – 109 – 10 ON Fig.20

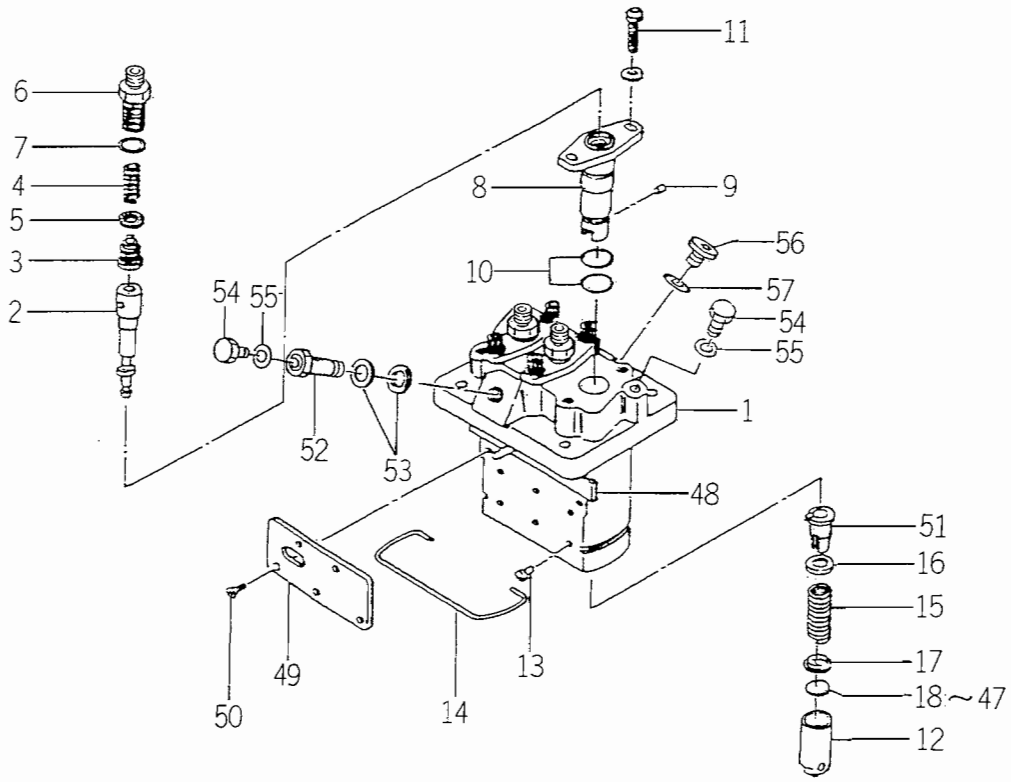

6215-6001

KEY	PART CODE	DESCRIPTION	QTY	TYPE OF MODEL E393G		ITC	COL	GRP	REMARKS
1	6215 – 611 – 002 – 00	HOUSING,PUMP	1	*					
2	6215 – 631 – 017 – 00	PLUNGER ASSY	3	*					
3	6215 – 641 – 007 – 00	DELIVERYVALVE	3	*					
4	6215 – 643 – 002 – 00	SPRING DELIVERY VALV	3	*					
5	6215 – 649 – 003 – 00	GASKET	3	*					
6	6215 – 644 – 002 – 00	HOLDER DELIVERY VALV	3	*					
7	6215 – 649 – 004 – 00	O – RING	3	*					
8	6215 – 635 – 002 – 00	SLEEVE,FRANGE	3	*					
9	6215 – 649 – 005 – 00	PIN	3	*					
10	6215 – 649 – 006 – 00	O – RING	6	*					
11	6215 – 649 – 007 – 00	SCREW	6	*					
12	6215 – 622 – 002 – 00	TAPPET	3	*					
13	6215 – 629 – 017 – 00	PIN	3	*					
14	6215 – 629 – 018 – 00	RING,SNAP	1	*					
15	6215 – 634 – 002 – 00	SPRING,PLUNGER	3	*					
16	6215 – 639 – 006 – 00	SEAT,SPRING	3	*					
17	6215 – 639 – 007 – 00	SEAT,SPRING	3	*					
18	6215 – 629 – 020 – 00	PLATE/T = 1.80	3	*					
19	6215 – 629 – 021 – 00	PLATE/T = 1.85	3	*					
20	6215 – 629 – 022 – 00	PLATE/T = 1.90	3	*					
21	6215 – 629 – 023 – 00	PLATE/T = 1.95	3	*					
22	6215 – 629 – 024 – 00	PLATE/T = 2.00	3	*					
23	6215 – 629 – 025 – 00	PLATE/T = 2.05	3	*					
24	6215 – 629 – 026 – 00	PLATE/T = 2.10	3	*					
25	6215 – 629 – 027 – 00	PLATE/T = 2.15	3	*					

FIG. 25 COMPONENT PARTS FOR 6215 – 600 – 109 – 10 ON Fig.20

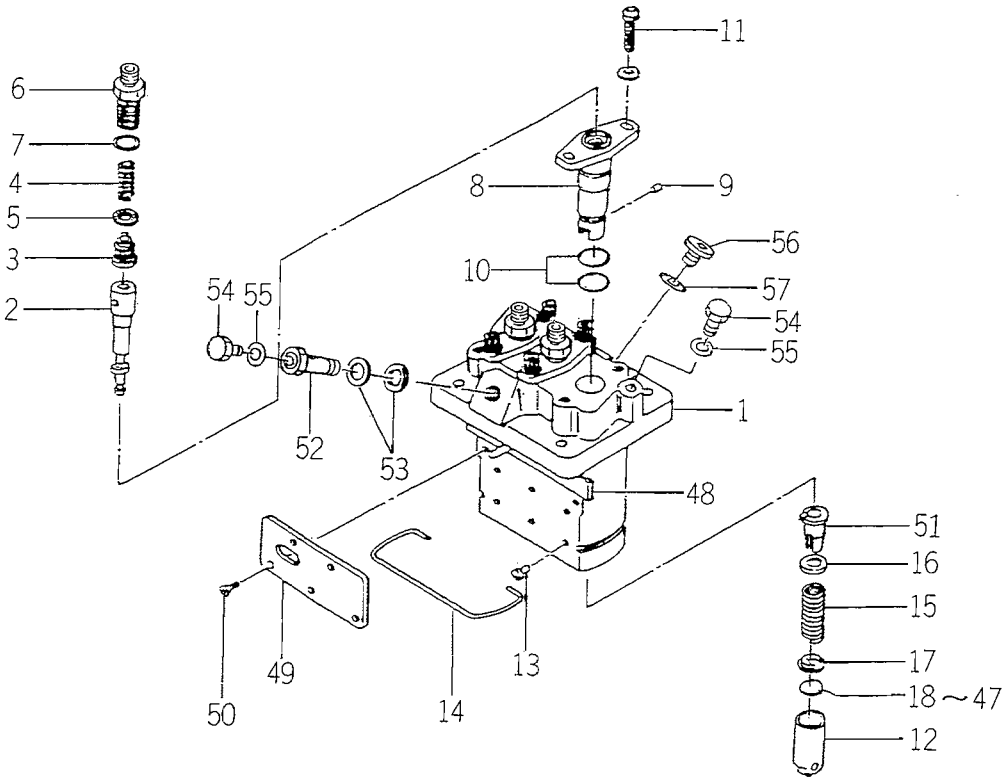

6215-6001

KEY	PART CODE	DESCRIPTION	QTY	TYPE OF MODEL E393G		ITC	COL	GRP	REMARKS
26	6215 – 629 – 028 – 00	PLATE/T = 2.20	3	*					
27	6215 – 629 – 029 – 00	PLATE/T = 2.25	3	*					
28	6215 – 629 – 030 – 00	PLATE/T = 2.30	3	*					
29	6215 – 629 – 031 – 00	PLATE/T = 2.35	3	*					
30	6215 – 629 – 032 – 00	PLATE/T = 2.40	3	*					
31	6215 – 629 – 033 – 00	PLATE/T = 2.45	3	*					
32	6215 – 629 – 034 – 00	PLATE/T = 2.50	3	*					
33	6215 – 629 – 068 – 00	PLATE	3	*					
34	6215 – 629 – 069 – 00	PLATE	3	*					
35	6215 – 629 – 070 – 00	PLATE	3	*					
36	6215 – 629 – 071 – 00	PLATE	3	*					
37	6215 – 629 – 072 – 00	PLATE	3	*					
38	6215 – 629 – 073 – 00	PLATE	3	*					
39	6215 – 629 – 074 – 00	PLATE	3	*					
40	6215 – 629 – 075 – 00	PLATE	3	*					
41	6215 – 629 – 076 – 00	PLATE	3	*					
42	6215 – 629 – 077 – 00	PLATE	3	*					
43	6215 – 629 – 078 – 00	PLATE	3	*					
44	6215 – 629 – 079 – 00	PLATE	3	*					
45	6215 – 629 – 080 – 00	PLATE	3	*					
46	6215 – 629 – 081 – 00	PLATE	3	*					
47	6215 – 629 – 082 – 00	PLATE	3	*					
48	6215 – 637 – 002 – 00	ROD,CONTROL	1	*					
49	6215 – 612 – 002 – 00	PLATE	1	*					
50	6215 – 619 – 012 – 00	SCREW	4	*					

FIG. 25 COMPONENT PARTS FOR 6215 – 600 – 109 – 10 ON Fig.20

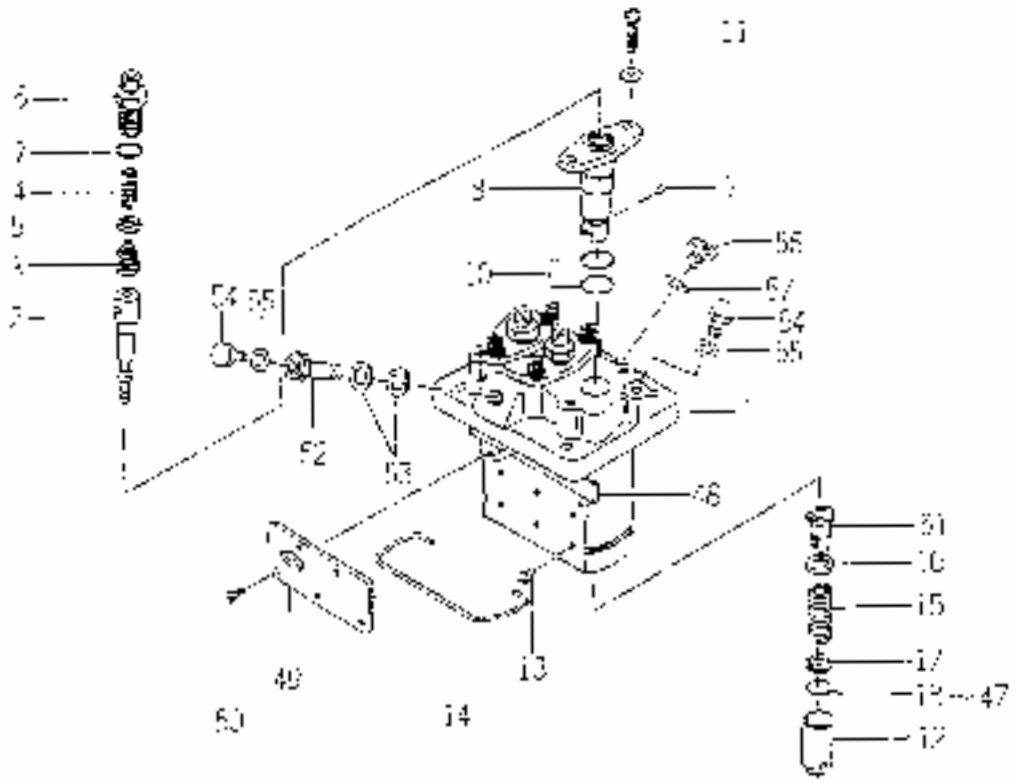

KEY	PART CODE	DESCRIPTION	QTY	TYPE OF MODEL								REMARKS
51	6215 – 055 – 009 – 00	CONTROL SLEEVE	3									
52	6215 – 615 – 030 – 00	EYEBOLT	1									
53	6215 – 615 – 014 – 00	GASKET	2									
54	6215 – 615 – 015 – 00	BOLT	2									
55	6215 – 615 – 016 – 00	GASKET	2									
56	6215 – 010 – 020 – 00	PLUG	1									
57	6215 – 615 – 014 – 00	GASKET										

FIG. 26 COMPONENT PARTS FOR 6281 – 100 – 005 – 00 ON Fig.22

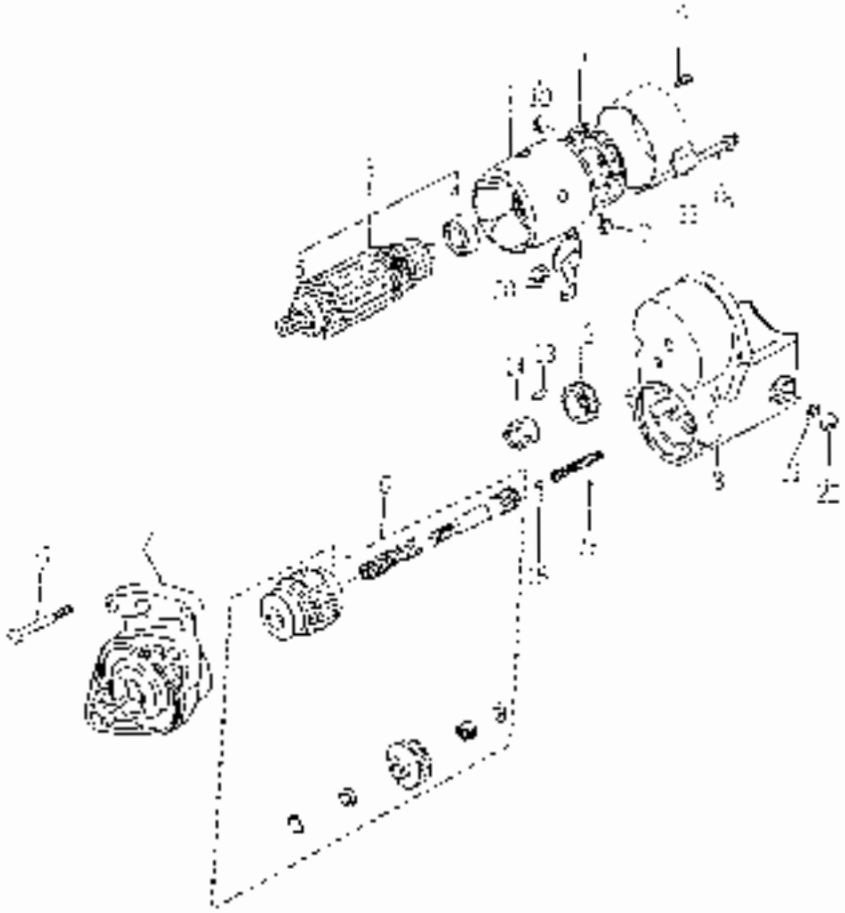

KEY	PART CODE	DESCRIPTION	QTY	TYPE OF MODEL				REMARKS
				C900				
1	6281 – 111 – 007 – 00	YOKE/STARTER	1	•				
2	6281 – 110 – 002 – 00	STATOR SET	2	•				
3	6281 – 121 – 003 – 00	ARMATURE	1	•				
4	6281 – 129 – 010 – 00	BEARING,BALL		•				
5	6281 – 129 – 011 – 00	BEARING,BALL		•				
6	6281 – 174 – 001 – 00	STARTER KIT	1	•				
7	6281 – 129 – 020 – 00	HOUSING,STARTER ASSY	1	•				
8	6281 – 151 – 006 – 00	SWITCH,STARTER ASSY	1	•				
9	6281 – 118 – 002 – 00	HOLDER,BRUSH ASSY	1	•				
10	6281 – 117 – 007 – 00	SPRING,BRUSH	4	•				
11	6281 – 118 – 005 – 00	FRAME,STARTER END	1	•				
12	6281 – 123 – 011 – 00	PINION,STARTER		•				
13	6281 – 179 – 009 – 00	BORA	3	•				
14	6281 – 120 – 100 – 00	RETAINER	1	•				
15	6281 – 129 – 092 – 00	BALL		•				
16	6281 – 128 – 006 – 00	SPRING		•				
17	6281 – 129 – 006 – 00	SCREW	2	•				
18	6281 – 141 – 008 – 00	BOLT/M5	2	•				
19	6281 – 129 – 009 – 00	SCREW/M5	2	•				
20	6809 – 111 – 508 – 00	NUT		•				
21	6809 – 150 – 508 – 00	WASHER		•				
22	6809 – 110 – 408 – 00	NUT/M6		•				

FIG. 27 COMPONENT PARTS FOR 6281 – 200 – 005 – 00 ON Fig.22

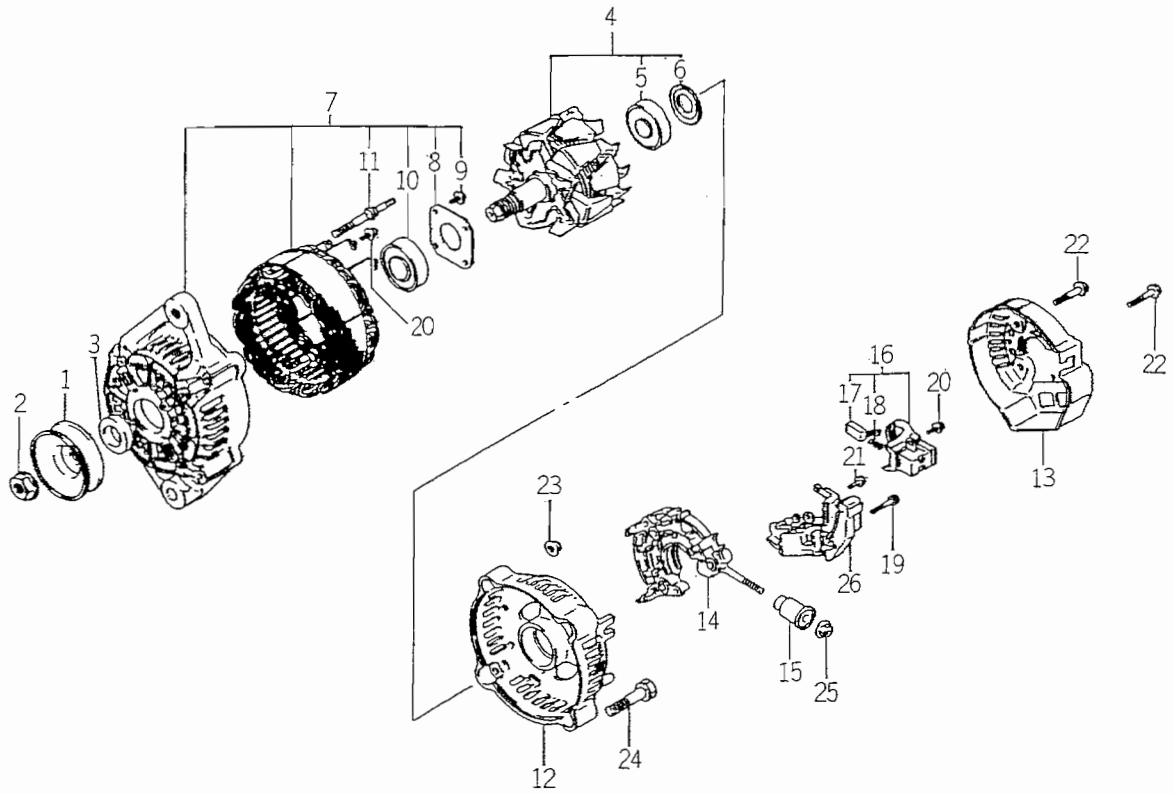

6281-2000

KEY	PART CODE	DESCRIPTION	QTY	TYPE OF MODEL E393G		ITC	COL	GRP	REMARKS
1	6281 – 222 – 004 – 00	PULLEY	1	*					
2	6281 – 229 – 002 – 00	NUT	1	*					
3	6281 – 229 – 003 – 00	COLLOR	1	*					
4	6281 – 221 – 001 – 00	ROTOR ASSY	1	*					
5	6281 – 229 – 005 – 00	BEARING	1	*					
6	6281 – 229 – 004 – 00	COVER,BEARING	1	*					
7	6281 – 213 – 006 – 00	FRAME ASSY	1	*					
8	6281 – 229 – 006 – 00	PLATE	1	*					
9	6281 – 229 – 007 – 00	BOLT	4	*					
10	6281 – 229 – 009 – 00	BEARING	1	*					
11	6281 – 229 – 008 – 00	BOLT	2	*					
12	6281 – 214 – 003 – 00	FRAME	1	*					
13	6281 – 214 – 004 – 00	COVER	1	*					
14	6281 – 229 – 029 – 00	HOLDER ASSY	1	*					
15	6281 – 229 – 011 – 00	BUSH	1	*					
16	6281 – 217 – 001 – 00	HOLDER,BRUSH ASSY	1	*				–	
17	6281 – 215 – 001 – 00	BRUSH	2	*					
18	6281 – 216 – 001 – 00	SPRING	2	*					
19	6281 – 229 – 012 – 00	BOLT	2	*					
20	6281 – 229 – 013 – 00	BOLT	6	*					
21	6281 – 229 – 014 – 00	BOLT	1	*					
22	6281 – 229 – 015 – 00	BOLT	3	*					
23	6281 – 229 – 016 – 00	NUT	2	*					
24	6281 – 229 – 017 – 00	BOLT	2	*					
25	6281 – 229 – 018 – 00	NUT	1	*					

FIG. 27 COMPONENT PARTS FOR 6281 – 200 – 005 – 00 ON Fig.22

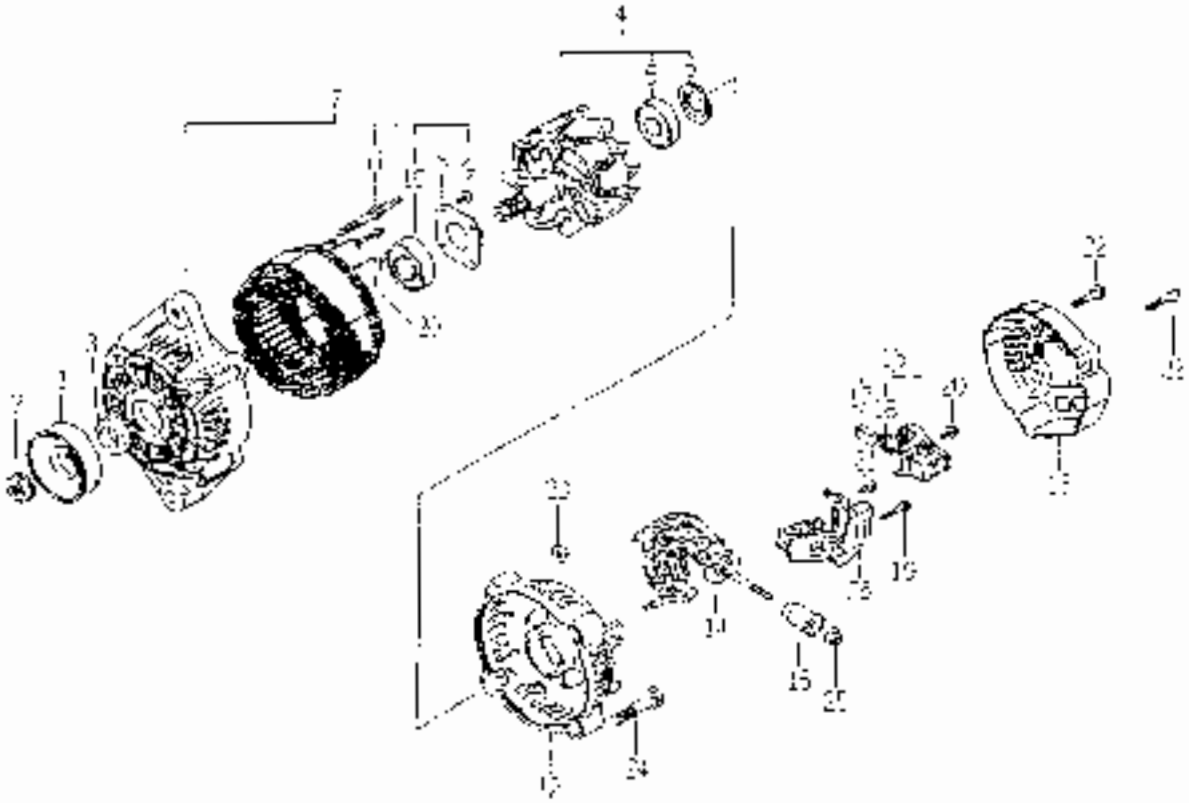

KEY	PART CODE	DESCRIPTION	QTY	TYPE OF MODEL		REMARKS
26	6281 – 271 002 00	REGULATOR ASS'Y				

ENGINE

E393-G01…TMG18 – S

ENGINE

6003 - 097 - 190 - 00

FIG. 1 CYLINDER HEAD

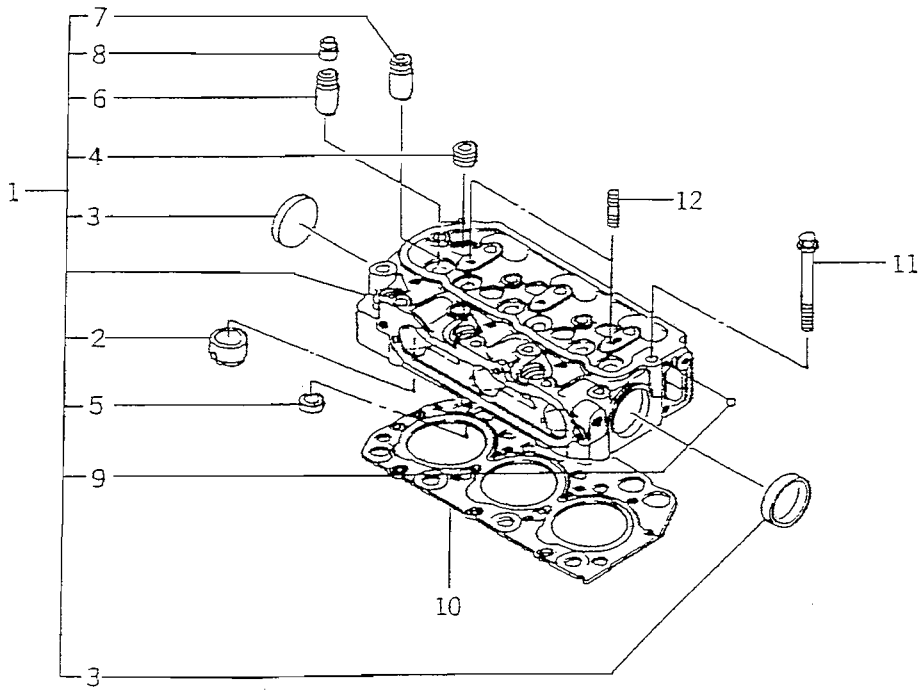

6003-101E

KEY	PART CODE	DESCRIPTION	QTY	TYPE OF MODEL E393G01		ITC	COL	GRP	REMARKS
1	6211 - 110 - 020 - 20	CYLINDERHEAD ASSY	1	*					
2	6211 - 150 - 008 - 00	PLUG (HOT) ASSY	3	*					
3	6911 - 129 - 006 - 00	CAP,SEALING	2	*					
4	6209 - 605 - 004 - 10	PLUG/PT1/2	5	*					
5	6211 - 715 - 002 - 00	SEAT,VALVE	3	*					
6	6211 - 721 - 001 - 00	BULBE GUIDE	3	*					
7	6211 - 721 - 002 - 00	GUIDE,VALVE	3	*					
8	6212 - 569 - 002 - 00	SEAL,OIL	6	*					
9	V682 - 200 - 000 - 60	BALL	1	*					
10	6211 - 141 - 008 - 20	GASKET/CYLINDERHEAD	1	*					
11	6209 - 000 - 003 - 00	BOLT/M10X1.25X82	14	*					
12	6909 - 830 - 212 - 00	STUD,HEAD COVER	2	*					

FIG. 2 CYLINDER HEAD COVER

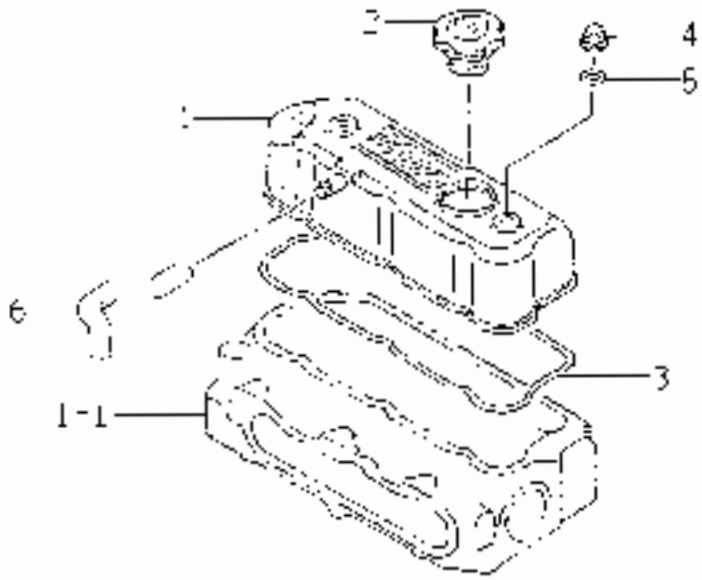

KEY	PART CODE	DESCRIPTION	QTY	TYPE OF MODEL		C	COLOR	REMARKS
1	6211-170-004-10	COVER,CYLINDER HEAD						
2	6211-701-001-10	CAP,OIL FILLER						
3	6211-174-004-00	SEAL,CYLINDER HEAD COVER						
4	0200-400-002-00	NUT,CAP	2					
5	8909-570-000-00	PACKING	2					
6	0209-360-021-10	HOSE/RUBBER						

FIG. 3 INLET MANIFOLD

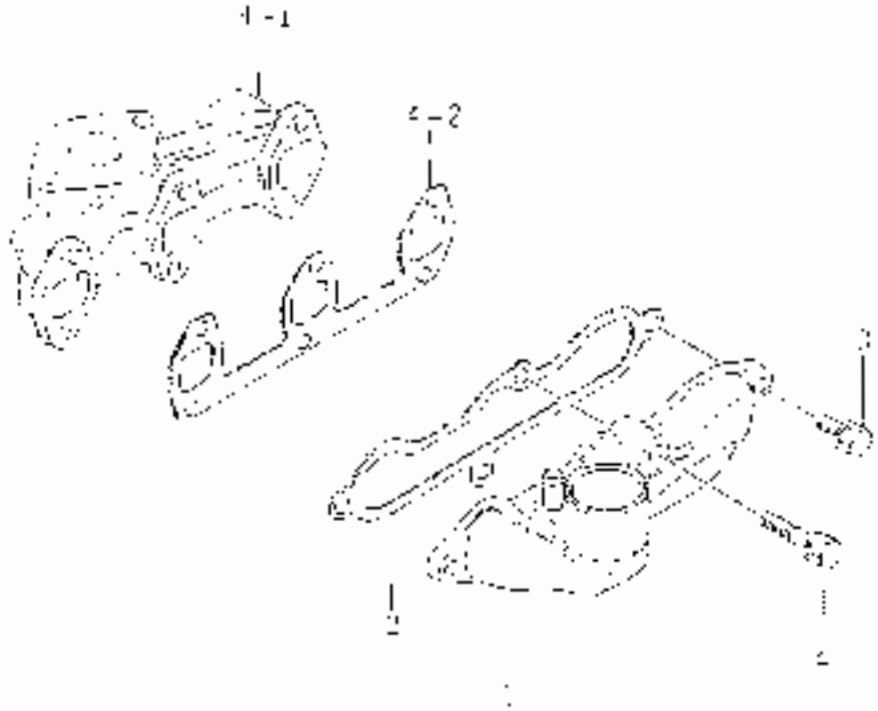

KEY	PART CODE	DESCRIPTION	QTY	TYPE OF MODEL			ITC	COL	GRP	REMARKS
1	02 4 - 111 - 011 20	MANIFOLD INLET ASSY	1	•						
2	5214 115 001 20	GASKET,INLET MANIFOLD	1	•						
3	V211 030 802 - 00	BOLT/M8X20	3	•						
4	3901 910 640 - 00	BOLT	1	•						

FIG. 4 EXHAUST MANIFOLD

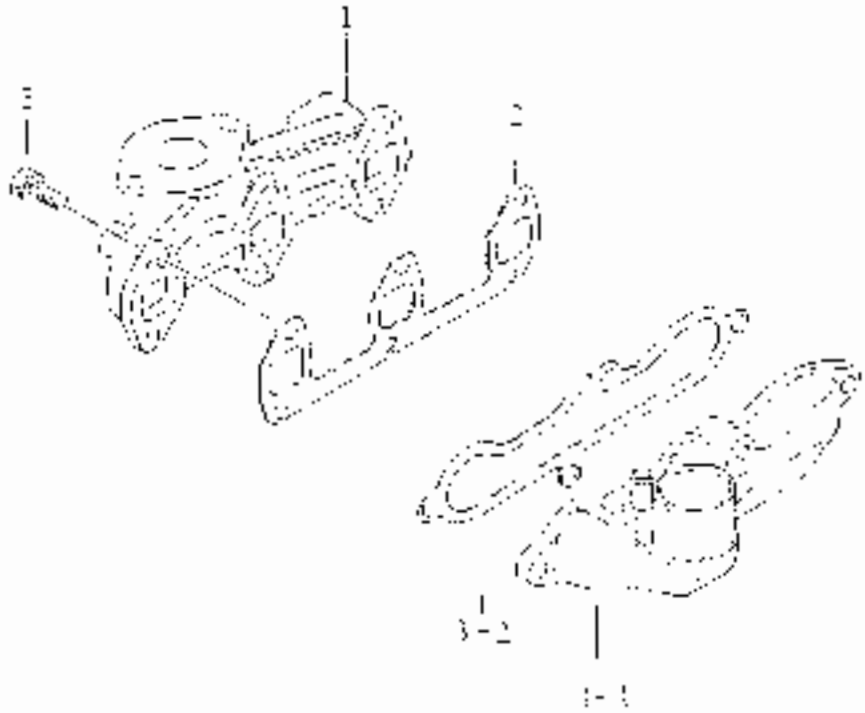

KEY	PART CODE	DESCRIPTION	QTY	TYPE OF MODEL					REMARKS
1	6214 141 010 10	MANIFOLD,EXH							
2	6214 145 001 30	GASKET,EXH MANIFOLD							
3	[illegible] 050 802 50	BOLT,SPRING [illegible]	8						

FIG. 5 CYLINDER BLOCK

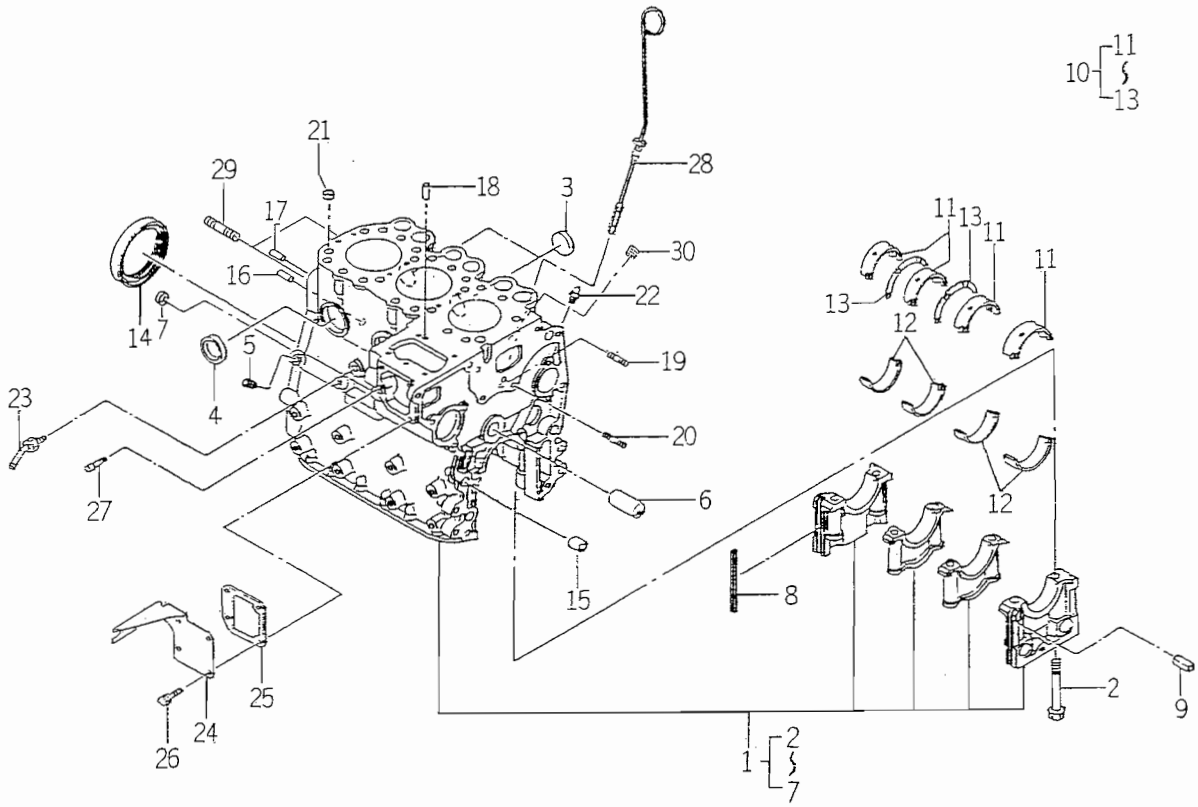

8003-201Y

KEY	PART CODE	DESCRIPTION	QTY	TYPE OF MODEL E393G01		ITC	COL	GRP	REMARKS
1	6211 - 210 - 050 - 10	CYLINDERBLOCK ASSY	1	*					
2	6209 - 000 - 004 - 10	BOLT	8	*					
3	6209 - 610 - 001 - 00	CAP,SEALING	2	*					
4	6911 - 219 - 195 - 00	CAP,SEALING	4	*					
5	6509 - 605 - 019 - 10	PLUG	3	*					
6	6212 - 531 - 005 - 10	PIN/IDLEGEAR	1	*					
7	6911 - 129 - 083 - 00	CAP,SEALING	1	*					
8	6211 - 258 - 001 - 00	SEAL,BEARING CAP	4	*					
9	6211 - 258 - 002 - 00	SEAL,BEARING CAP/7	2	*					
10	6211 - 510 - 001 - 00	METAL,CRANK SET	1	*					
11	6211 - 511 - 003 - 00	BEARING/CRANK/UPPER	4	*					
12	6211 - 511 - 004 - 00	BEARING/CRANK/LOWER	4	*					
13	6211 - 599 - 001 - 10	BEARING,THRUST CRANK	2	*					
14	6209 - 625 - 001 - 00	SEAL,OIL	1	*					
15	6209 - 749 - 001 - 20	PIN/TUBE	2	*					
16	6908 - 160 - 816 - 00	PIN	1	*					
17	V523 - 100 - 802 - 40	PIN	1	*					
18	6908 - 160 - 510 - 00	PIN	2	*					
19	6904 - 110 - 818 - 00	STUD	1	*					
20	6904 - 110 - 840 - 00	STUD/M8X40	1	*					
21	6294 - 453 - 002 - 00	DOWEL	2	*					
22	6909 - 902 - 299 - 00	NIPPLE	1	*					
23	6213 - 721 - 007 - 00	PIPE/WATERDRAIN	1	*					
24	6211 - 291 - 016 - 00	COVER/INJECTIONPUMP	1	*					
25	6211 - 292 - 001 - 20	GASKET/COVER	1	*					

FIG. 5 CYLINDER BLOCK

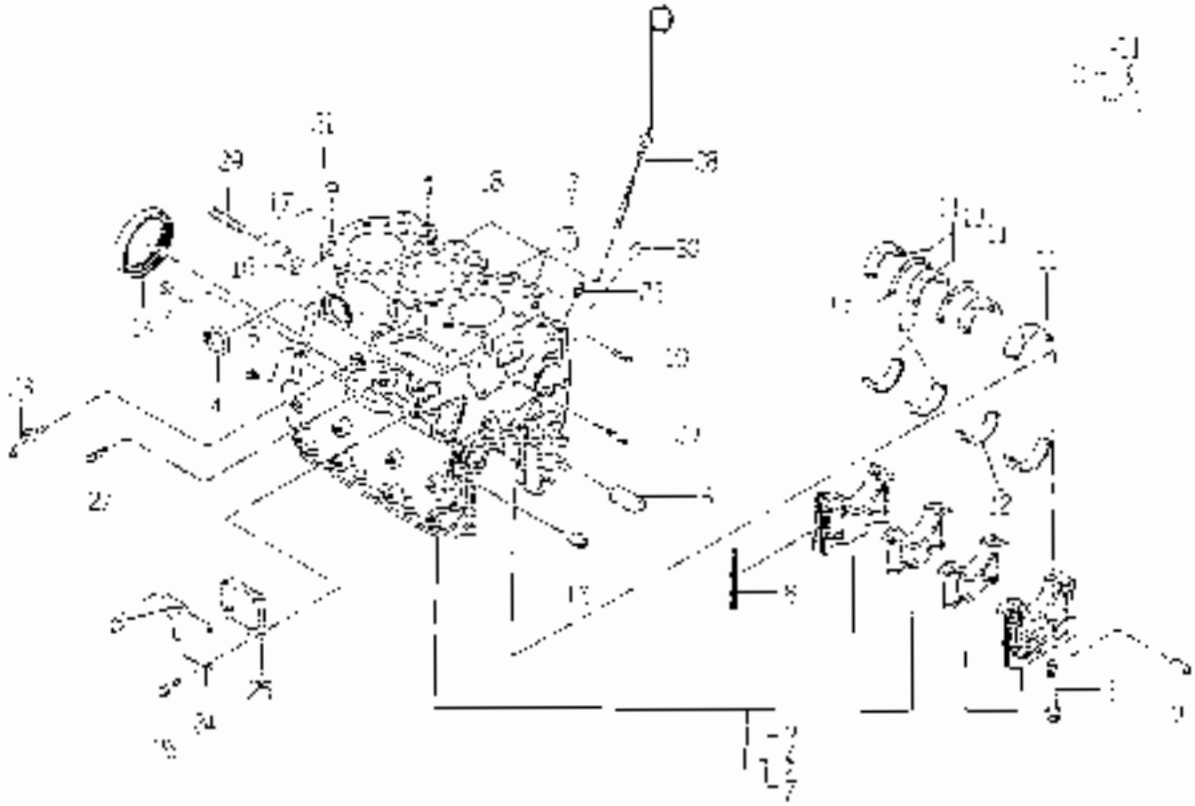

KEY	PART CODE	DESCRIPTION	QTY	TYPE OF MODEL					REMARKS
25	6601 910 - 514 - 00	BELT	4						
27	62 5 649 001 10	INSTARTING SPRING							
28	82 - 760 - 012 - 20	EVELGAGE							
29	0209 - 300 - 013 - 00	STUD	3						
30	0209 - 005 - 005 10	PLUG PT3/4	1						

FIG. 6 BEARING／UNDER SIZE (OPTION)

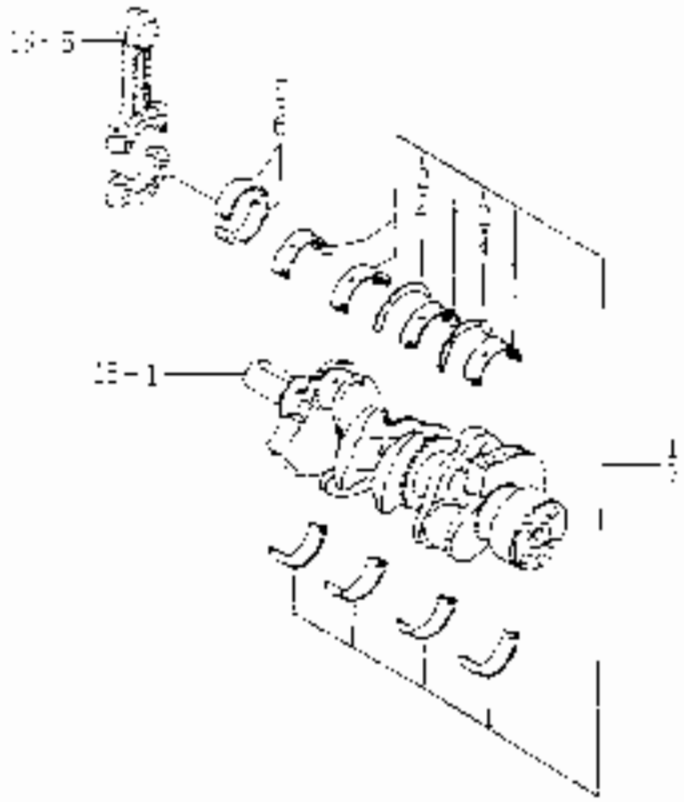

KEY	PART CODE	DESCRIPTION	QTY	TYPE OF MODEL					GRP	REMARKS
1	62[illegible] - 540 - 001 - 00	METAL,CRANK SET	1	T					050	
2	62[illegible] - 600 - 001 - [illegible]0	BEARING,THRUST CRANK	2	T						
3	62[illegible] - 550 - 001 - 00	METAL,CRANK SET	[illegible]	T					100	
4	62[illegible] - 500 - 001 - [illegible]0	BEARING,THRUST CRANK	2	T						
5	52[illegible]2 264 005 00	BEARING/O.RING 400/UN	6	T					050	
6	52[illegible]2 266 - 006 - 00	BEARING/O.RING 400/UN	6	T					100	

FIG. 7 OIL PAN

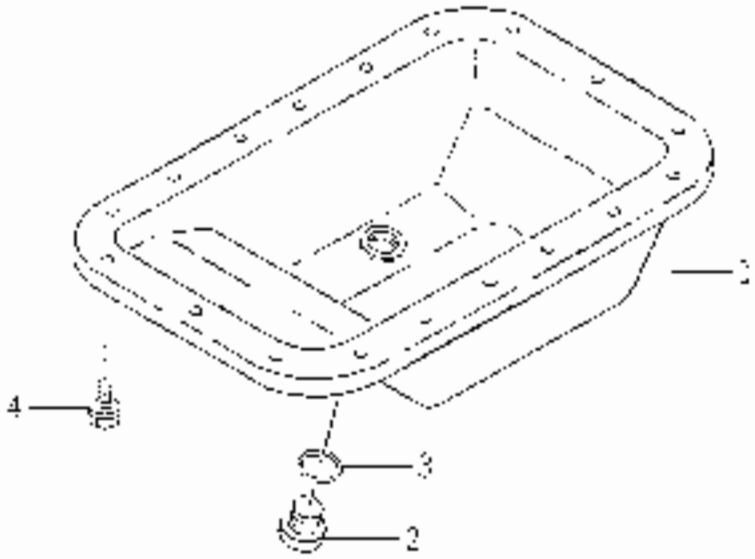

KEY	PART CODE	DESCRIPTION	QTY	TYPE OF MODEL / EFFECT	TC	COL	GRP	REMARKS
1	0211 - 381 - 010 - 10	PAN,OIL COMP	1	*				
2	3625 - 301 - 037 - 00	PLUG (D/14X15)	1	*				
3	V770 - 107 - 251 - 80	O RING/P18	1	*				
4	0901 - 910 - 012 - 00	BOLT,SEALS 6X12	18	*				

FIG. 8 REAR PLATE

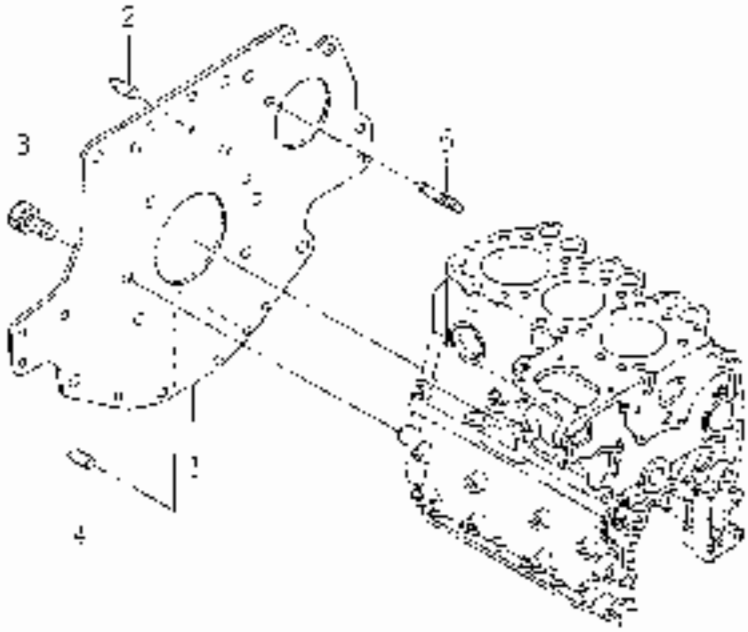

5-1

KEY	PART CODE	DESCRIPTION	QTY	TYPE OF MODEL C050CC1	I.T.C.	C.O.I.	G.A.P.	REMARKS
1	62[illegible] 341 032 00	PLATE/REAR	1	•				
2	62[illegible] - 342 - 007 - 10	PONTEH	1	•				
3	690[illegible] 51[illegible] 020 00	[illegible]50M/S (6/10x20	5	•				
4	8008 - 00 - 816 - 00	PIN	1	•				
5	6209 300 - 004 00	STUD	1	•				

FIG. 9 TIMING GEAR CASE

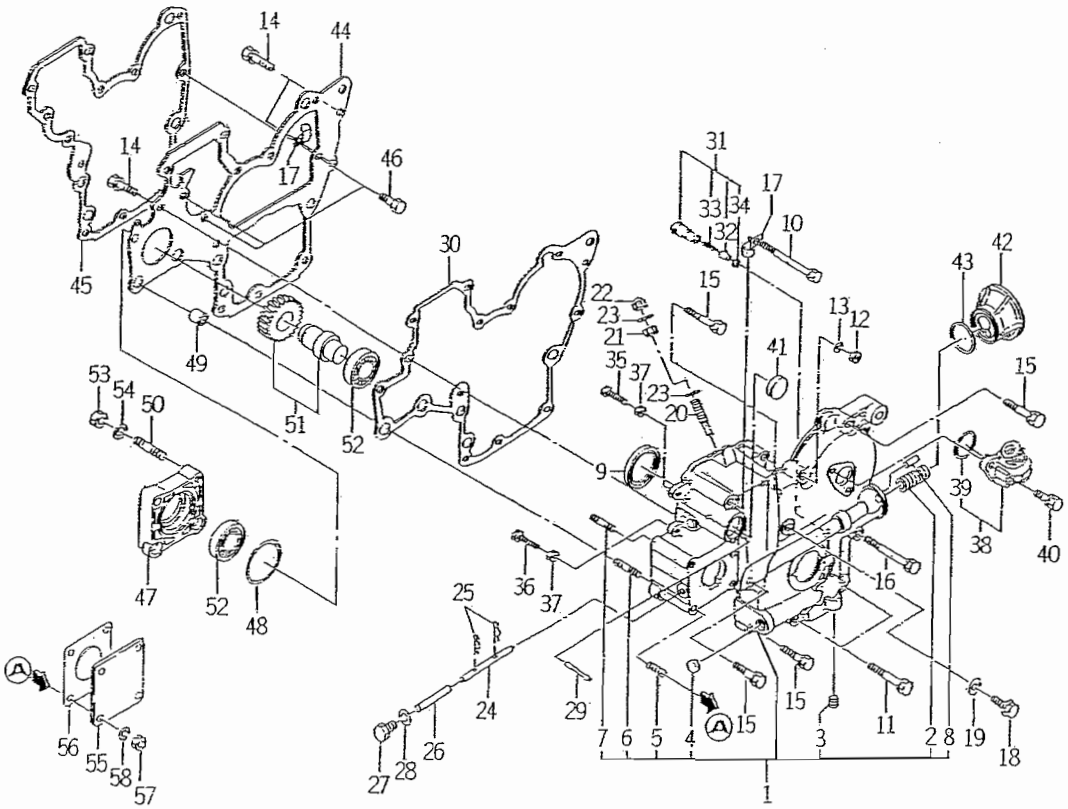

6003-240H

KEY	PART CODE	DESCRIPTION	QTY	TYPE OF MODEL E393G01		ITC	COL	GRP	REMARKS
1	6211 - 310 - 021 - 00	GEARCASE ASSY	1	*					
2	6213 - 319 - 004 - 00	CONNECTOR/OILFILTER	1	*					
3	6509 - 605 - 019 - 10	PLUG	1	*					
4	6209 - 610 - 002 - 10	CUP/SEALING/16	1	*					
5	6904 - 110 - 822 - 00	STUD	4	*					
6	6904 - 110 - 855 - 00	STUD	2	*					
7	6904 - 110 - 850 - 00	STUD	1	*					
8	6908 - 160 - 510 - 00	PIN	1	*					
9	6209 - 625 - 002 - 00	SEAL,OIL	1	*					
10	6209 - 030 - 005 - 00	BOLT/M8X85	1	*					
11	6509 - 000 - 084 - 00	BOLT/L=55	2	*					
12	6909 - 110 - 508 - 00	NUT/M8	1	*					
13	6909 - 150 - 508 - 00	WASHER	1	*					
14	V211 - 560 - 802 - 00	BOLT/M8X20	3	*					
15	6901 - 910 - 845 - 00	BOLT,SEMS/M8X45	5	*					
16	6209 - 030 - 006 - 00	BOLT/M8X75	1	*					
17	1425 - 621 - 004 - 00	CLAMP,HARNESS	2	*					
18	6209 - 046 - 001 - 00	BOLT/M8X30	1	*					
19	6209 - 500 - 003 - 00	WASHER/08X14X01	1	*					
20	6215 - 546 - 003 - 00	STOPPER/FULLLOAD	1	*					
21	6209 - 409 - 001 - 00	NUT/M8	1	*					
22	V341 - 120 - 008 - 00	NUT,CAP/M 8	1	*					
23	6209 - 920 - 002 - 00	PACKING	2	*					
24	6215 - 542 - 004 - 20	PIN/ARM	1	*					
25	P117 - 303 - 003 - 00	PIN/SNAP	2	*					

FIG. 9 TIMING GEAR CASE

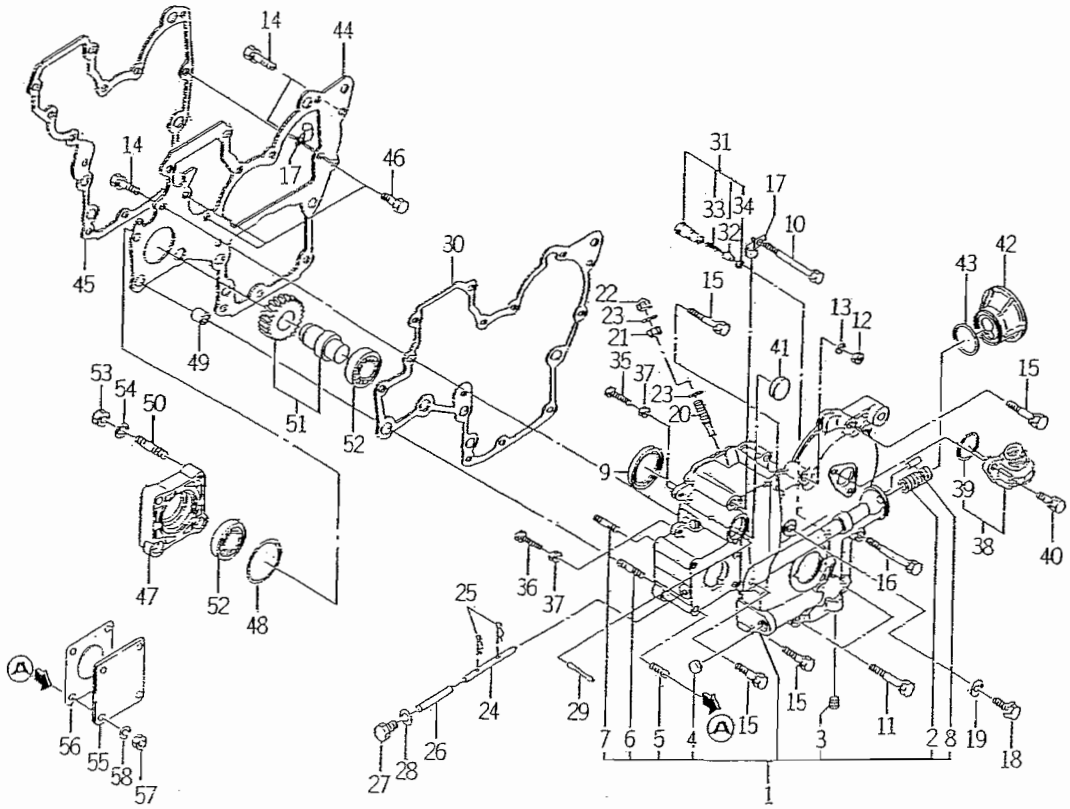

6003-240H

KEY	PART CODE	DESCRIPTION	QTY	TYPE OF MODEL E393G01		ITC	COL	GRP	REMARKS
26	6215 - 542 - 005 - 00	PIN	1	*					
27	6909 - 202 - 308 - 00	PLUG	1	*					
28	6209 - 500 - 003 - 00	WASHER/08X14X01	1	*					
29	6209 - 740 - 001 - 00	PIN,GROOVE	1	*					
30	6211 - 312 - 003 - 10	GASKET,GEAR CASE	1	*					
31	6213 - 160 - 002 - 00	VALVE/RELIEF ASSY	1	*					
32	6213 - 161 - 001 - 00	PISTON/RELIEF VALVE	1	*					
33	6213 - 164 - 001 - 00	SPRING/RELIEF VALVE	1	*					
34	V705 - 140 - 012 - 00	RING,SNAP/12 C	1	*					
35	6209 - 050 - 001 - 00	BOLT/M6	1	*					
36	6209 - 050 - 002 - 00	BOLT/M6	1	*					
37	6909 - 110 - 406 - 00	NUT	2	*					
38	6219 - 310 - 003 - 10	DRIVE/TACHOMETE ASSY	1	*					
39	V723 - 102 - 002 - 40	RING/O	1	*					
40	6901 - 910 - 616 - 00	BOLT,SEMS/M6X16	2	*					
41	3625 - 540 - 004 - 00	CAP,BLANK/30	1	*					
42	6213 - 211 - 001 - 10	SPACER,OIL FILTER	1	*					
43	V723 - 102 - 003 - 60	O - RING	1	*					
44	6211 - 311 - 011 - 00	PLATE FRONT	1	*					
45	6211 - 312 - 002 - 20	GASKET/PLATE	1	*					
46	6902 - 050 - 816 - 00	BOLT	3	*					
47	6211 - 319 - 003 - 00	SPACER	1	*					
48	V723 - 102 - 005 - 00	O - RING 1A S50	1	*					
49	6209 - 749 - 001 - 20	PIN/TUBE	2	*					
50	6904 - 110 - 822 - 00	STUD	1	*					

FIG. 9 TIMING GEAR CASE

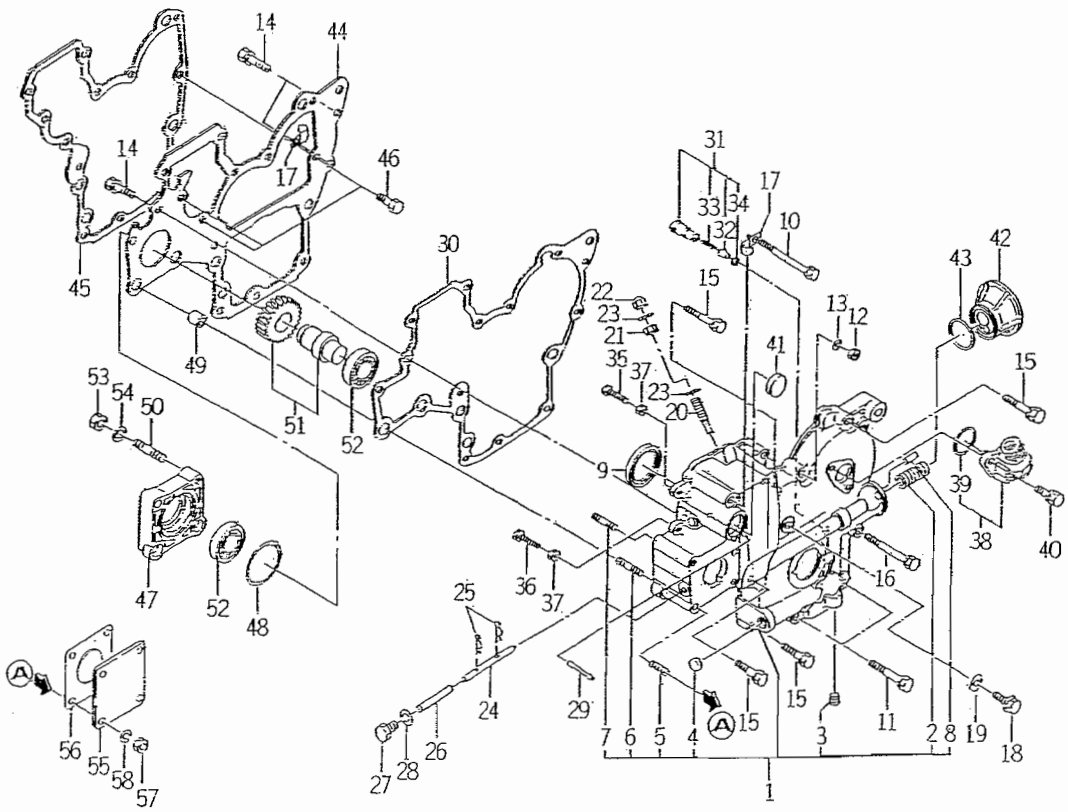

6003-240H

KEY	PART CODE	DESCRIPTION	QTY	TYPE OF MODEL E393G01		ITC	COL	GRP	REMARKS
51	6212 - 530 - 005 - 10	SHAFT/HYDRAULIC ASSY	1	*					
52	V600 - 110 - 600 - 50	BEARING,RB/6005	2	*					
53	6909 - 110 - 408 - 00	NUT/M8	4	*					
54	6909 - 150 - 508 - 00	WASHER	4	*					
55	6511 - 321 - 083 - 00	COVER	1	*					
56	6211 - 322 - 002 - 00	GASKET/COVER	1	*					
57	6909 - 110 - 408 - 00	NUT/M8	4	*					
58	6909 - 150 - 508 - 00	WASHER	4	*					

FIG. 10 HANGER

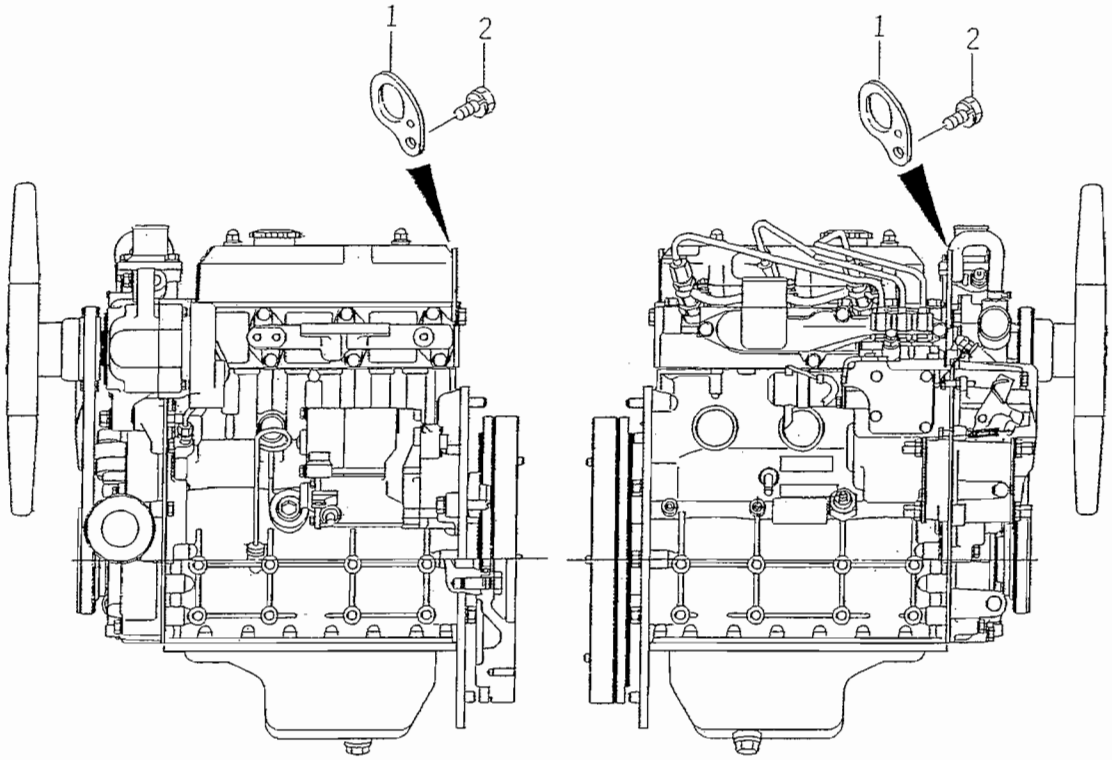

6003-290

KEY	PART CODE	DESCRIPTION	QTY	TYPE OF MODEL E393G01		ITC	COL	GRP	REMARKS
1	6211 - 777 - 007 - 20	HANGER	2	*					
2	6901 - 911 - 020 - 00	BOLT,SEMS/M10X20	2	*					

FIG. 11 VALVE

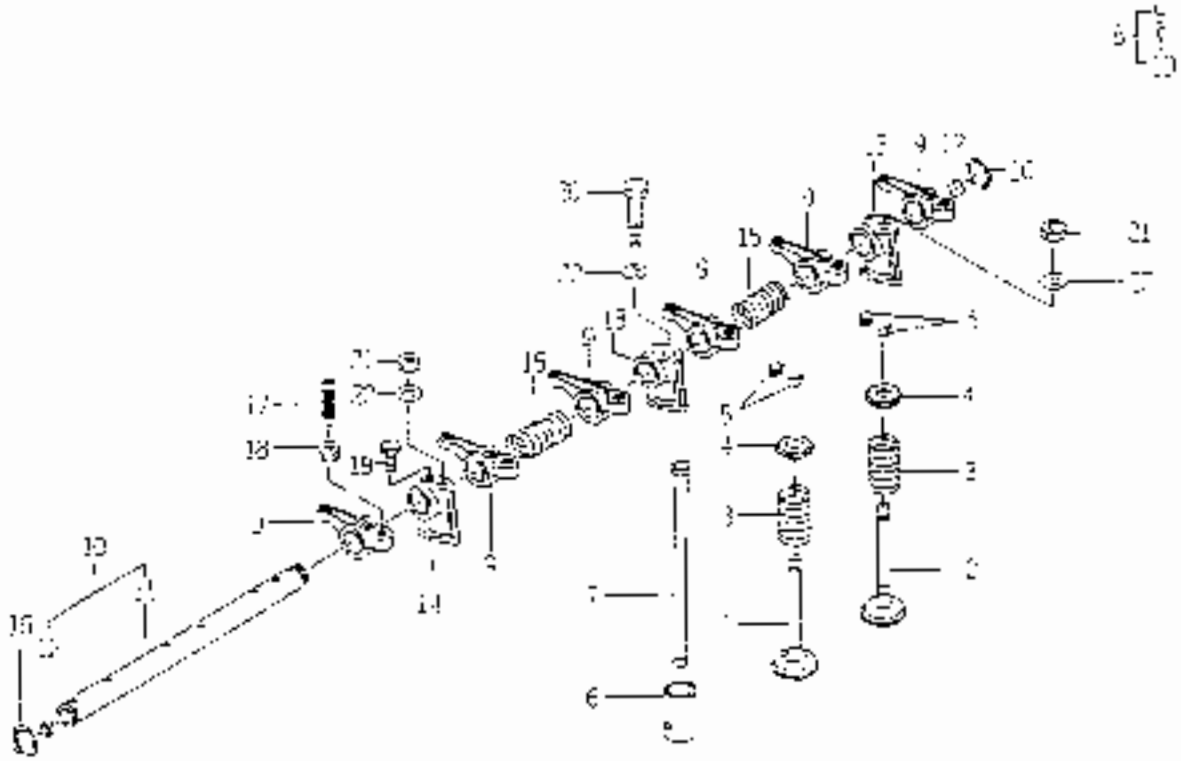

KEY	PART CODE	DESCRIPTION	QTY	TYPE OF MODEL L39S001	ITC	CODE	SRP	REMARKS
1	6212-551-001-00	VALVE,INTAKE	3					
2	6212-552-001-00	VALVE,EXHAUST	3					
3	6212-561-001-00	SPRING,VALVE	6					
4	6212-563-001-00	SEAT,VALVE SPRING	6					
5	6212-565-001-00	COTTER,VALVE	12					
6	6212-571-003-00	TAPPET	6					
7	6212-575-001-00	PUSHROD	6					
8	6212-600-002-00	SHAFT,ROCKER ASSY	1					
9	6212-611-004-10	ROCKER,ARM	6					
10	6212-620-001-10	SHAFT,ROCKER ARM ASSY	1					
11	6212-621-002-10	SHAFT/ROCKER ARM	1					
12	6212-620-002-10	PLUG	2					
13	6212-628-004-00	BRACKET,ROCKER SHAFT	2					
14	6212-628-005-00	BRACKET,ROCKER SHAFT	1					
15	6209-940-004-00	SPRING	2					
16	9704-140-010-00	RING,SNAP/18 C	2					
17	6212-614-002-00	SCREW ADJUST	6					
18	6208-400-003-00	NUT	6					
19	6209-000-002-00	BOLT						
20	6201-050-800-00	BOLT/M8X45	1					
21	6909-110-508-00	NUT/M8	2					
22	6200-500-005-00	WASHER/08X 5.5X1.0	3					

FIG. 12 CAM SHAFT

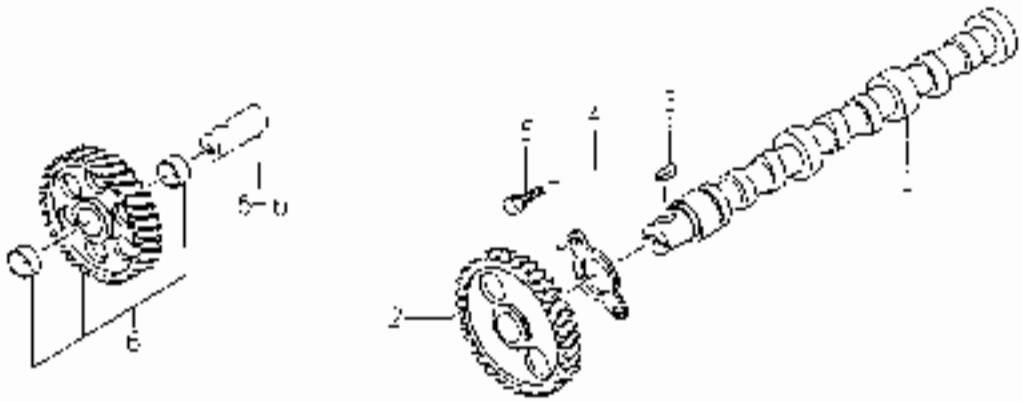

KEY	PART CODE	DESCRIPTION	QTY	TYPE OF MODEL						REMARKS
1	6212 - 511 - 002 - 00	SHAFT,CAM	1							
2	6212 - 522 - 003 - 00	GEAR,CAMSHAFT	1							
3	0908 - 000 - 716 - 00	KEY	1							
4	6212 - 535 - 001 - 00	PLATE,THRUST	1							
5	6801 - 510 - 612 - 00	BOLT,SEMS (M6X12)	2							
6	6212 - 523 - 003 - 00	GEAR,D.E	1							

FIG. 13 PISTON

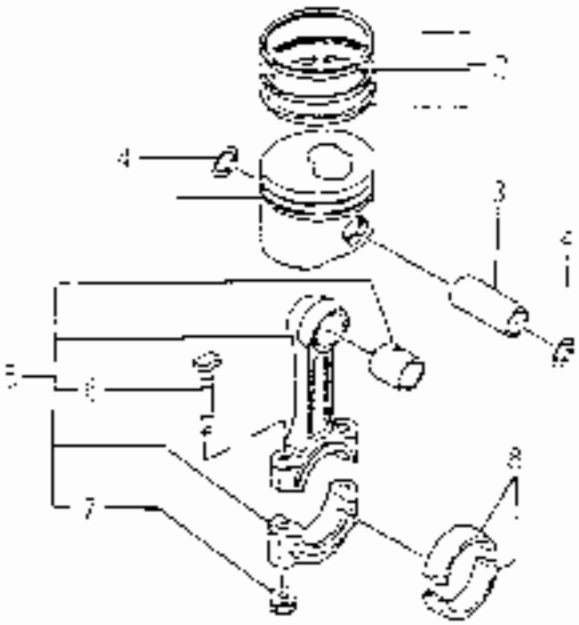

KEY	PART CODE	DESCRIPTION	QTY	TYPE OF MODEL E09C001		I T C	C O L	G R P	REMARKS
1	6212 - [illegible] - 015 - 10	PISTON	3						
2	6212 - [illegible] - 001 - 00	RING SET	3						
3	6212 - 211 - 001 - 10	PIN,PISTON	3						
4	0209 - 587 - 001 - 00	RING,SNAP	6						
5	6212 - 230 - 003 - 00	ROD,CONNECTING	3						
6	6212 - 235 - 001 - 00	BOLT,CONN ROD	6						
7	6200 - 440 - 003 - 00	NUT,FLANGE	6						
8	6212 - 251 - 006 - 00	BEARING/CONN ROD	6						

FIG. 14 PISTON／OVER SIZE (OPTION)

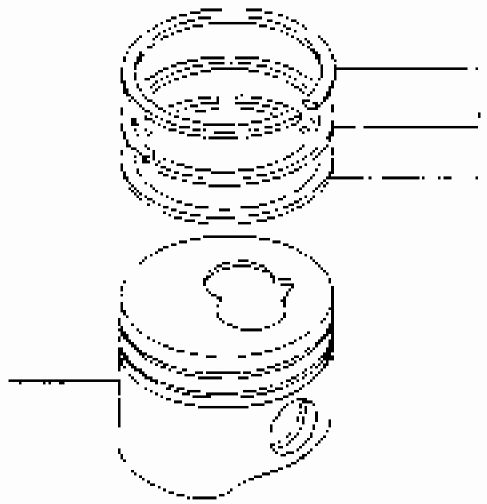

KEY	PART CODE	DESCRIPTION	QTY	TYPE OF MODEL E3930[illegible]	ITC	COL	GRP	REMARKS
1	6212-114-015-10	PISTON, OV	3	T				.050
2	6212-124-008-00	RING (PISTON/OV.50) SET	3	T				.050
3	6212-116-015-10	PISTON, OV	3	T				.100
4	6212-120-008-00	RING (PISTON/OV) SET	3	T				.100

FIG. 15 CRANK SHAFT

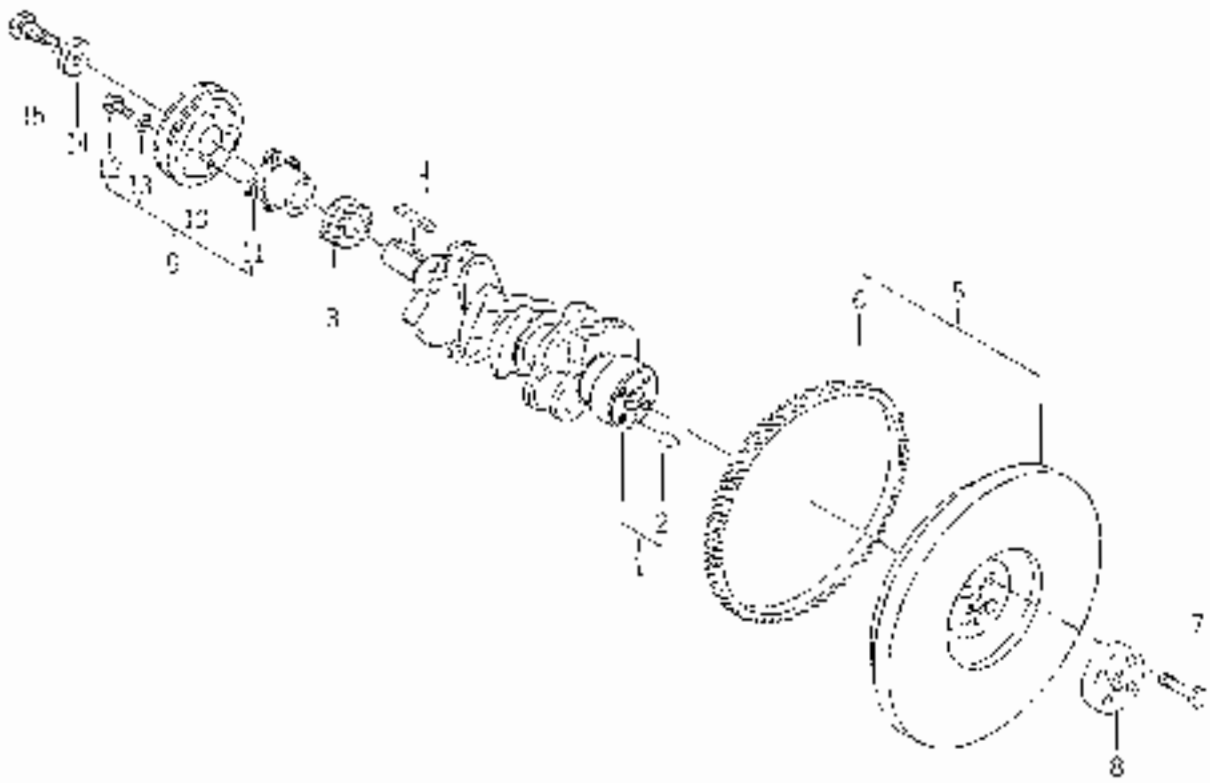

KEY	PART CODE	DESCRIPTION	QTY	TYPE OF MODEL		REMARKS
1	6212 - 310 - 006 - 10	CRANKSHAFT ASSY				
2	7623 - 101 - 001 - 30	PIN				
3	6212 - 521 - 002 - 00	GEAR CRANK SHAFT	1			
4	6008 - 000 - 750 - 00	KEY	1			
5	6212 - 930 - 046 - 00	FLYWHEEL ASSY	1			
6	6212 - 555 - 003 - 00	RINGGEAR	1			
7	5209 - 000 - 025 - 00	BOLT	4			
8	6212 - 330 - 004 - 10	BOSS/SPLINE	1			
9	6212 - 370 - 011 - 00	PULLEY ASSY	1			
10	6212 - 371 - 009 - 00	PULLEY				
11	6212 - 372 - 002 - 10	CENTER CRANK PULLEY				
12	6007 - 050 - 010 - 00	BOLT	4			
13	5009 - 150 - 506 - 00	WASHER,SP/NS	4			
14	6212 - 370 - 001 - 00	WASHER	1			
15	6001 - 066 - 645 - 00	SIL	1			

FIG. 16 OIL PUMP

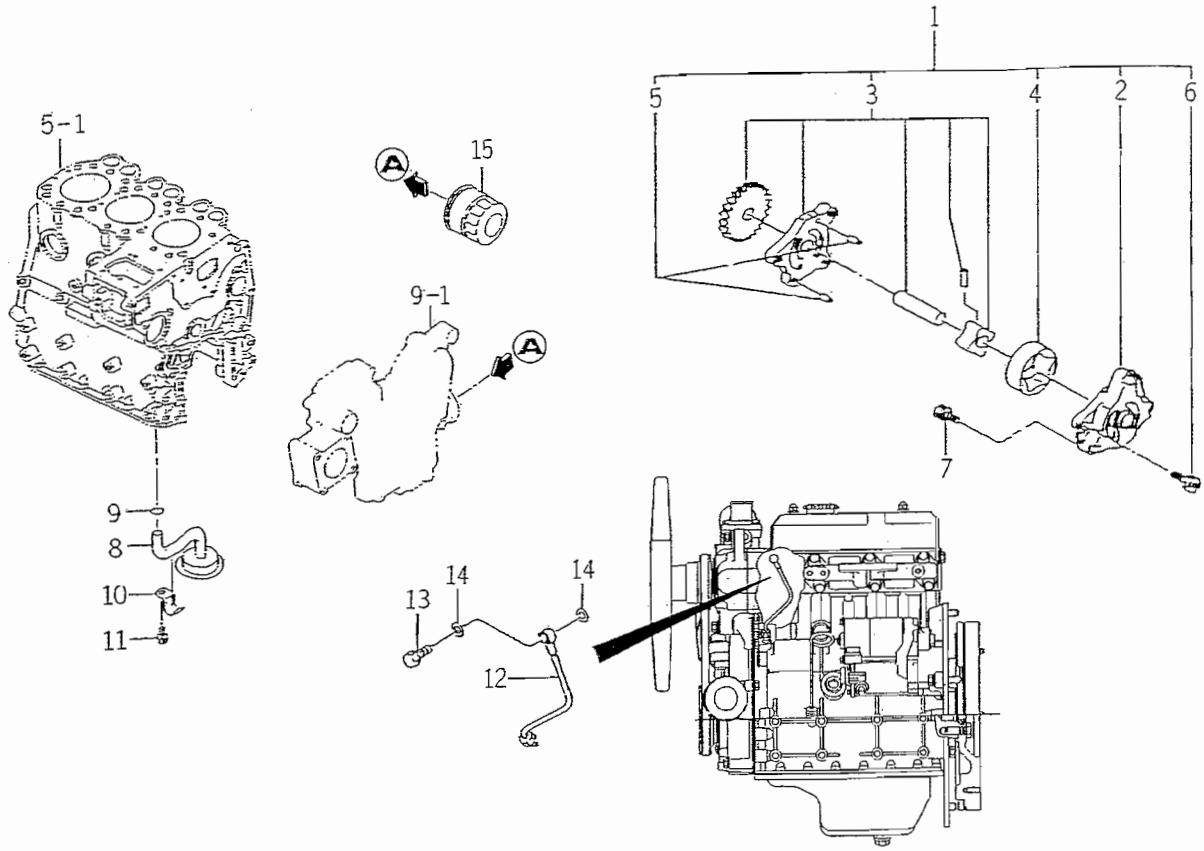

6003-401B

KEY	PART CODE	DESCRIPTION	QTY	TYPE OF MODEL E393G01		ITC	COL	GRP	REMARKS
1	6213 - 100 - 003 - 20	PUMP,OIL ASSY	1	*					
2	6213 - 111 - 001 - 30	BODY/OILPUMP	1	*					
3	6213 - 120 - 003 - 10	GEAR/OILPUMP ASSY	1	*					
4	6213 - 125 - 001 - 00	ROTOR/OUTER	1	*					
5	6213 - 129 - 003 - 00	PIN/STRAIGHT	2	*					
6	6213 - 119 - 001 - 00	BOLT/WS	3	*					
7	6901 - 910 - 625 - 00	BOLT	3	*					
8	6213 - 140 - 008 - 00	STRAINER	1	*					
9	V720 - 102 - 401 - 50	O - RING/P15	1	*					
10	6213 - 149 - 002 - 00	CLAMP,STRAINER	1	*					
11	6901 - 910 - 816 - 00	BOLT,SEMS/M8X16	1	*					
12	6213 - 311 - 003 - 10	PIPE,OIL	1	*					
13	6909 - 906 - 105 - 10	BOLT,JOINT	1	*					
14	6209 - 920 - 002 - 00	PACKING	2	*					
15	6213 - 240 - 002 - 00	CARTRIDGE,OIL FILTER	1	*					

FIG. 17 WATER PUMP

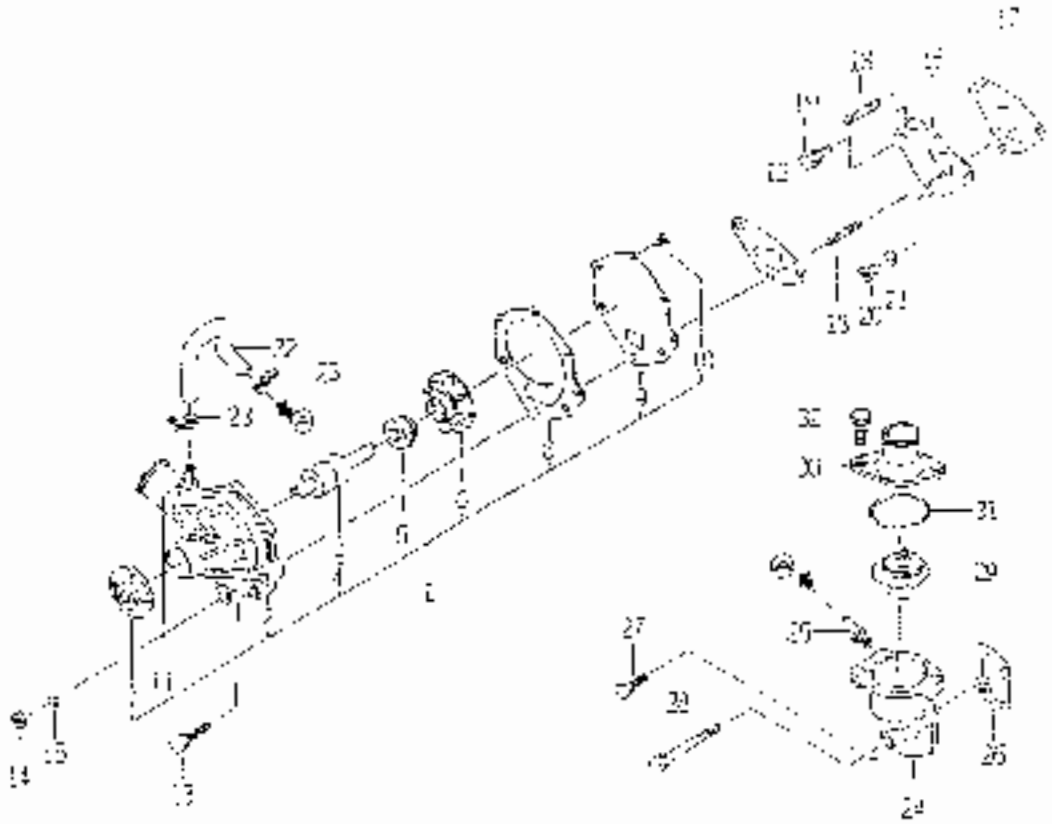

KEY	PART CODE	DESCRIPTION	QTY	TYPE OF MODEL E395001					REMARKS
1	6213-610-005-40	WATERPUMP ASSY	1						
2	6213-611-003-20	BODY/WATERPUMP							
3	6213-631-002-00	BEARING/WATER PUMP							
4	6213-631-006-00	BEARING/WATERPUMP	1						
5	6213-622-002-10	SEAL SET/WATER PUMP	1						
6	6213-621-003-00	ROTOR WATERPUMP	1						
7	6213-642-002-00	SEAL WATER PUMP PULLEY	1						
8	6213-513-002-00	GASKET	1						
9	6213-612-004-00	TUBE/WATER PUMP	1						
10	6213-616-005-00	FORK/WATER PUMP	3						
11	6213-615-002-00	PIPE/WATER PUMP	2						
12	6213-614-003-10	GASKET/WATER PUMP							
13	6201-910-845-00	BOLT/SEMS/M6X45							
14	5909-110-508-00	NUT M8	2						
15	5202-150-508-00	WASHER	2						
16	6213-612-005-00	SPACER/WATER PUMP	1						
17	6213-614-006-10	GASKET/SPACER	1						
18	6209-300-002-00	STUD	2						
19	V211-560-802-00	BOLT V8X30	1						
20	5909-110-500-00	NUT M6							
21	5909-150-508-00	WASHER							
22	6213-729-013-10	HOSE RUBBER							
23	5001-210-012-00	CLAMP WIRE/10-15	2						
24	6213-716-001-40	HOUSING/THERMOSTAT	1						
25	6213-721-003-00	PIPE/PUMP HOUSING	1						

FIG. 17 WATER PUMP

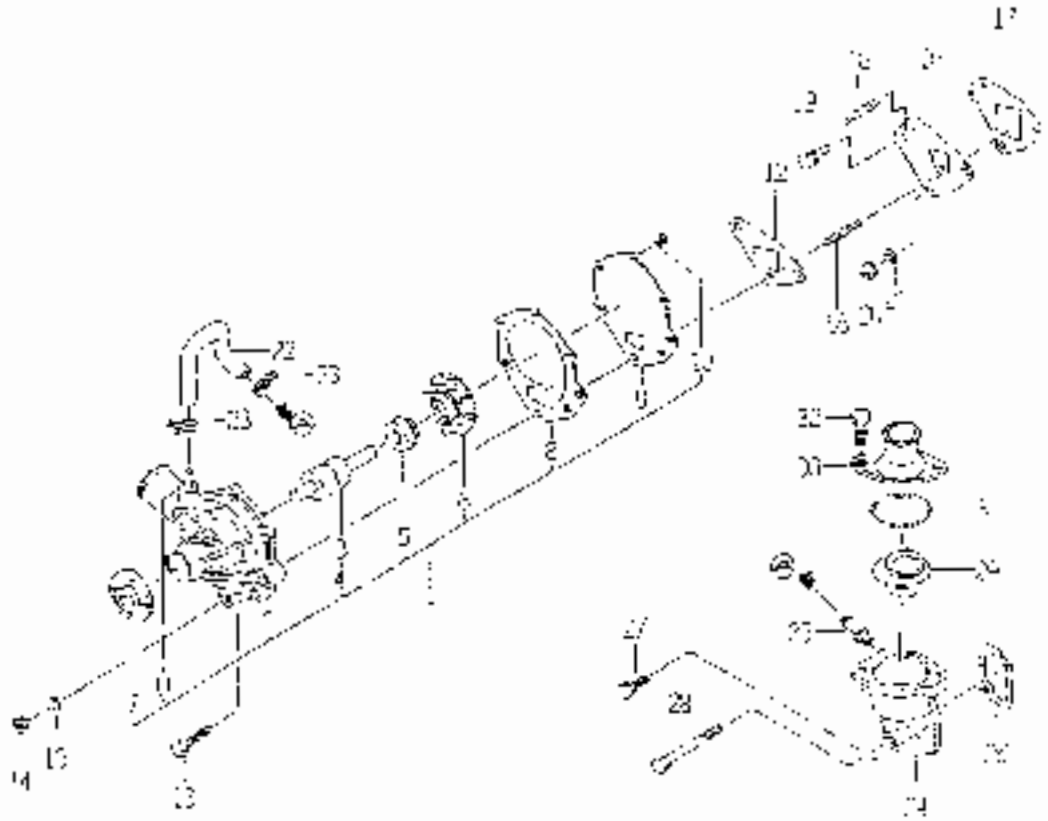

KEY	PART CODE	DESCRIPTION	QTY	TYPE OF MODEL E393001		COL	GRP	REMARKS
26	6213 - 743 - 000 - 10	GASKET/HOUSING						
27	V2 - 500 - 802 - 00	BOLT/M6×20						
28	8709 - 050 - 000 - 00	BOLT/M8×75	1					
29	6513 - 770 - 012 - 10	THERMOSTAT	1					
30	6213 - 711 - 000 - 00	PIPE/WATER OUTLET	1					
31	V723 - 102 - 000 - 50	O-RING	1					
32	6901 - 610 - 830 - 00	BOLT	2					

FIG. 18 COOLING FAN

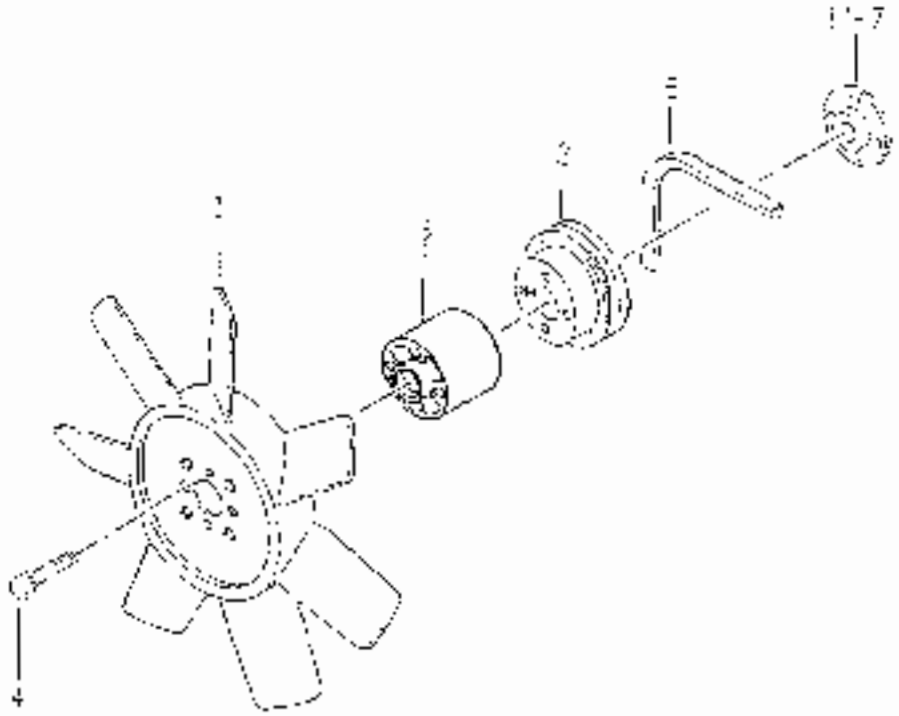

KEY	PART CODE	DESCRIPTION	QTY	TYPE OF MODEL F305G01		I/C	CODE	REMARKS
1	32113-550-007-00	FAN/COOLING	1					
2	32113-641-004-00	PULLEY/WATER PUMP						
3	62118-669-008-00	SPACER, FAN (4)						
4	6209-070-044-00	BELT/V-BELT	4					
5	32113-671-012-00	BELT/V-BELT/FAN						

FIG. 19 INJECTION NOZZLE

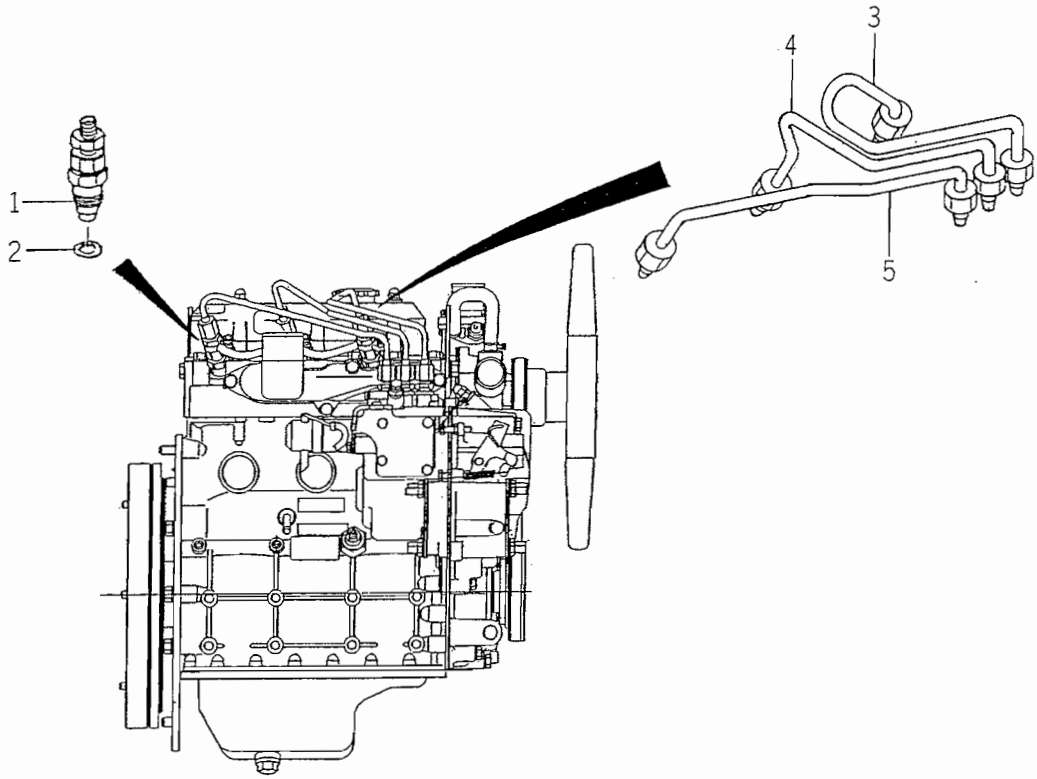

6003-501E

KEY	PART CODE	DESCRIPTION	QTY	TYPE OF MODEL		ITC	COL	GRP	REMARKS
				E393G01					
1	6215 - 300 - 037 - 00	INJECTIONNOZZLE ASSY	3	*					FIG 024
2	6215 - 315 - 002 - 00	GASKET,NOZZLE	3	*					
3	6215 - 411 - 075 - 00	PIPE/INJECTION ASSY	1	*					
4	6215 - 411 - 076 - 00	PIPE/INJECTION ASSY	1	*					
5	6215 - 411 - 077 - 00	PIPE/INJECTION ASSY	1	*					

FIG. 20 INJECTION PUMP

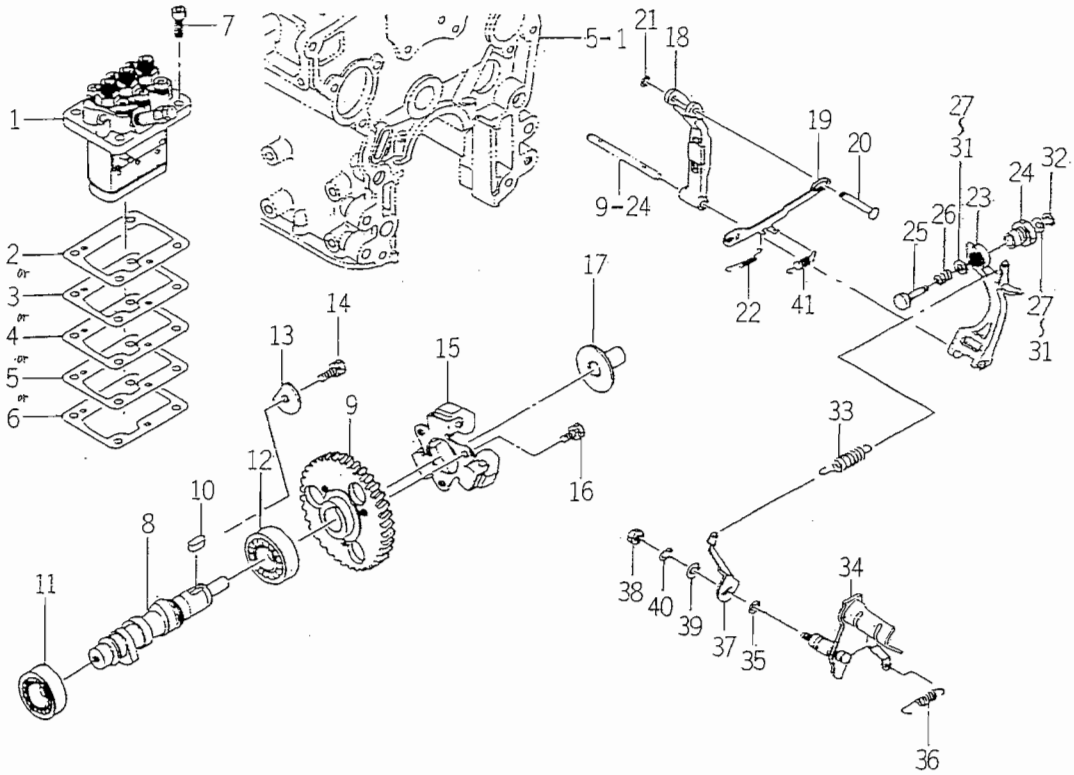

6003-510X

KEY	PART CODE	DESCRIPTION	QTY	TYPE OF MODEL E393G01		ITC	COL	GRP	REMARKS
1	6215 - 600 - 109 - 10	INJECTIONPUMP ASSY	1	*					FIG 025
2	6219 - 752 - 001 - 00	SHIM,INJECTION PUMP	1	*					
3	6219 - 752 - 002 - 00	SHIM,INJECTION PUMP	1	*					
4	6219 - 752 - 003 - 00	SHIM,INJECTION PUMP	1	*					
5	6219 - 752 - 004 - 00	SHIM,INJECTION PUMP	1	*					
6	6219 - 752 - 005 - 00	SHIM,INJECTION PUMP	1	*					
7	6209 - 056 - 001 - 00	BOLT/M6X18	4	*					
8	6215 - 621 - 001 - 30	CAMSHAFT/INJPUMP	1	*					
9	6212 - 524 - 002 - 00	GEAR,INJ PUMP	1	*					
10	6908 - 000 - 716 - 00	KEY	1	*					
11	V600 - 110 - 620 - 30	BEARING,RB/6203	1	*					
12	V600 - 110 - 600 - 40	BEARING,RB/6004	1	*					
13	6212 - 535 - 002 - 00	PLATE,THRUST INJPUMP	1	*					
14	6901 - 910 - 612 - 00	BOLT,SEMS/M6X12	1	*					
15	6215 - 520 - 001 - 00	FLYWEIGHT	1	*					
16	6209 - 030 - 043 - 00	BOLT/M6X10	3	*					
17	6215 - 526 - 001 - 10	PIECE,THRUST	1	*					
18	6215 - 541 - 001 - 00	ARM,FLOATING	1	*					
19	6215 - 543 - 001 - 10	LINK,CONTROL	1	*					
20	6215 - 542 - 006 - 00	PIN,CONTROL	1	*					
21	V710 - 140 - 004 - 00	RING,SNAP/ 4 E	1	*					
22	6215 - 549 - 003 - 00	SPRING,SETTING	1	*					
23	6215 - 541 - 016 - 30	ARM/TENSION	1	*					
24	6215 - 549 - 028 - 10	CASE/ADAPTER	1	*					
25	6215 - 549 - 027 - 10	PIN/ADAPTER	1	*					

FIG. 20 INJECTION PUMP

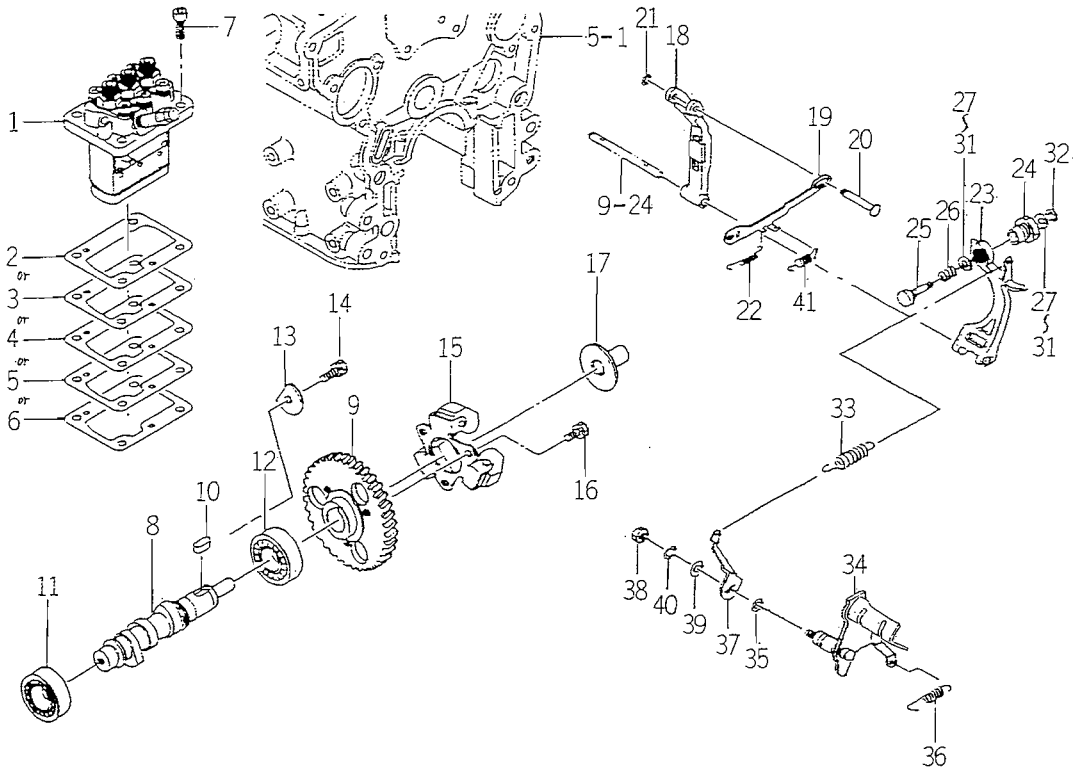

6003-510K

KEY	PART CODE	DESCRIPTION	QTY	TYPE OF MODEL E393G01		I T C	C O L	G R P	REMARKS
26	6215 - 549 - 005 - 10	SPRING ADAPTER	1	*					
27	6215 - 549 - 006 - 00	SHIM,ADAPTER	2	*					
28	6215 - 549 - 009 - 00	SHIM,ADAPTER	2	*					
29	6215 - 549 - 010 - 00	SHIM,ADAPTER	2	*					
30	6215 - 549 - 023 - 00	SHIM/ADAPTER	1	*					
31	6215 - 549 - 024 - 00	SHIM/ADAPTER	1	*					
32	V710 - 140 - 004 - 00	RING,SNAP/ 4 E	1	*					
33	6215 - 531 - 021 - 00	SPRING/GOVERNER	1	*					
34	6215 - 541 - 024 - 10	LEVER/CONTROL COMP	1	*					
35	V720 - 101 - 900 - 80	O - RING/P 8	1	*					
36	6209 - 580 - 002 - 10	SPRING,RETURN	1	*					
37	6215 - 549 - 007 - 10	ARM/CONTROL	1	*					
38	6909 - 110 - 406 - 00	NUT	1	*					
39	V411 - 260 - 006 - 00	WASHER / M6	1	*					
40	6909 - 150 - 506 - 00	WASHER,SP/M6	1	*					
41	6215 - 549 - 008 - 00	SPRING,STARTING	1	*					

FIG. 21 FUEL PIPE

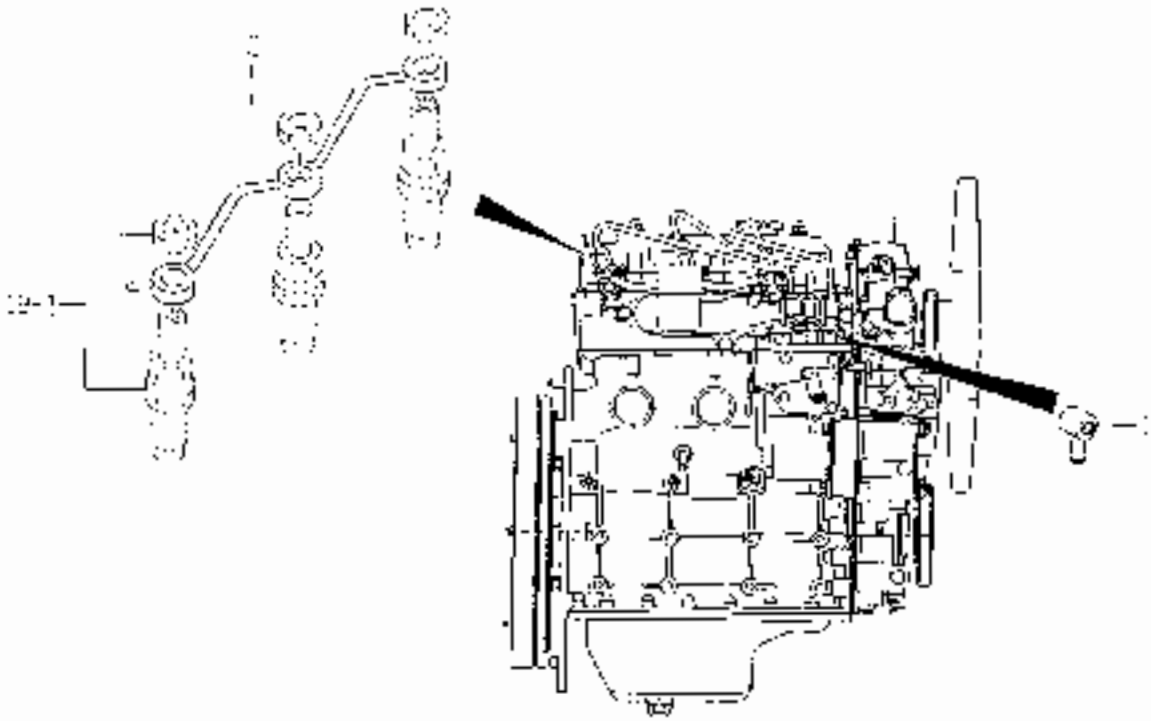

KEY	PART CODE	DESCRIPTION	QTY	TYPE OF MODEL D3000	ITC	COL	GRF	REMARKS
1	6215-412-000-00	CONNECTOR/FUEL	1					
2	6215-411-074-10	PIPE/FUEL	1					

FIG. 22 ELECTRIC (1)

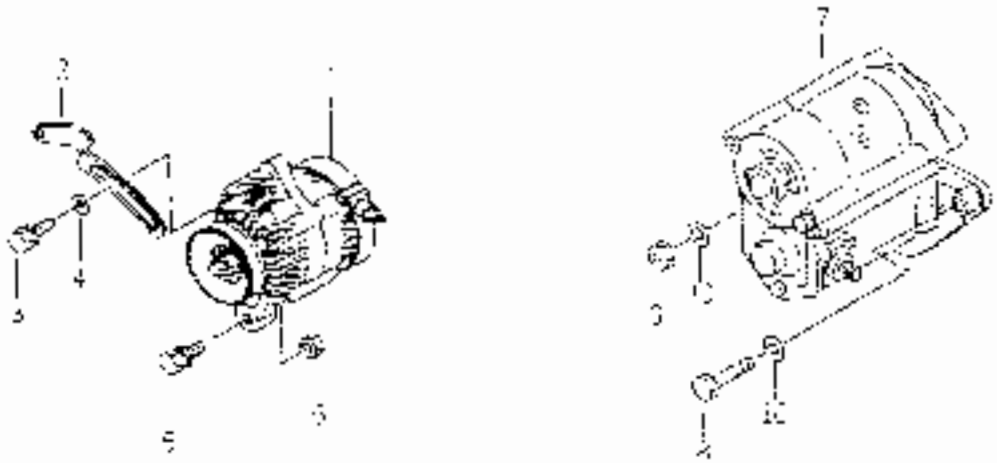

KEY	PART CODE	DESCRIPTION	QTY	TYPE OF WORK	I C	C O L	G H P	REMARKS
1	6281 - 200 - 005 - 00	GENERATOR ASSY						G 027
2	6213 - 674 - 003 - 10	PLATE/ADJUST						
3	V211 - 530 - 802 - 00	BOLT/V5X20	1					
4	1373 - 121 - 001 - 00	WASHER/8X22X2	1					
5	6200 - 021 - 065 - 00	BOLT/W3P	1					
6	9309 - 110 - 410 - 00	NUT/M10	1					
7	6281 - 100 - 005 - 00	STARTER ASSY	1					HC 026
8	V203 - 201 - 004 - 00	BOLT	1					
9	9000 - 110 - 410 - 00	NUT/V10						
10	6505 - 160 - 510 - 00	WASHER/SP/V 6	2					

FIG. 23 ELECTRIC (2)

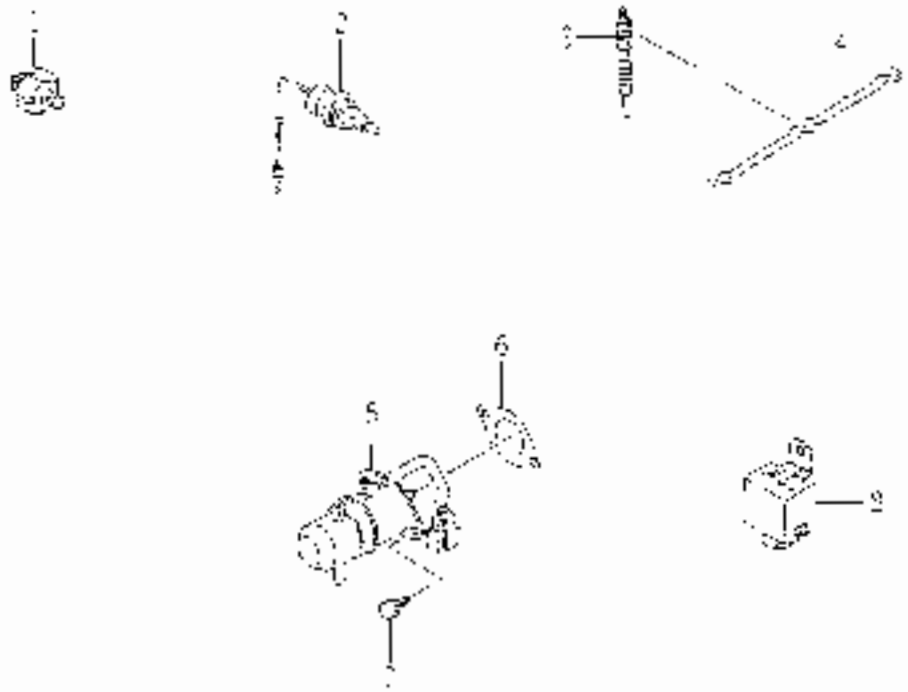

KEY	PART CODE	DESCRIPTION	QTY	TYPE OF MODEL.		I C O T P	REMARKS
				8S0S001			
1	6281 - 971 - 003 - 00	SWITCH/OIL PRESSURE	1	•			
2	6282 - 450 - 002 - 00	SWITCH/OVERHEAT	1	•			
3	6281 - 710 - 000 - 00	SOLENOID	2	•			
4	6219 - 732 - 002 - 00	CONNECTOR/BLOCK PLUG	1	•			
5	6281 - 910 - 001 - 00	SENSOR	1	•			
6	6200 - 030 - 002 - 10	GASKET	1	•			
7	0001 - 910 - 612 - 00	BOLT/ED/6/V5x12	2	•			
8	6281 - 920 - 001 - 00	RELAY/SOLENOID	1	•			

FIG. 24 COMPONENT PARTS FOR 6215 – 300 – 037 – 00 ON Fig.19

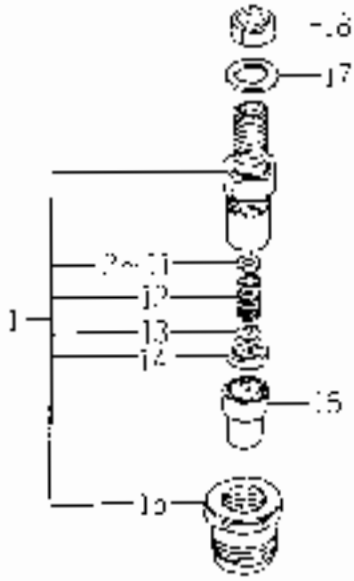

KEY	PART CODE	DESCRIPTION	QTY	TYPE OF MODEL				REMARKS
				ES3001		C	COL	GAP	
1	6215 – 300 – 037 – 00	HOLDER NOZZLE ASSY	3						
2	6215 – 345 – 044 – 00	SHIM/T = 0.1	3						
3	6215 – 345 – 045 – 00	SHIM/T = 0.2	3						
4	6215 – 345 – 046 – 00	SHIM/T = 0.3	3						
5	6215 – 345 – 047 – 00	SHIM/T = 0.4	3						
6	6215 – 345 – 048 – 00	SHIM/T = 0.5	3						
7	6215 – 345 – 049 – 00	SHIM/T = 0.52	3						
8	6215 – 345 – 050 – 00	SHIM/T = 0.54	3						
9	6215 – 345 – 051 – 00	SHIM/T = 0.56	3						
10	6215 – 345 – 052 – 00	SHIM/T = 0.58	3						
11	6215 – 345 – 053 – 00	SHIM/T = 0.6	3						
12	6215 – 343 – 002 – 00	SPRING/NOZZLE	3						
13	6215 – 342 – 002 – 00	SEAT/SPRING	3						
14	6215 – 330 – 004 – 00	SPACER	3						
15	6215 – 300 – 006 – 00	NUT NOZZLE RETAINING	3						
16	6215 – 311 – 005 – 00	NOZZLE	3						
17	6215 – 360 – 003 – 00	GASKET	3						
18	6215 – 355 – 004 – 00	NUT	3						

FIG. 25 COMPONENT PARTS FOR 6215 – 600 – 109 – 10 ON Fig.20

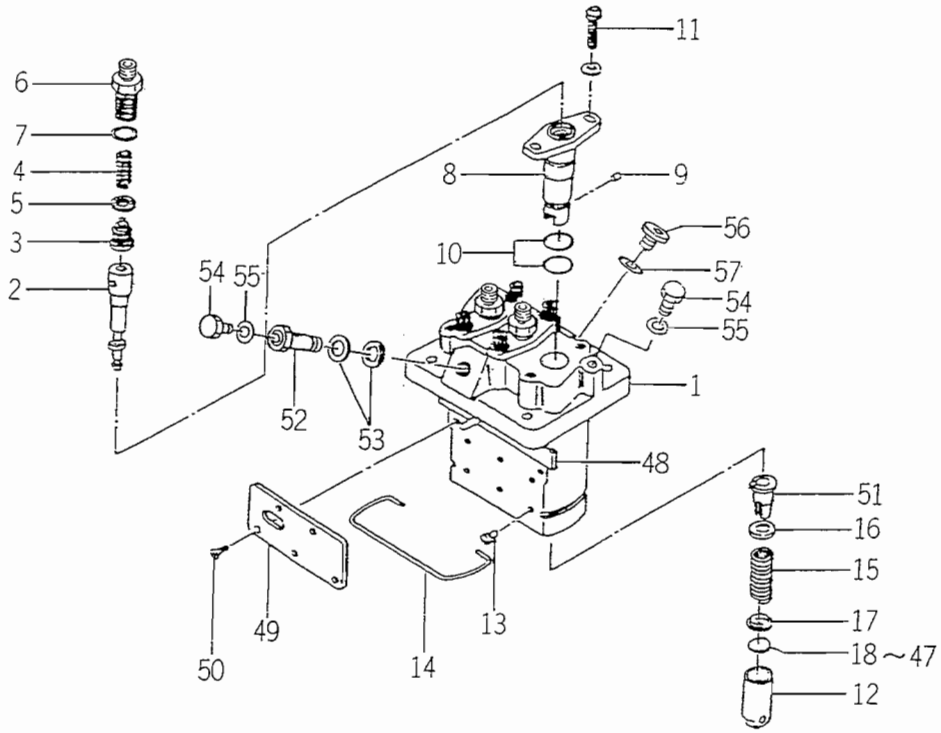

6215-6001

KEY	PART CODE	DESCRIPTION	QTY	TYPE OF MODEL E393G01		ITC	COL	GRP	REMARKS
1	6215 – 611 – 002 – 00	HOUSING,PUMP	1	*					
2	6215 – 631 – 017 – 00	PLUNGER ASSY	3	*					
3	6215 – 641 – 007 – 00	DELIVERYVALVE	3	*					
4	6215 – 643 – 002 – 00	SPRING DELIVERY VALV	3	*					
5	6215 – 649 – 003 – 00	GASKET	3	*					
6	6215 – 644 – 002 – 00	HOLDER DELIVERY VALV	3	*					
7	6215 – 649 – 004 – 00	O – RING	3	*					
8	6215 – 635 – 002 – 00	SLEEVE,FRANGE	3	*					
9	6215 – 649 – 005 – 00	PIN	3	*					
10	6215 – 649 – 006 – 00	O – RING	6	*					
11	6215 – 649 – 007 – 00	SCREW	6	*					
12	6215 – 622 – 002 – 00	TAPPET	3	*					
13	6215 – 629 – 017 – 00	PIN	3	*					
14	6215 – 629 – 018 – 00	RING,SNAP	1	*					
15	6215 – 634 – 002 – 00	SPRING,PLUNGER	3	*					
16	6215 – 639 – 006 – 00	SEAT,SPRING	3	*					
17	6215 – 639 – 007 – 00	SEAT,SPRING	3	*					
18	6215 – 629 – 020 – 00	PLATE/T = 1.80	3	*					
19	6215 – 629 – 021 – 00	PLATE/T = 1.85	3	*					
20	6215 – 629 – 022 – 00	PLATE/T = 1.90	3	*					
21	6215 – 629 – 023 – 00	PLATE/T = 1.95	3	*					
22	6215 – 629 – 024 – 00	PLATE/T = 2.00	3	*					
23	6215 – 629 – 025 – 00	PLATE/T = 2.05	3	*					
24	6215 – 629 – 026 – 00	PLATE/T = 2.10	3	*					
25	6215 – 629 – 027 – 00	PLATE/T = 2.15	3	*					

FIG. 25 COMPONENT PARTS FOR 6215 – 600 – 109 – 10 ON Fig.20

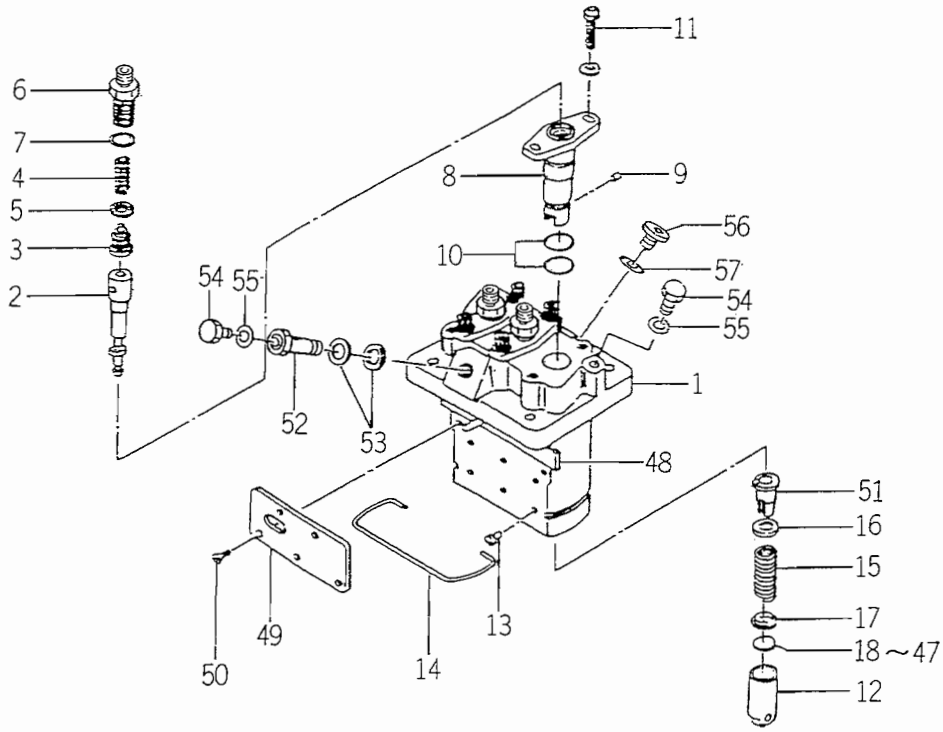

6215-6001

KEY	PART CODE	DESCRIPTION	QTY	TYPE OF MODEL E393G01		ITC	COL	GRP	REMARKS
26	6215 – 629 – 028 – 00	PLATE/T = 2.20	3	*					
27	6215 – 629 – 029 – 00	PLATE/T = 2.25	3	*					
28	6215 – 629 – 030 – 00	PLATE/T = 2.30	3	*					
29	6215 – 629 – 031 – 00	PLATE/T = 2.35	3	*					
30	6215 – 629 – 032 – 00	PLATE/T = 2.40	3	*					
31	6215 – 629 – 033 – 00	PLATE/T = 2.45	3	*					
32	6215 – 629 – 034 – 00	PLATE/T = 2.50	3	*					
33	6215 – 629 – 068 – 00	PLATE/T = 1.825	3	*					
34	6215 – 629 – 069 – 00	PLATE/T = 1.875	3	*					
35	6215 – 629 – 070 – 00	PLATE/T = 1.925	3	*					
36	6215 – 629 – 071 – 00	PLATE/T = 1.975	3	*					
37	6215 – 629 – 072 – 00	PLATE/T = 2.025	3	*					
38	6215 – 629 – 073 – 00	PLATE/T = 2.075	3	*					
39	6215 – 629 – 074 – 00	PLATE/T = 2.125	3	*					
40	6215 – 629 – 075 – 00	PLATE/T = 2.175	3	*					
41	6215 – 629 – 076 – 00	PLATE/T = 2.225	3	*					
42	6215 – 629 – 077 – 00	PLATE/T = 2.275	3	*					
43	6215 – 629 – 078 – 00	PLATE/T = 2.325	3	*					
44	6215 – 629 – 079 – 00	PLATE/T = 2.375	3	*					
45	6215 – 629 – 080 – 00	PLATE/T = 2.425	3	*					
46	6215 – 629 – 081 – 00	PLATE/T = 2.475	3	*					
47	6215 – 629 – 082 – 00	PLATE/T = 2.525	3	*					
48	6215 – 637 – 002 – 00	ROD,CONTROL	1	*					
49	6215 – 612 – 002 – 00	PLATE	1	*					
50	6215 – 619 – 012 – 00	SCREW	4	*					

FIG. 25 COMPONENT PARTS FOR 6215 – 600 – 109 – 10 ON Fig.20

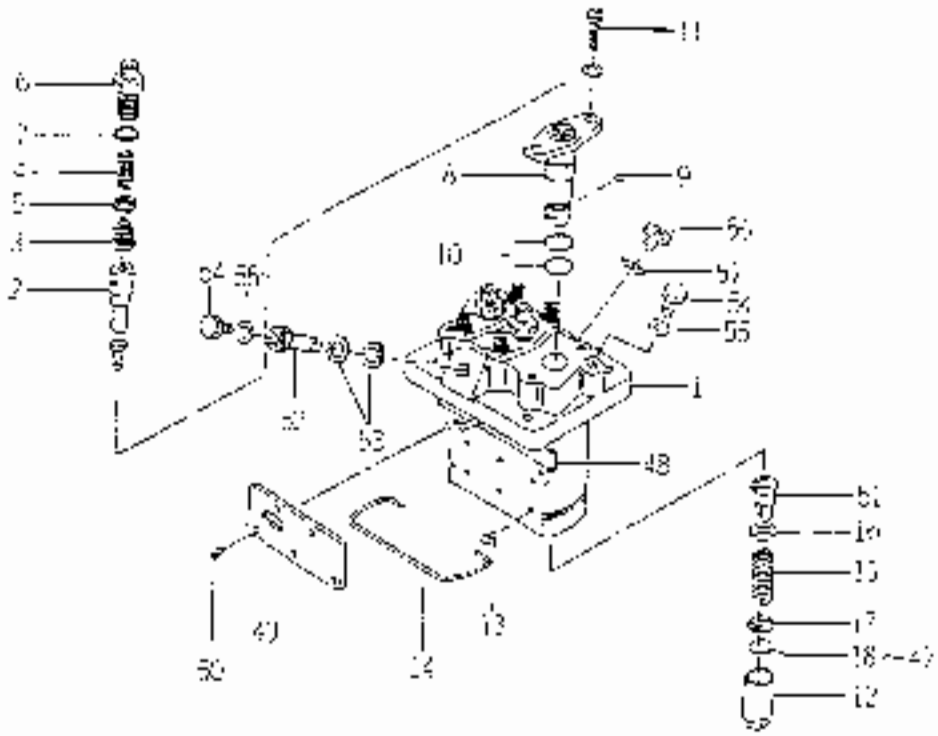

KEY	PART CODE	DESCRIPTION	QTY	TYPE OF MODEL		ITC	COL	GRP	REMARKS
				L39300					
51	6215 – 635 – 008 – 00	CONTROL SLEEVE	3	•					
52	6215 510 030 00	EYEBOLT	1	•					
53	6215 – 619 – 014 – 00	GASKET	2	•					
54	6215 618 015 00	BOLT	2	•					
55	6215 – 610 – 016 – 00	GASKET	2	•					
56	6215 615 026 00	PLUG	1	•					
57	6215 – 610 – 014 – 00	GASKET	1	•					

FIG. 26 COMPONENT PARTS FOR 6281 – 100 – 005 – 00 ON Fig.22

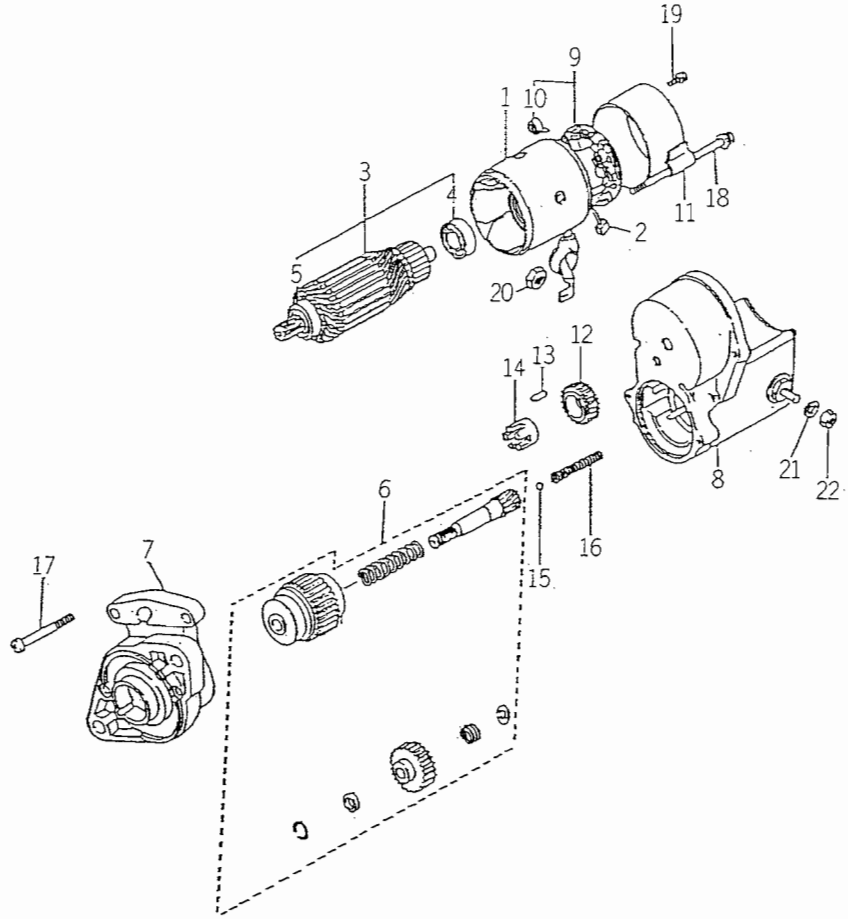

6281-1000

KEY	PART CODE	DESCRIPTION	QTY	TYPE OF MODEL E393G01		ITC	COL	GRP	REMARKS
1	6281 – 111 – 002 – 00	YOKE/STARTER	1	*					
2	6281 – 116 – 002 – 00	STARTER KIT	2	*					
3	6281 – 121 – 003 – 00	ARMATURE	1	*					
4	6281 – 129 – 010 – 00	BEARING,BALL	1	*					
5	6281 – 129 – 011 – 00	BEARING,BALL	1	*					
6	6281 – 124 – 001 – 00	STARTER KIT	1	*					
7	6281 – 129 – 020 – 00	HOUSING,STARTER ASSY	1	*					
8	6281 – 151 – 005 – 00	SWITCH,STARTER ASSY	1	*					
9	6281 – 118 – 002 – 00	HOLDER BRUSH ASSY	1	*					
10	6581 – 117 – 007 – 00	SPRING,BRUSH	4	*					
11	6281 – 115 – 005 – 00	FRAME,STARTER END	1	*					
12	6581 – 123 – 011 – 00	PINION,STARTER	1	*					
13	6581 – 129 – 099 – 00	RORA	5	*					
14	6581 – 129 – 100 – 00	RETAINER	1	*					
15	6581 – 129 – 092 – 00	BALL	1	*					
16	6581 – 129 – 096 – 00	SPRING	1	*					
17	6281 – 129 – 006 – 00	SCREW	2	*					
18	6281 – 129 – 008 – 00	BOLT/WS	2	*					
19	6281 – 129 – 009 – 00	SCREW/WS	2	*					
20	6909 – 111 – 508 – 00	NUT	1	*					
21	6909 – 150 – 508 – 00	WASHER	1	*					
22	6909 – 110 – 408 – 00	NUT/M8	1	*					

FIG. 27 COMPONENT PARTS FOR 6281 – 200 – 005 – 00 ON Fig.22

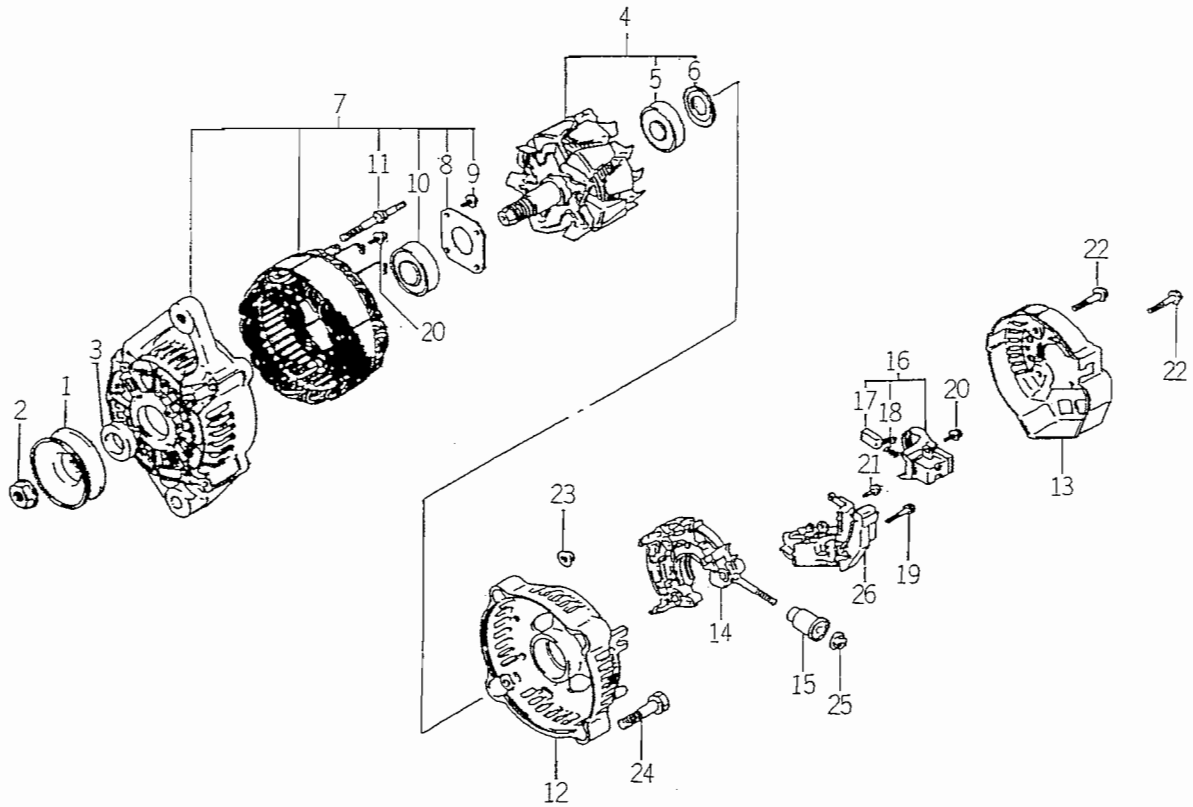

6281-2000

KEY	PART CODE	DESCRIPTION	QTY	TYPE OF MODEL E393G01		ITC	COL	GRP	REMARKS
1	6281 – 222 – 004 – 00	PULLEY	1	*					
2	6281 – 229 – 002 – 00	NUT	1	*					
3	6281 – 229 – 003 – 00	COLLOR	1	*					
4	6281 – 221 – 001 – 00	ROTOR ASSY	1	*					
5	6281 – 229 – 005 – 00	BEARING	1	*					
6	6281 – 229 – 004 – 00	COVER,BEARING	1	*					
7	6281 – 213 – 006 – 00	FRAME ASSY	1	*					
8	6281 – 229 – 006 – 00	PLATE	1	*					
9	6281 – 229 – 007 – 00	BOLT	4	*					
10	6281 – 229 – 009 – 00	BEARING	1	*					
11	6281 – 229 – 008 – 00	BOLT	2	*					
12	6281 – 214 – 003 – 00	FRAME	1	*					
13	6281 – 214 – 004 – 00	COVER	1	*					
14	6281 – 229 – 029 – 00	HOLDER ASSY	1	*					
15	6281 – 229 – 011 – 00	BUSH	1	*					
16	6281 – 217 – 001 – 00	HOLDER,BRUSH ASSY	1	*					
17	6281 – 215 – 001 – 00	BRUSH	2	*					
18	6281 – 216 – 001 – 00	SPRING	2	*					
19	6281 – 229 – 012 – 00	BOLT	2	*					
20	6281 – 229 – 013 – 00	BOLT	6	*					
21	6281 – 229 – 014 – 00	BOLT	1	*					
22	6281 – 229 – 015 – 00	BOLT	3	*					
23	6281 – 229 – 016 – 00	NUT	2	*					
24	6281 – 229 – 017 – 00	BOLT	2	*					
25	6281 – 229 – 018 – 00	NUT	1	*					

FIG. 27 COMPONENT PARTS FOR 6281 – 200 – 005 – 00 ON Fig.22

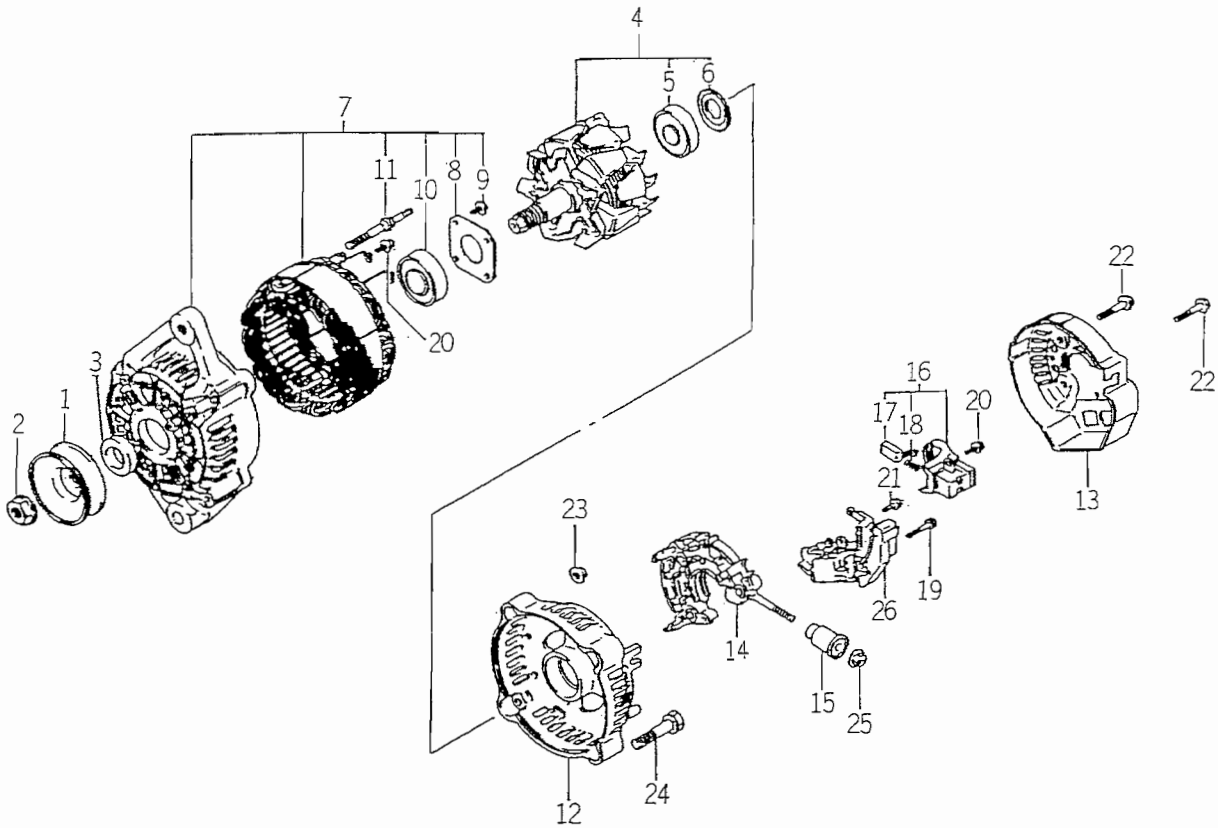

6281-2000

KEY	PART CODE	DESCRIPTION	QTY	TYPE OF MODEL E393G01	TYPE OF MODEL	ITC	COL	GRP	REMARKS
26	6281 – 271 – 002 – 00	REGULATOR ASSY	1	*					

CHASSIS

FIG. 1 RADIATOR SYSTEM

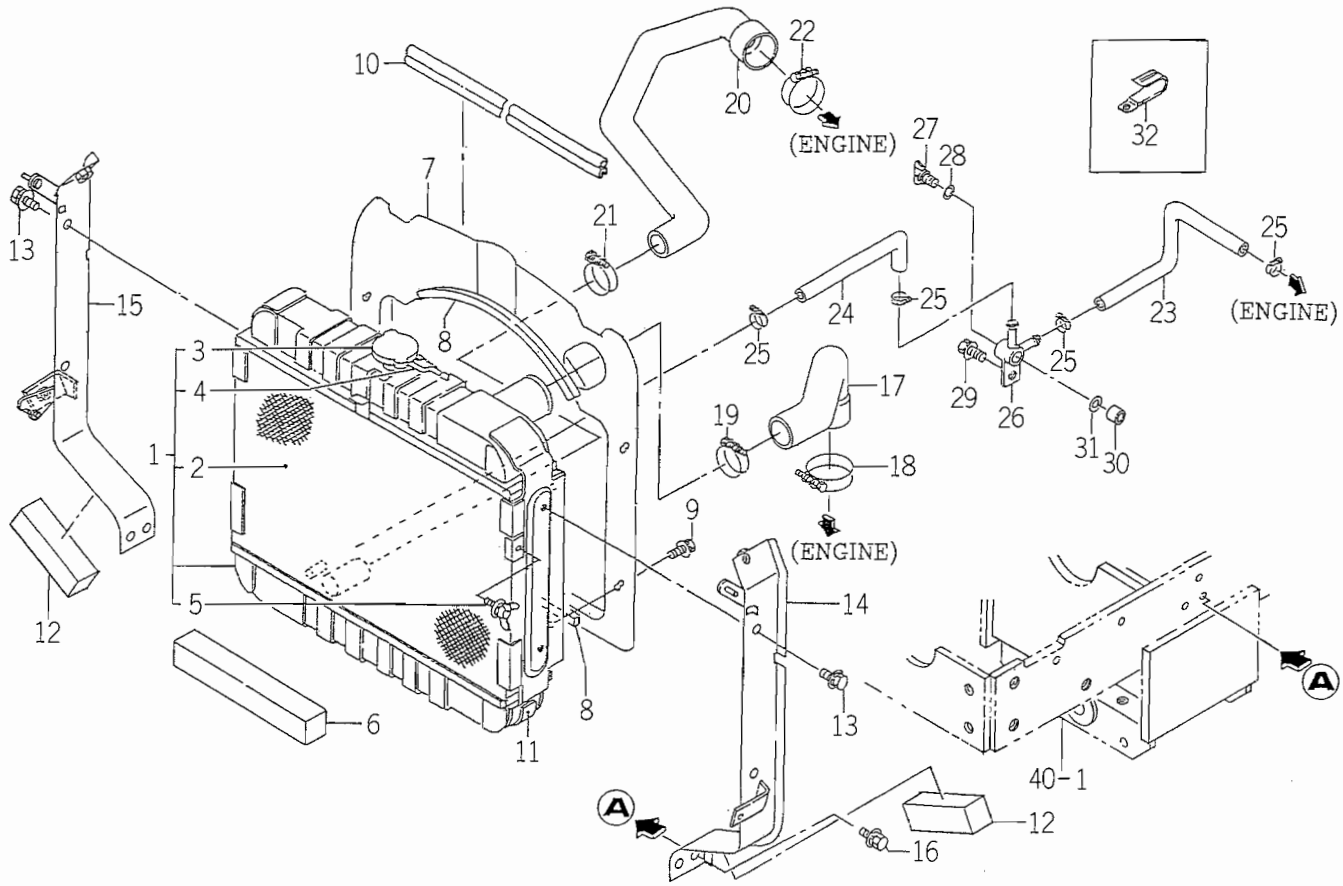

1683-102

KEY	PART CODE	DESCRIPTION	QTY	TYPE OF MODEL TMG18		ITC	COL	GRP	REMARKS
1	1675 - 102 - 200 - 00	RADIATOR ASSY	1	*					
2	1637 - 102 - 202 - 00	NET/WIRE COMP	1	*					
3	1614 - 102 - 213 - 00	CAP	1	*					
4	1614 - 102 - 214 - 00	HOSE	1	*					
5	V273 - 360 - 601 - 20	BOLT/WING/SP	1	*					
6	1682 - 102 - 003 - 00	INSULATOR/15X20X420	1	*					
7	1683 - 102 - 002 - 00	SHROUD	1	*					
8	1675 - 102 - 002 - 00	INSULATOR	2	*					
9	V210 - 360 - 601 - 20	BOLT,SEMS	4	*					
10	1612 - 111 - 001 - 00	INSULATOR	1	*					
11	1612 - 102 - 005 - 00	INSULATOR	1	*					
12	1672 - 102 - 004 - 00	INSULATOR	2	*					
13	V211 - 360 - 801 - 60	BOLT,SEMS (SP)	4	*					
14	1683 - 102 - 200 - 20	PLATE/LH COMP	1	*					
15	1683 - 102 - 210 - 20	PLATE/RH COMP	1	*					
16	V211 - 360 - 801 - 60	BOLT,SEMS (SP)	4	*					
17	1675 - 102 - 004 - 00	HOSE/RADIATOR/INLET	1	*					
18	J061 - 236 - 044 - 00	CLAMP/WIRE/36 - 44	1	*					
19	J061 - 230 - 038 - 00	CLAMP/WIRE/30 - 38	1	*					
20	1675 - 102 - 006 - 00	HOSE/RADIATOR/OUTLET	1	*					
21	J061 - 224 - 032 - 00	CLAMP/WIRE/24 - 32	1	*					
22	J061 - 236 - 044 - 00	CLAMP/WIRE/36 - 44	1	*					
23	1682 - 102 - 004 - 00	HOSE/250	1	*					
24	1593 - 102 - 004 - 20	HOSE/210	1	*					
25	J061 - 210 - 015 - 00	CLAMP/WIRE/10 - 15	4	*					

FIG. 1 RADIATOR SYSTEM

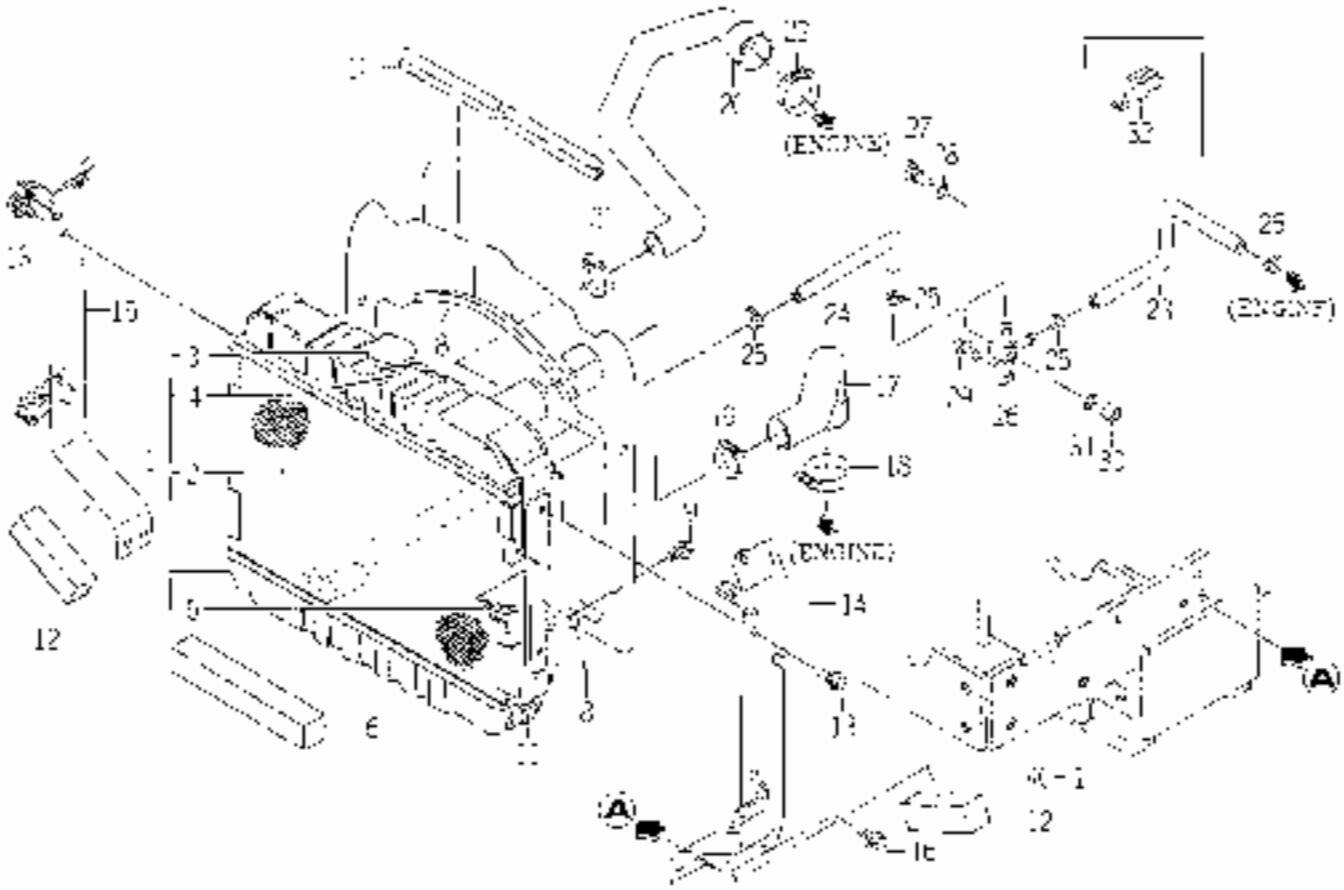

KEY	PART CODE	DESCRIPTION	QTY	TYPE OF MODEL				REMARKS
					TC	CL	NRP	
26	1660 - 104 - 010 - 40	CONNECTOR						
27	1424 - 101 - 205 - 00	PIPE						
28	1474 - 101 - 204 - 00	PACKING						
29	V211 - 350 - 304 - 00	BOLT						
30	1017 - 102 - 006 - 00	HOLD/CLOCK ASSY						
31	V211 - 260 - 006 - 00	WASHER PLAIN						
32	1425 - 021 - 004 - 00	CLAMP MANGO						

FIG. 2 MUFFLER SYSTEM

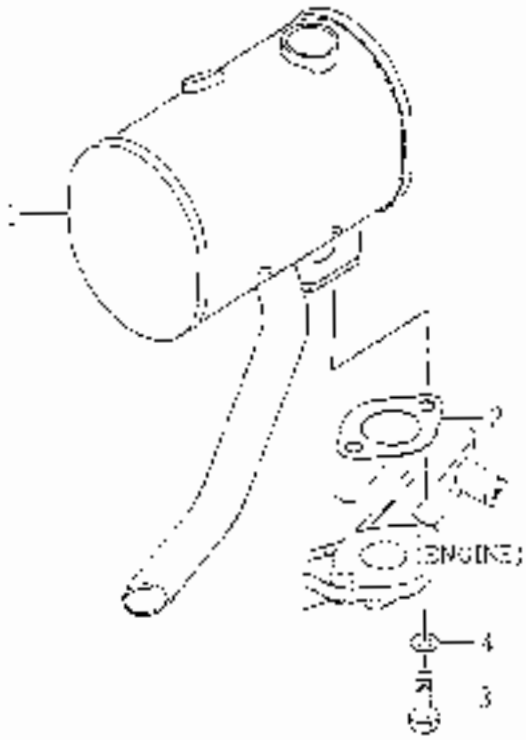

KEY	PART CODE	DESCRIPTION	QTY	TYPE OF MODEL	REMARKS
	1082 [illegible]	MUFFLER ASSY	1		
2	1594 [illegible]	GASKET	[illegible]		
3	V208 [illegible]	BOLT	2		
4	V401 [illegible]	WASHER-S/W [illegible]	2		

FIG. 3 AIR CLEANER SYSTEM

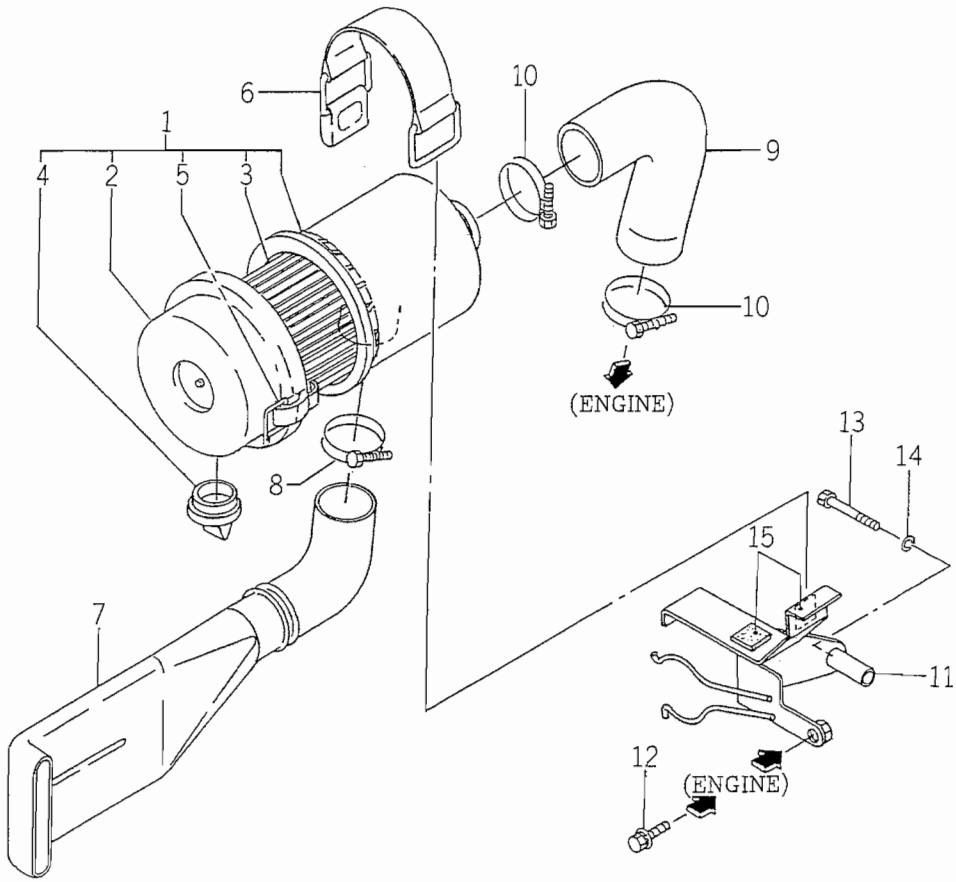

1682-104

KEY	PART CODE	DESCRIPTION	QTY	TYPE OF MODEL TMG18		ITC	COL	GRP	REMARKS
1	1675 - 104 - 210 - 00	CLEANER/AIR ASSY	1	*					
2	1675 - 104 - 211 - 00	COVER ASSY	1	*					
3	1675 - 104 - 213 - 00	ELEMENT ASSY	1	*					
4	1544 - 104 - 205 - 00	VALVE	1	*					
5	1650 - 104 - 201 - 00	CLIP	2	*					
6	1614 - 104 - 001 - 00	BAND/CLEANER	1	*					
7	1682 - 104 - 001 - 00	PIPE/CLEANER/INLET	1	*					
8	J061 - 242 - 050 - 00	CLAMP/WIRE/42 - 50	1	*					
9	1675 - 104 - 002 - 00	HOSE/CLEANER/OUTLET	1	*					
10	J061 - 247 - 055 - 00	CLAMP/WIRE/47 - 55	2	*					
11	1682 - 104 - 200 - 00	BRACKET/CLEANER COMP	1	*					
12	V211 - 360 - 802 - 00	BOLT (SP) M8X20	1	*					
13	V201 - 260 - 808 - 00	BOLT/M 8X80	1	*					
14	V401 - 160 - 008 - 00	WASHER,SP/M 8	1	*					
15	1427 - 111 - 229 - 00	CUSHION,RUBBER	2	*					

FIG. 4 FILTER SYSTEM

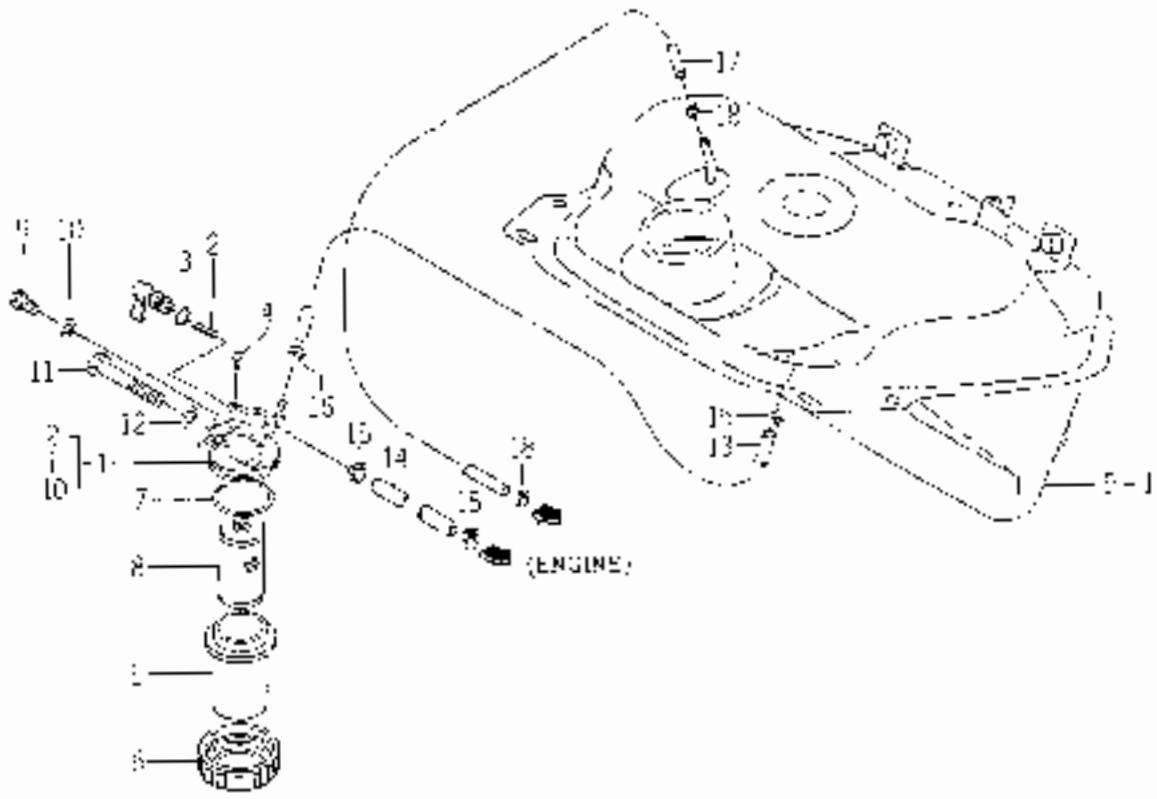

KEY	PART CODE	DESCRIPTION	QTY	TYPE OF MODEL INSTALLED	ITC	COLL	CBP	REMARKS
1	1672 105 - 210 - 00	FILTER/FUEL ASSY	1					
2	1415 - 102 007 - 00	SPHERIC VALVE	1					
3	V720 - 102 - 401 00	O - RING/21DA	1					
4	1415 - 102 005 00	VIS						
5	1415 102 - 009 - 00	CLIP						
6	1444 102 - 204 00	SUTURING						
7	V720 - 103 - 604 - 20	O - RING/144	1					
8	1415 - 102 - 011 - 00	ELEMENT	1					
9	1572 102 - 003 - 00	BOLT/M6X30/ASSY	2					
10	1415 - 102 - 013 00	PACKING	2					
11	V201 200 300 00	BOLT/M 8X63						
12	V401 - 160 006 00	WASHER/SP M 8						
13	1572 105 - 001 - 10	HOSE/06X12X330	1					
14	2503 - 105 002 - 00	HOSE/350	1					
15	J061 213 - 017 - 00	CLAMP/WIRE/12 - 12	7					
16	J002 111 120 00	CLIP/HOSE/11.1 12	2					
17	1572 105 - 002 - 00	HOSE/652						
18	J052 031 007 00	CLIP/HOSE/6.1 37	1					

FIG. 5 FUEL TANK SYSTEM

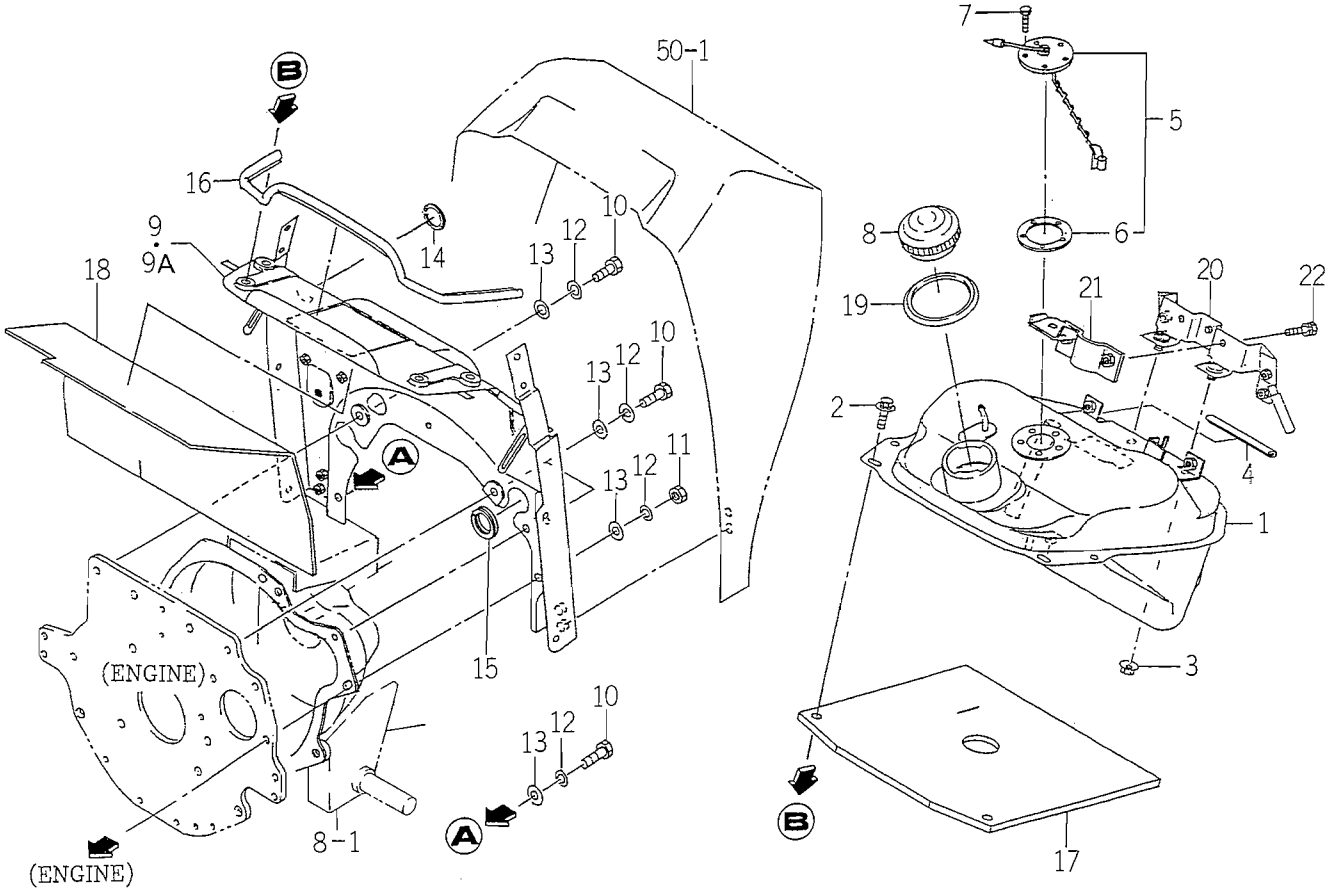

1682-111

KEY	PART CODE	DESCRIPTION	QTY	TYPE OF MODEL TMG18		ITC	COL	GRP	REMARKS
1	1672 - 111 - 200 - 00	TANK/FUEL COMP	1	*					
2	V211 - 360 - 801 - 60	BOLT,SEMS (SP)	2	*					
3	V363 - 260 - 008 - 00	NUT,LOCK/M8	2	*					
4	1672 - 111 - 002 - 00	PAD/120	1	*					
5	1672 - 111 - 210 - 10	GAUGE/FUEL ASSY	1	*					
6	1416 - 621 - 037 - 00	PACKING/RUBBER	1	*					
7	V200 - 260 - 501 - 0B	BOLT/SEAL	5	*					
8	1682 - 111 - 300 - 00	CAP/FUEL ASSY	1	*					
9	1682 - 111 - 210 - 00	BRACKET/TANK COMP	1	1- -200					
9A	1682 - 111 - 210 - 10	BRACKET/TANK COMP	1	201-		1			
10	V203 - 361 - 002 - 00	BOLT/M10X1.25X20	4	*					
11	V334 - 460 - 010 - 00	NUT/M10 7T P=1.25	1	*					
12	V401 - 160 - 010 - 00	WASHER,SP/M10	5	*					
13	V411 - 260 - 010 - 00	WASHER/M10	5	*					
14	1600 - 616 - 006 - 00	INSULATOR/75	1	*					
15	1612 - 690 - 001 - 00	INSULATOR/36	2	*					
16	1612 - 111 - 001 - 00	INSULATOR	1	*					
17	1612 - 111 - 002 - 10	INSULATOR	1	*					
18	1672 - 111 - 001 - 00	INSULATOR/TANK	1	*					
19	1560 - 111 - 003 - 20	COVER	1	*					
20	1612 - 111 - 230 - 10	BRACKET/TANK COMP	1	*					
21	1672 - 111 - 230 - 00	BRACKET/LEVER COMP	1	*					
22	V211 - 260 - 802 - 00	BOLT,SEMS (S)	2	*					

FIG. 6 BATTERY SYSTEM

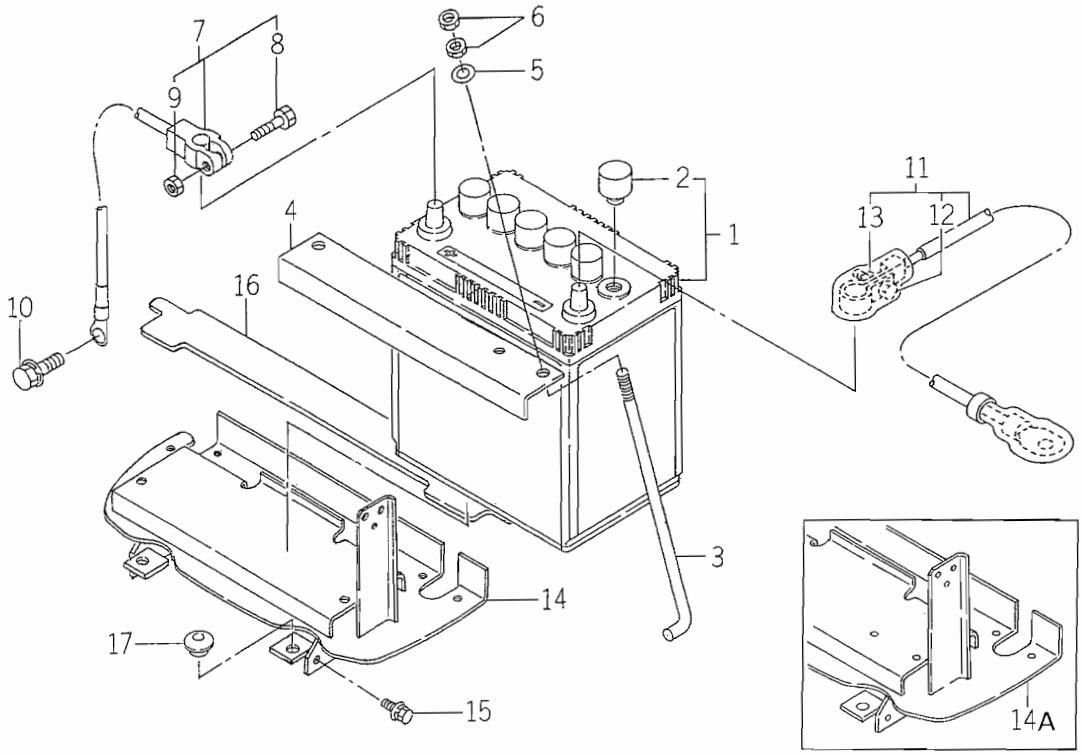

1688-112

KEY	PART CODE	DESCRIPTION	QTY	TYPE OF MODEL TMG18		ITC	COL	GRP	REMARKS
1	1593 - 112 - 200 - 10	BATTERY/38B20L ASSY	1	*					
2	1427 - 621 - 002 - 10	CAP,BATTERY	1	*					
3	1593 - 112 - 002 - 50	BOLT,BATTERY	2	*					
4	1682 - 112 - 006 - 00	PLATE/BATTERY	1	*					
5	V411 - 260 - 006 - 00	WASHER / M6	2	*					
6	V301 - 260 - 006 - 00	NUT/M 6	4	*					
7	1579 - 112 - 230 - 00	CABLE,EARTH	1	*					
8	1600 - 112 - 231 - 00	BOLT/M06X32	1	*					
9	1600 - 112 - 232 - 00	NUT/M06	1	*					
10	V211 - 360 - 801 - 60	BOLT,SEMS (SP)	1	*					
11	1672 - 112 - 220 - 20	CABLE/BATTERY ASSY	1	*					
12	1560 - 666 - 005 - 00	BOLT	1	*					
13	1560 - 666 - 006 - 00	NUT	1	*					
14	1683 - 112 - 200 - 20	BASE/BATTERY COMP	1	1--169					
14A	1683 - 112 - 200 - 30	BASE/BATTERY COMP	1	170-		1			
15	V211 - 360 - 801 - 60	BOLT,SEMS (SP)	8	*					
16	1682 - 112 - 001 - 00	INSULATOR	1	*					
17	1421 - 603 - 004 - 00	BUSH,LEVER	2	*					

FIG. 7 ACCELERATOR SYSTEM

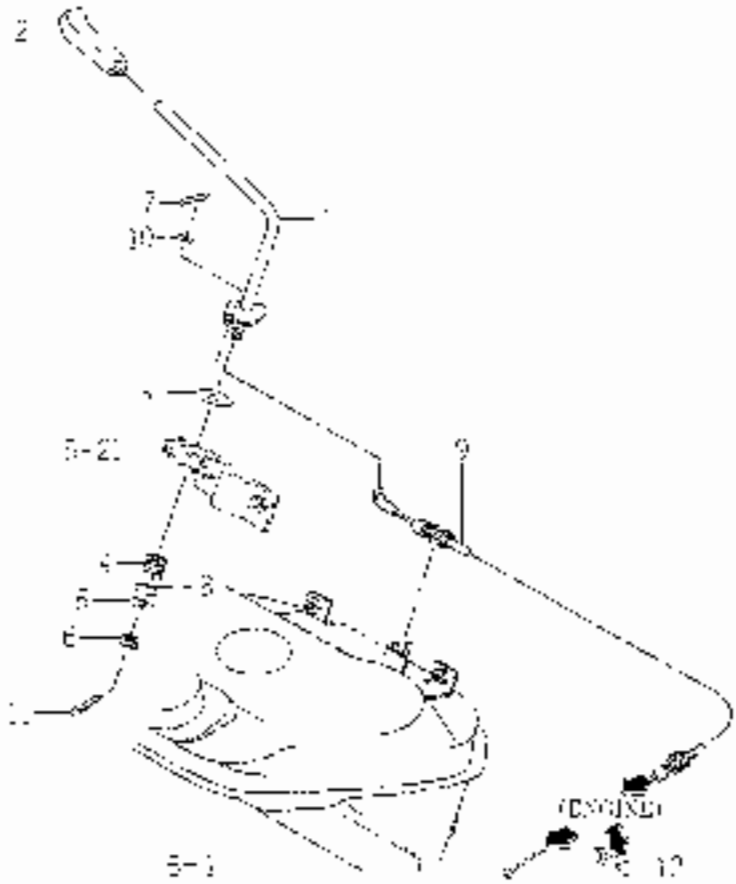

KEY	PART CODE	DESCRIPTION	QTY	TYPE OF MODEL			COL	GRIP	REMARKS
				TWIN		C			
1	1317 - 117 - 200 - 20	LEVER 20MP	1						
2	1314 - 117 - 001 - 00	GRIP/THROTTLE	1						
3	1500 117 002 00	PIPING/THROTTLE	1						
4	1404 - 117 - 008 - 00	SPRING/THROTTLE/22	1						
5	V411 200 - 010 - 00	WASHER/M10	1						
6	V223 - 252 - 110 - 00	NUT	1						
7	V500 152 502 00	PINSPLIT/2.5X25							
8	3510 - 440 - 010 - 00	WASHER							
9	1575 - 117 - 210 - 10	CABLE/ACCELERATOR							
10	V411 250 006 00	WASHER M8	2						
11	V500 152 501 00	PINSPLIT/2.5X15	2						
12	1575 116 001 00	HOLDER							

FIG. 8 CLUTCH SYSTEM (EXCEPT S TYPE)

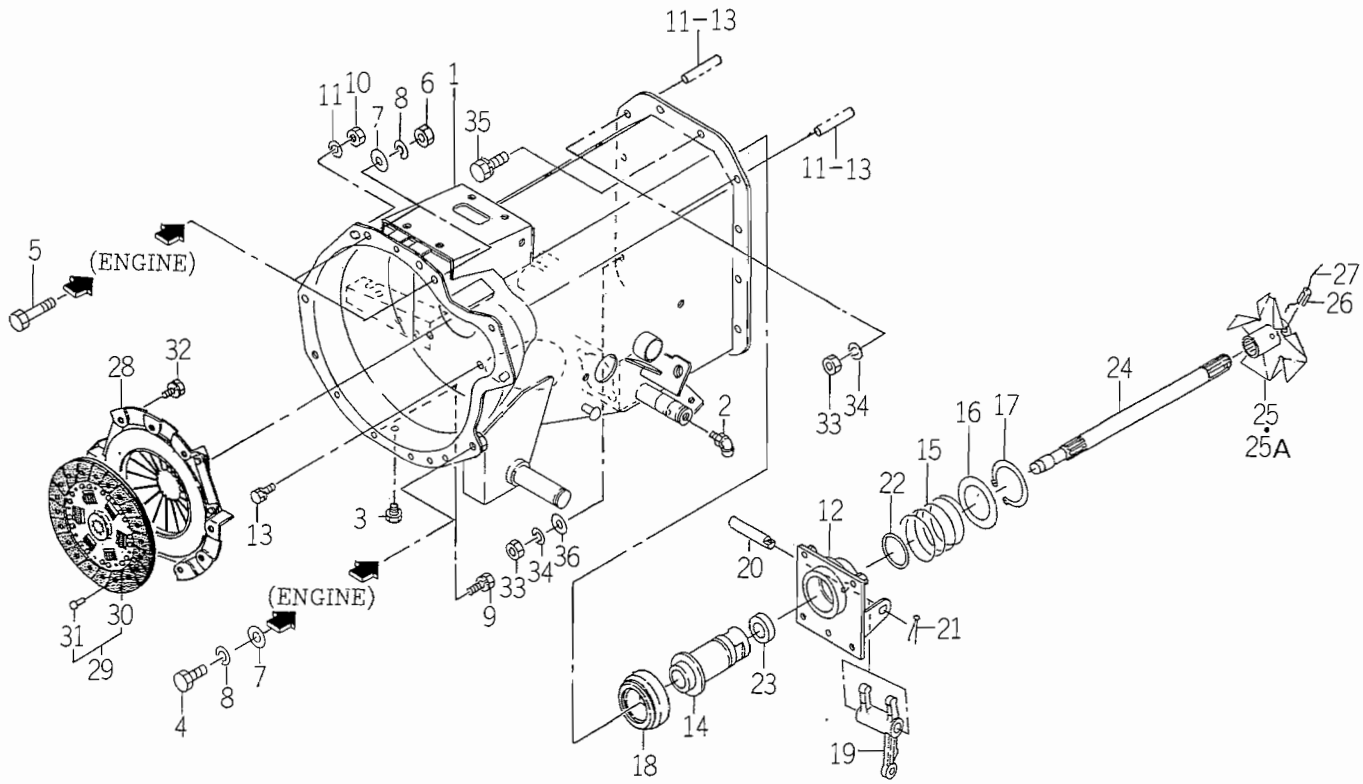

1683-120

KEY	PART CODE	DESCRIPTION	QTY	TYPE OF MODEL TMG18		ITC	COL	GRP	REMARKS
1	1683 - 120 - 500 - 10	HOUSING/CLUTCH COMP	1	*					
2	V761 - 150 - 000 - 00	NIPPLE/GREASE	1	*					
3	1326 - 706 - 002 - 10	PLUG,DRAIN	1	*					
4	V201 - 361 - 202 - 50	BOLT/M12X25	2	*					
5	V201 - 361 - 204 - 00	BOLT/M12X40	2	*					
6	V304 - 460 - 012 - 00	NUT/M12	2	*					
7	V411 - 260 - 012 - 00	WASHER /M12	4	*					
8	V401 - 160 - 012 - 00	WASHER,SP/M12	4	*					
9	V211 - 260 - 801 - 60	BOLT,SEMS (S) M8X16	4	*					
10	V334 - 460 - 010 - 00	NUT/M10 7T P=1.25	2	*					
11	V401 - 160 - 010 - 00	WASHER,SP/M10	2	*					
12	1672 - 120 - 220 - 00	HOLDER/SLEEVE COMP	1	*					
13	V211 - 260 - 801 - 60	BOLT,SEMS (S) M8X16	4	*					
14	1672 - 120 - 002 - 10	SLEEVE	1	*					
15	1672 - 120 - 003 - 00	SPRING/HC64	1	*					
16	1672 - 120 - 004 - 00	WASHER/46X70X2	1	*					
17	V706 - 140 - 045 - 00	RING/SNAP	1	*					
18	1491 - 120 - 001 - 00	BEARING,CLUTCH RS	1	*					
19	1435 - 122 - 002 - 00	FORK/RELEASE	1	*					
20	1672 - 120 - 006 - 00	PIN/12X75	1	*					
21	V500 - 163 - 002 - 00	PIN,SPLIT/3 X20	1	*					
22	V721 - 103 - 104 - 50	O - RING/G45	1	*					
23	V744 - 120 - 350 - 70	SEAL,OIL/TC20357	1	*					
24	1683 - 120 - 051 - 00	SHAFT/INPUT	1	*					
25	1683 - 120 - 530 - 10	FAN/HST COMP	1	1-115					

FIG. 8 CLUTCH SYSTEM (EXCEPT S TYPE)

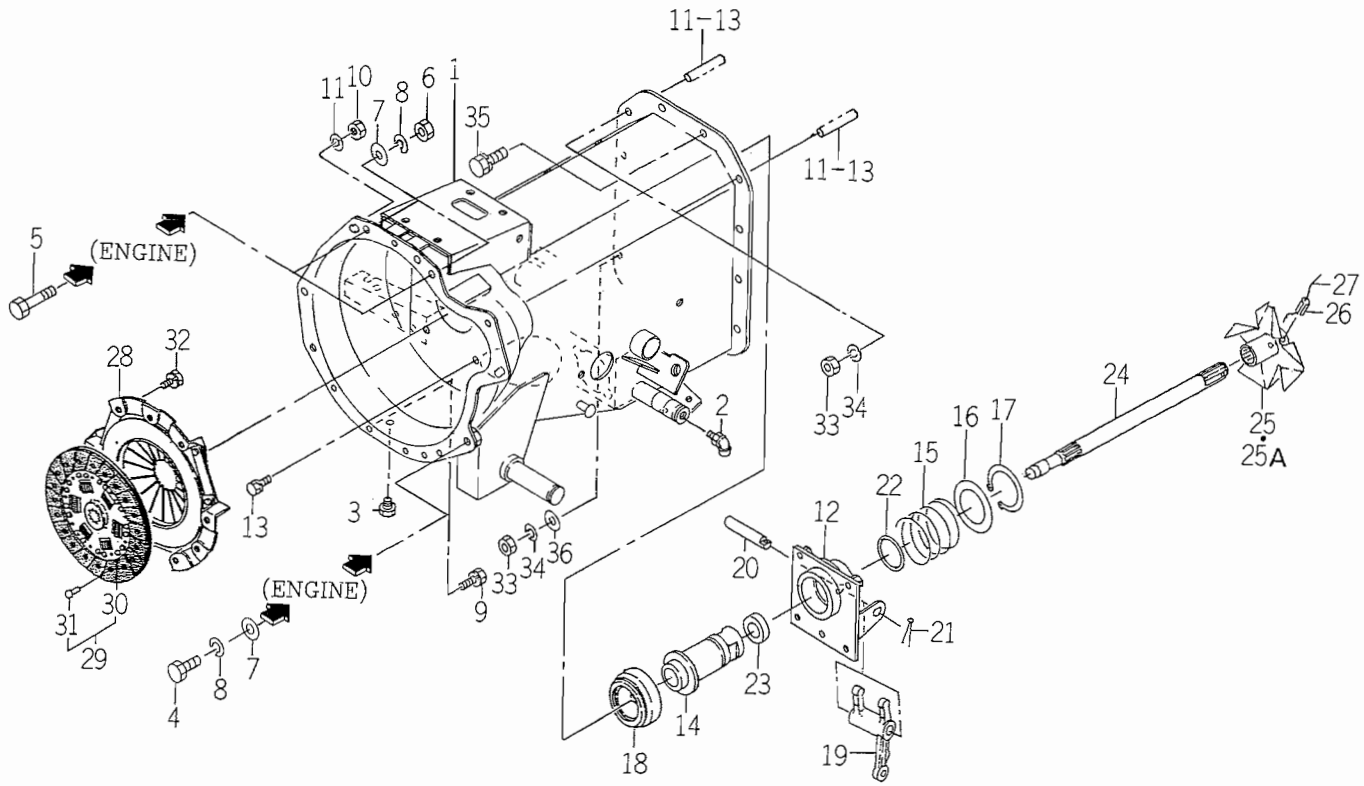

1683-120

KEY	PART CODE	DESCRIPTION	QTY	TYPE OF MODEL TMG18		ITC	COL	GRP	REMARKS
25A	1683 - 120 - 530 - 20	FAN/HST COMP	1	116-		2			
26	V580 - 140 - 603 - 20	PIN,SPRING/6 X32 W	2	*					
27		WIRE	2	*					
28	1600 - 120 - 230 - 00	CLUTCH ASSY	1	*					
29	1600 - 120 - 220 - 00	DISK,CLUTCH/184 COMP	1	*					
30	1600 - 120 - 222 - 00	FACING	2	*					
31	1561 - 121 - 212 - 40	RIVET	18	*					
32	V211 - 260 - 802 - 00	BOLT,SEMS (S)	6	*					
33	V304 - 460 - 010 - 00	NUT/M10	3	*					
34	V401 - 160 - 010 - 00	WASHER,SP/M10	3	*					
35	V211 - 561 - 003 - 50	BOLT/S	10	*					
36	V411 - 260 - 010 - 00	WASHER/M10	1	*					

FIG. 9 CLUTCH SYSTEM (S TYPE)

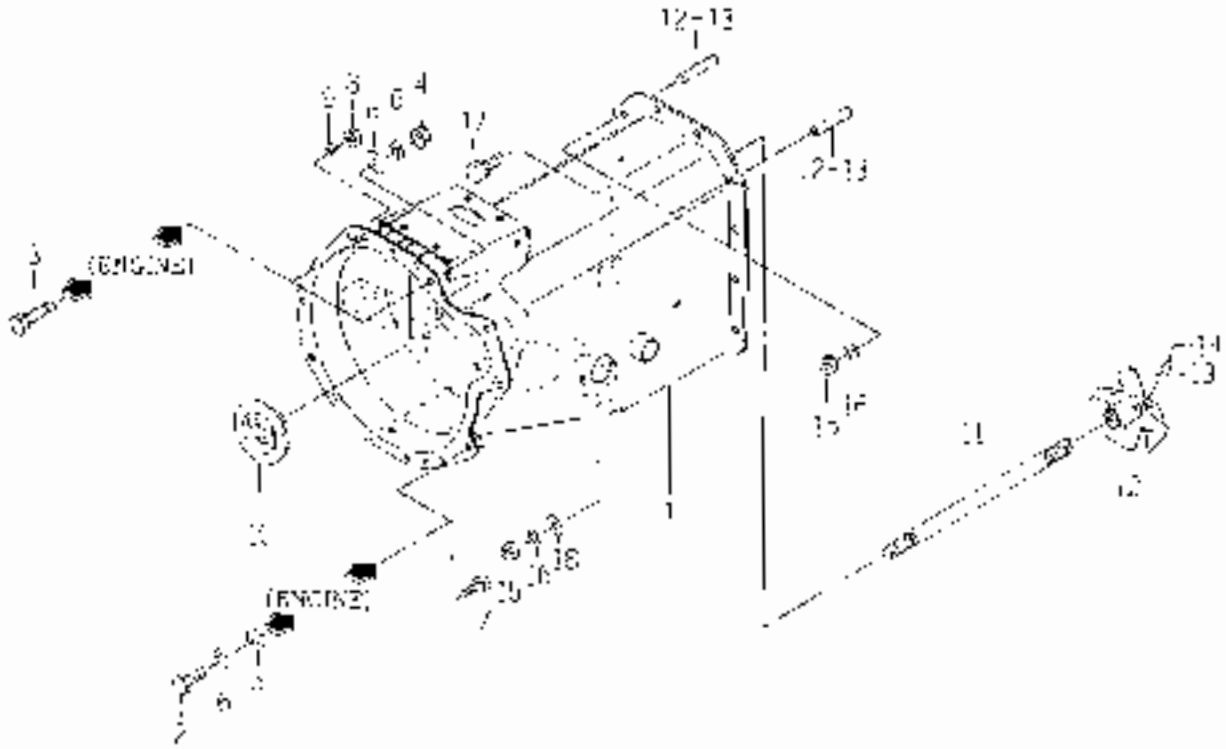

KEY	PART CODE	DESCRIPTION	QTY	TYPE OF MODEL TN3R		I/2	COL	GRF	REMARKS
1	1088 - 120 - 000 10	HOUSING/CLUTCH COMP	1						
2	V201 - 361 - 202 - 60	BOLT M12X25	2						
3	V201 - 361 - 204 - 00	BOLT/M12X40	2						
4	V304 - 450 - 012 - 00	NUT/M12	2						
5	V411 - 260 - 012 - 00	WASHER/M12	2						
6	V401 - 160 - 012 - 00	WASHER,SP/M12	4						
7	V211 - 260 - 801 - 60	BOLT,SPM5 (S) M8X 8	4						
8	V304 - 400 - 010 - 00	NUT/V10 / P=1.25	2						
9	V401 - 160 - 010 - 00	WASHER,SP/M10	2						
10	1688 - 120 - 052 - 00	GRUMMET/25X20X03	1						
11	1688 - 120 - 031 - 00	SHAFT INPUT	1						
12	1688 - 120 - 020 - 20	FAN/PST 0MM	1						
13	V500 - 140 - 003 - 20	PINSPRING 6 X34 W	2						
14		WIRE	2						
15	V304 - 450 - 010 - 00	NUT/M10	3						
16	V401 - 160 - 010 - 00	WASHER,SP/M10	3						
17	V211 - 561 - 005 - 50	BOLT/8	10						
18	V411 - 260 - 010 - 00	WASHER/M10	1						

FIG. 10 CLUTCH PEDAL SYSTEM (EXCEPT S TYPE)

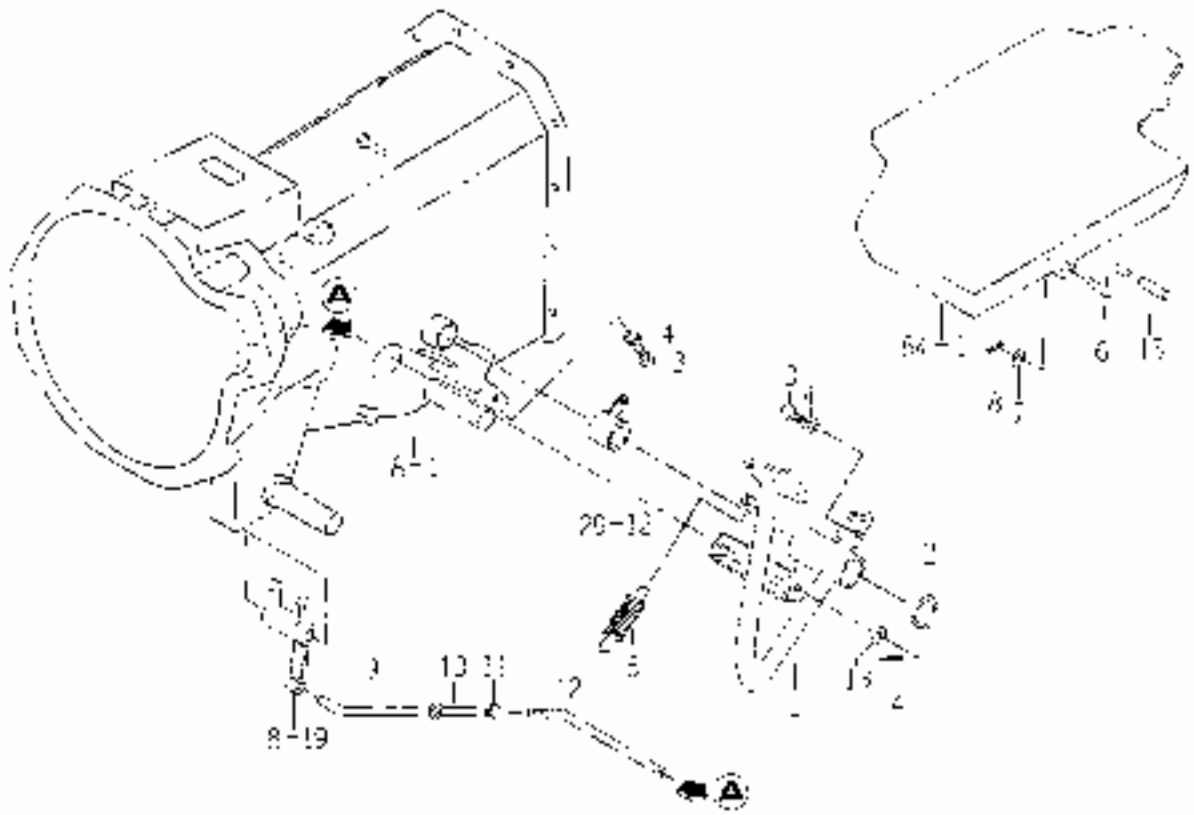

KEY	PART CODE	DESCRIPTION	QTY	TYPE OF MODEL					REMARKS
				TYPE B					
1	16B3 - 177 - 500 - 20	PEDAL CLUTCH COMP	1	1					
2	V704 - 140 - 022 - 00	RING,SNAP, 22 C	1	1					
3	V701 - 260 - 002 - 50	BOLT M 8X25	2	1					
4	V307 - 200 - 006 - 00	NUT/M 8	2	1					
5	1105 - 106 - 001 - 00	WASHING/4.1X4	1	1					
6	1544 - 173 - 005 - 00	ROD	1	1					
7	V411 - 200 - 006 - 00	WASHER / NB	1	1					
8	V500 - 152 - 002 - 00	PIN,SPLIT/2 X20	1	1					
9	1434 - 172 - 007 - 00	ROD,CLUTCH (A)	1	1					
10	1421 - 122 - 003 - 00	SPRING,COIL	1	1					
11	V304 - 200 - 008 - 00	NUT/M 6	1	1					
12	1503 - 172 - 051 - 20	ROD/CLUTCH/2	1	1					
13	V411 - 200 - 008 - 00	WASHER,PL/M 8	2	1					
14	V500 - 160 - 001 - 50	PIN,SPLIT/3 X15	2	1					
15	1072 - 122 - 001 - 00	TUBE/OIL	1	1					

FIG. 11 TRANSMISSION CASE SYSTEM (EXCEPT S TYPE)

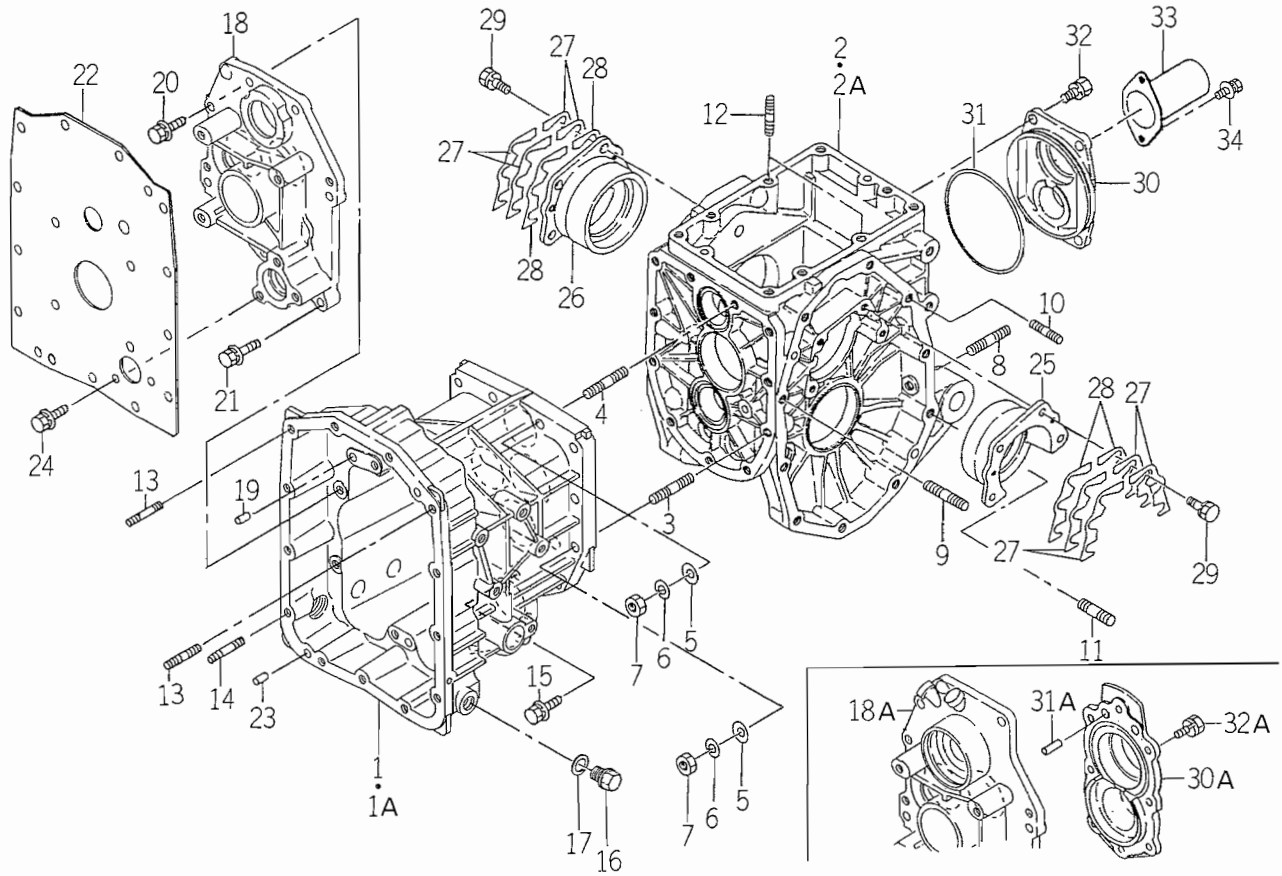

1683-201

KEY	PART CODE	DESCRIPTION	QTY	TYPE OF MODEL TMG18		ITC	COL	GRP	REMARKS
1	1683 - 201 - 051 - 00	CASE/TRANSMISSION/HS	1	1- -200					
1A	1683 - 201 - 051 - 10	CASE/TRANSMISSION/HS	1	201-		3			
2	1427 - 201 - 002 - 50	CASE/TRANSMISSION/RE	1	1- -200					
2A	1688 - 201 - 055 - 00	CASE/TRANSMISSION/RE	1	201-					
3	V252 - 341 - 003 - 50	BOLT/M10X35	8	*					
4	V251 - 341 - 003 - 5D	BOLT/STUD/SEAL	2	*					
5	V411 - 260 - 010 - 00	WASHER/M10	10	*					
6	V401 - 160 - 010 - 00	WASHER,SP/M10	10	*					
7	V304 - 260 - 010 - 00	NUT	10	*					
8	V251 - 261 - 202 - 5D	BOLT/STUD/SEAL	2	*					
9	V252 - 261 - 004 - 00	BOLT/STUD	2	*					
10	V252 - 261 - 005 - 50	BOLT/M10X55	2	*					
11	V252 - 341 - 204 - 50	BOLT/STUD	2	*					
12	V252 - 341 - 003 - 00	BOLT/STUD	2	*					
13	V252 - 341 - 002 - 00	BOLT/STUD	2	*					
14	V251 - 341 - 002 - 50	BOLT/STUD	1	*					
15	V211 - 661 - 005 - 00	BOLT/SP	1	*					
16	1427 - 201 - 007 - 00	PLUG,DRAIN	1	*					
17	1427 - 201 - 008 - 00	WASHER,SEAL/16	1	*					
18	1683 - 201 - 052 - 10	METAL/HST	1	1- -200					
18A	1683 - 201 - 052 - 20	METAL/HST	1	201-		3			
19	V523 - 101 - 002 - 40	PIN	2	*					
20	V211 - 661 - 003 - 50	BOLT/SP	6	*					
21	V211 - 661 - 004 - 00	BOLT/SP	1	*					
22	1683 - 201 - 053 - 10	PLATE/COVER	1	*					

FIG. 11 TRANSMISSION CASE SYSTEM (EXCEPT S TYPE)

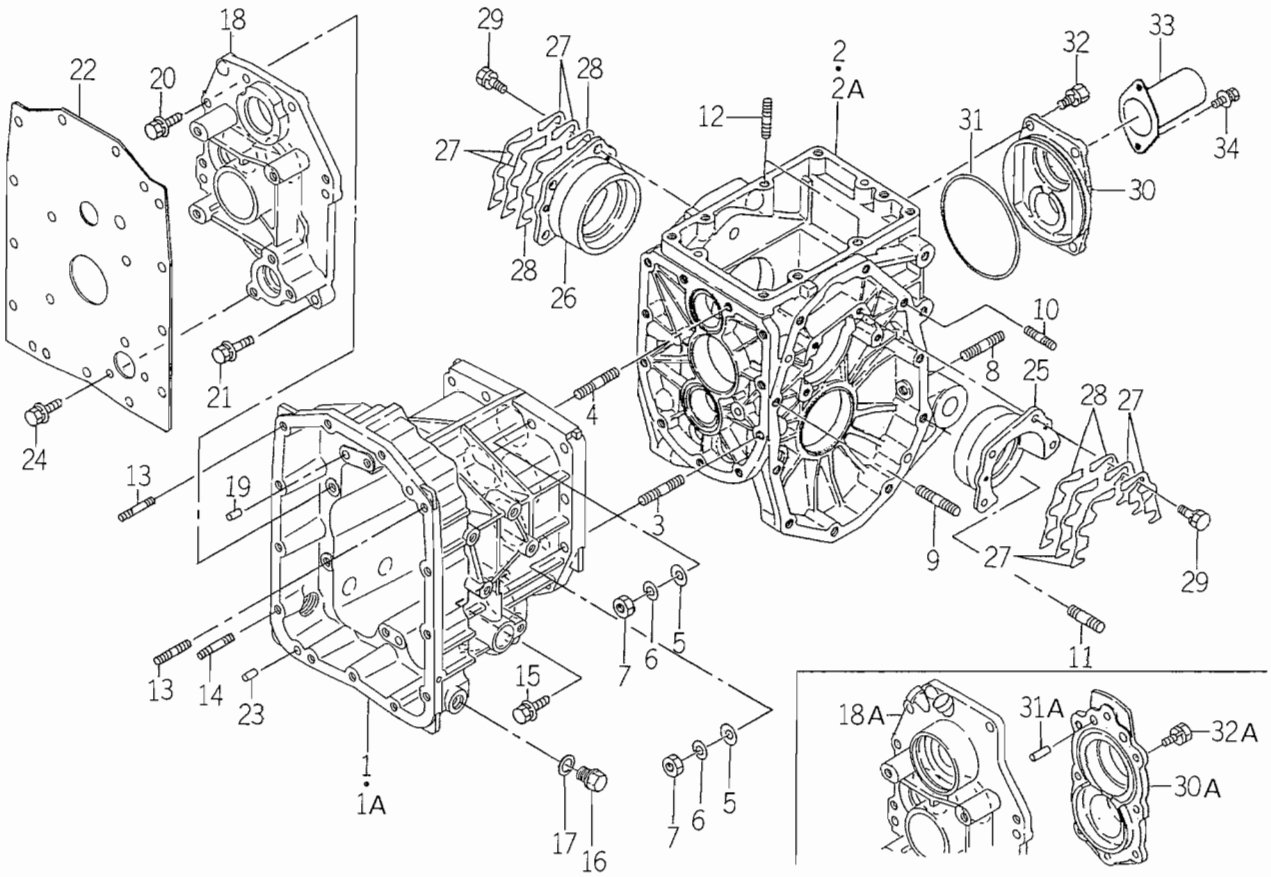

1683-201

KEY	PART CODE	DESCRIPTION	QTY	TYPE OF MODEL TMG18		ITC	COL	GRP	REMARKS
23	1421 - 433 - 004 - 00	PIN,KNOCK	2	*					
24	V211 - 660 - 802 - 00	BOLT/8X20	2	*					
25	1427 - 201 - 012 - 00	METAL,DIFF - CASE LH	1	*					
26	1427 - 201 - 013 - 00	METAL,DIFF - CASE RH	1	*					
27	1427 - 201 - 014 - 00	SHIM,DIFF - CASE A	8	*					
28	1427 - 201 - 015 - 00	SHIM,DIFF - CASE B	4	*					
29	V211 - 560 - 802 - 50	BOLT,SEMS/M8X25 7T	8	*					
30	1672 - 201 - 003 - 00	METAL/PTO	1	1--200					
30A	1688 - 201 - 056 - 00	METAL/PTO	1	201-					
31	1612 - 201 - 002 - 00	SEAL/RING	1	1--200					
31A	V523 - 101 - 002 - 40	PIN	2	201-					
32	V211 - 261 - 003 - 00	BOLT (S) M10X30	4	1--200					
32A	V211 - 260 - 803 - 00	BOLT,SEMS	8	201-					
33	1444 - 314 - 009 - 10	CAP,PTO SHAFT	1	*					
34	V210 - 360 - 602 - 00	BOLT/SP	2	*					

FIG. 12 TRANSMISSION CASE SYSTEM (S TYPE)

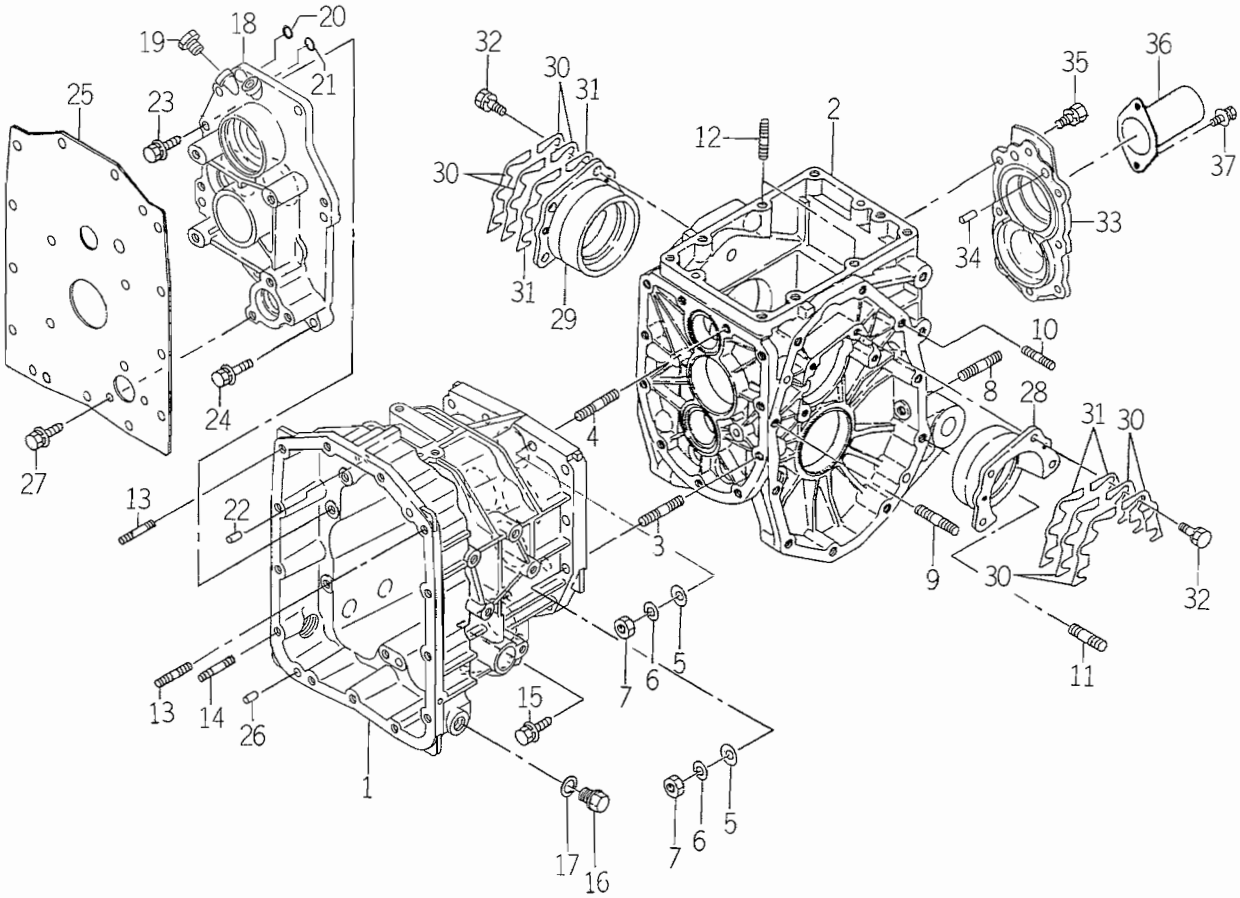

1688-201

KEY	PART CODE	DESCRIPTION	QTY	TYPE OF MODEL TMG18		ITC	COL	GRP	REMARKS
1	1688 - 201 - 051 - 10	CASE/TRANSMISSION/HS	1	*		1			
2	1688 - 201 - 055 - 00	CASE/TRANSMISSION/RE	1	*					
3	V252 - 341 - 003 - 50	BOLT/M10X35	8	*					
4	V251 - 341 - 003 - 5D	BOLT/STUD/SEAL	2	*					
5	V411 - 260 - 010 - 00	WASHER/M10	10	*					
6	V401 - 160 - 010 - 00	WASHER,SP/M10	10	*					
7	V304 - 260 - 010 - 00	NUT	10	*					
8	V251 - 261 - 202 - 5D	BOLT/STUD/SEAL	2	*					
9	V252 - 261 - 004 - 00	BOLT/STUD	2	*					
10	V252 - 261 - 005 - 50	BOLT/M10X55	2	*					
11	V252 - 341 - 204 - 50	BOLT/STUD	2	*					
12	V252 - 341 - 003 - 00	BOLT/STUD	2	*					
13	V252 - 341 - 002 - 00	BOLT/STUD	2	*					
14	V251 - 341 - 002 - 50	BOLT/STUD	1	*					
15	V211 - 661 - 005 - 00	BOLT/SP	1	*					
16	1427 - 201 - 007 - 00	PLUG,DRAIN	1	*					
17	1427 - 201 - 008 - 00	WASHER,SEAL/16	1	*					
18	1688 - 201 - 052 - 00	METAL/HST	1	*					
19	1326 - 706 - 002 - 10	PLUG,DRAIN	2	*					
20	V720 - 101 - 900 - 70	O - RING/P 7	1	*					
21	V720 - 101 - 900 - 50	O - RING/P 5	1	*					
22	V523 - 101 - 002 - 40	PIN	2	*					
23	V211 - 661 - 003 - 50	BOLT/SP	6	*					
24	V211 - 661 - 004 - 00	BOLT/SP	1	*					
25	1683 - 201 - 053 - 10	PLATE/COVER	1	*					

FIG. 12 TRANSMISSION CASE SYSTEM (S TYPE)

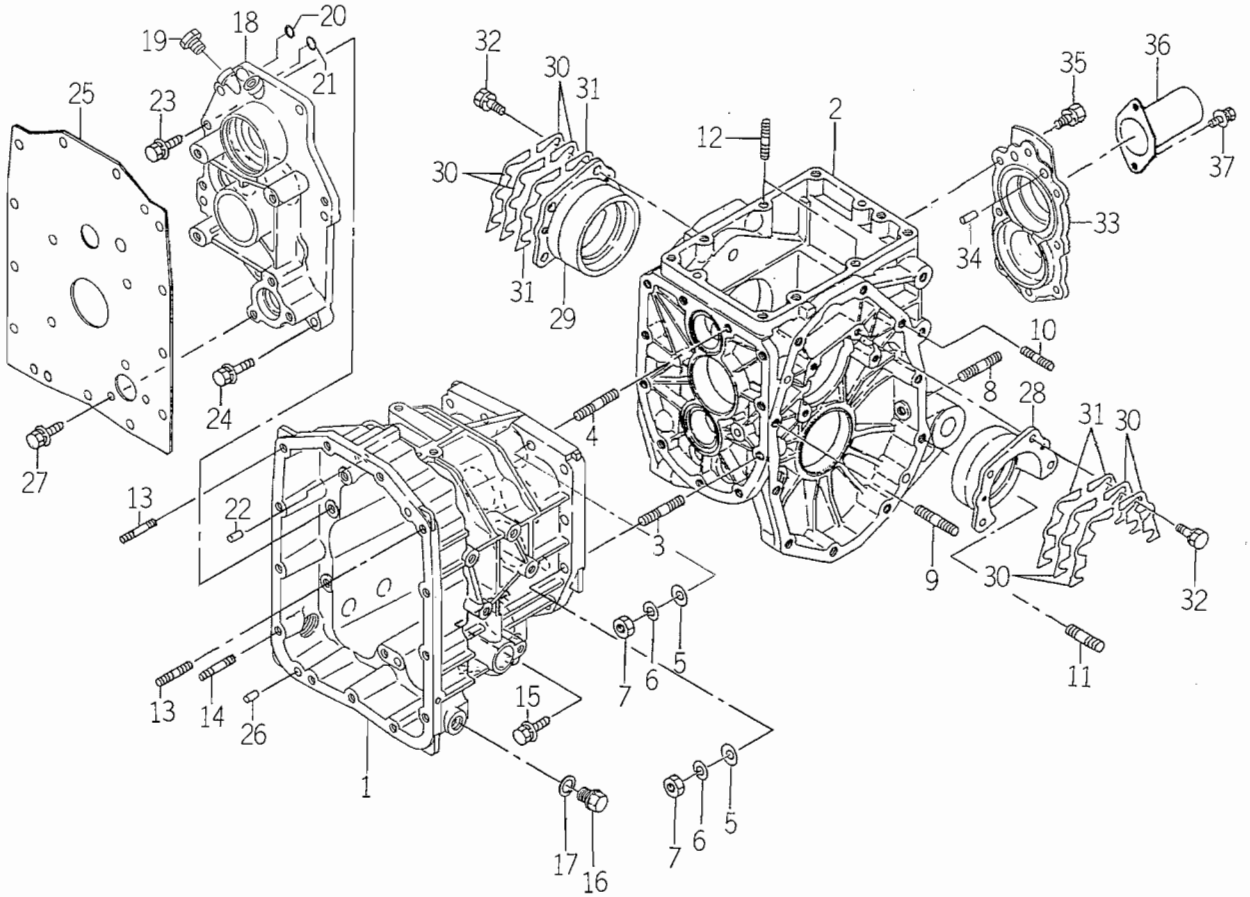

1688-201

KEY	PART CODE	DESCRIPTION	QTY	TYPE OF MODEL TMG18		ITC	COL	GRP	REMARKS
26	1421 - 433 - 004 - 00	PIN,KNOCK	2	*					
27	V211 - 660 - 802 - 00	BOLT/8X20	2	*					
28	1427 - 201 - 012 - 00	METAL,DIFF - CASE LH	1	*					
29	1427 - 201 - 013 - 00	METAL,DIFF - CASE RH	1	*					
30	1427 - 201 - 014 - 00	SHIM,DIFF - CASE A	8	*					
31	1427 - 201 - 015 - 00	SHIM,DIFF - CASE B	4	*					
32	V211 - 560 - 802 - 50	BOLT,SEMS/M8X25 7T	8	*					
33	1688 - 201 - 056 - 00	METAL/PTO	1	*					
34	V523 - 101 - 002 - 40	PIN	2	*					
35	V211 - 260 - 803 - 00	BOLT,SEMS	8	*					
36	1444 - 314 - 009 - 10	CAP,PTO SHAFT	1	*					
37	V210 - 360 - 602 - 00	BOLT/SP	2	*					

FIG. 13 HST SYSTEM

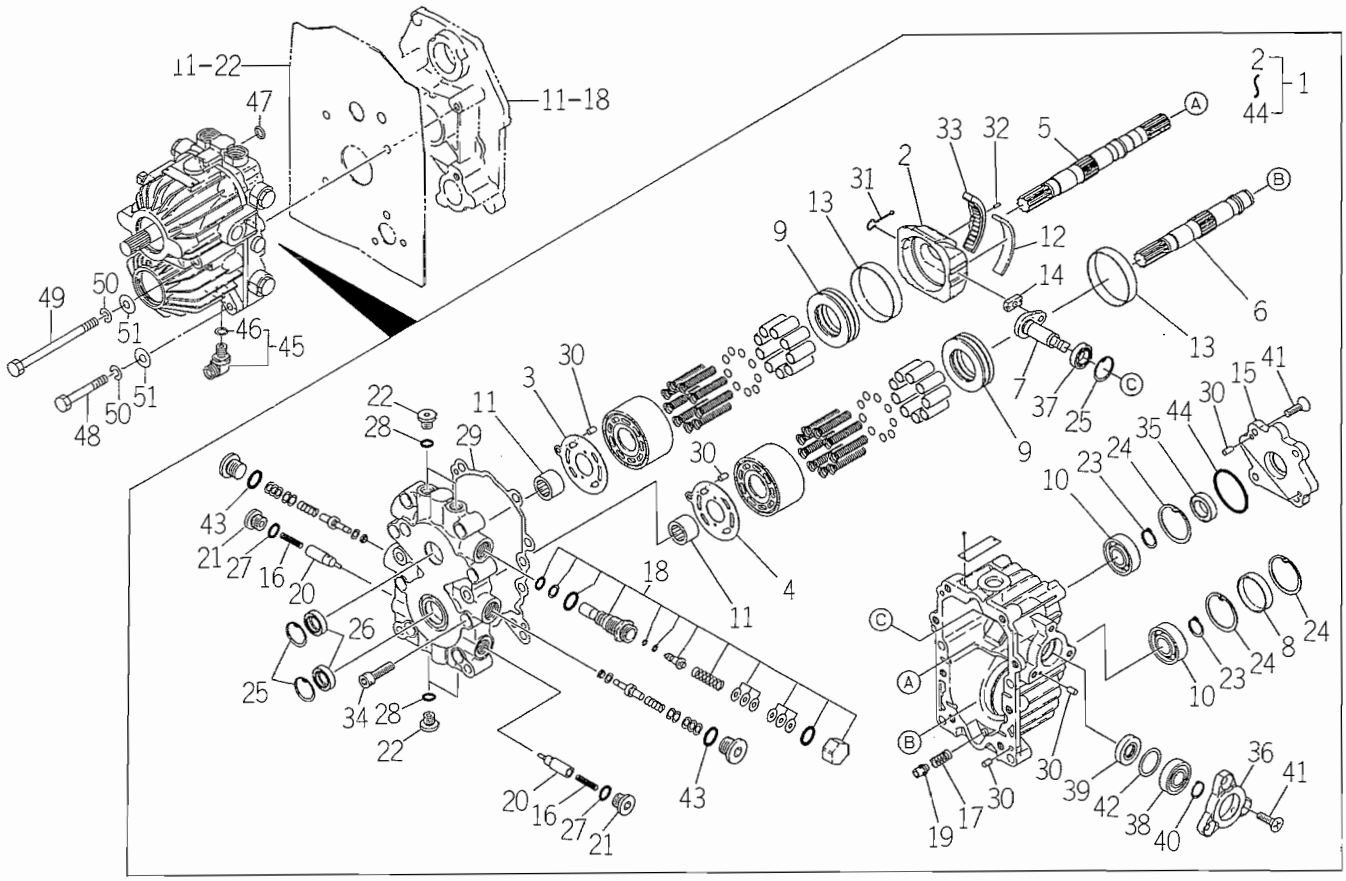

1683-202

KEY	PART CODE	DESCRIPTION	QTY	TYPE OF MODEL TMG18		ITC	COL	GRP	REMARKS
1	1683 - 202 - 500 - 00	HST ASSY	1	*					
2	1683 - 202 - 501 - 00	PLATE/SWASH	1	*					
3	1683 - 202 - 502 - 00	PLATE/VALVE	1	*					
4	1683 - 202 - 503 - 00	PLATE/VALVE	1	*					
5	1683 - 202 - 504 - 00	SHAFT/P	1	*					
6	1683 - 202 - 505 - 00	SHAFT/M	1	*					
7	1683 - 202 - 506 - 00	SHAFT/TRUNNION	1	*					
8	1683 - 202 - 507 - 00	PLUG/BOA	1	*					
9	1683 - 202 - 508 - 00	BEARING/THRUST	2	*					
10	1683 - 202 - 509 - 00	BEARING/BALL	2	*					
11	1683 - 202 - 511 - 00	BEARING/NEEDLE	2	*					
12	1683 - 202 - 512 - 00	BUSH	1	*					
13	1683 - 202 - 513 - 00	BUSH	2	*					
14	1683 - 202 - 514 - 00	METAL/SLIDE	1	*					
15	1683 - 202 - 515 - 00	COVER	1	*					
16	1683 - 202 - 516 - 00	SPRING	2	*					
17	1683 - 202 - 517 - 00	SPRING	1	*					
18	1683 - 202 - 518 - 00	VALVE/S/A	1	*					
19	1683 - 202 - 519 - 00	VALVE/S/A	1	*					
20	1683 - 202 - 521 - 00	POPPET	2	*					
21	1683 - 202 - 522 - 00	PLUG	2	*					
22	1683 - 202 - 523 - 00	PLUG	4	*					
23	V704 - 140 - 020 - 00	RING,SNAP/20C	2	*					
24	V705 - 140 - 047 - 00	RING,SNAP/47 C	3	*					
25	V705 - 140 - 030 - 00	RING,SNAP/30 C	3	*					

FIG. 13 HST SYSTEM

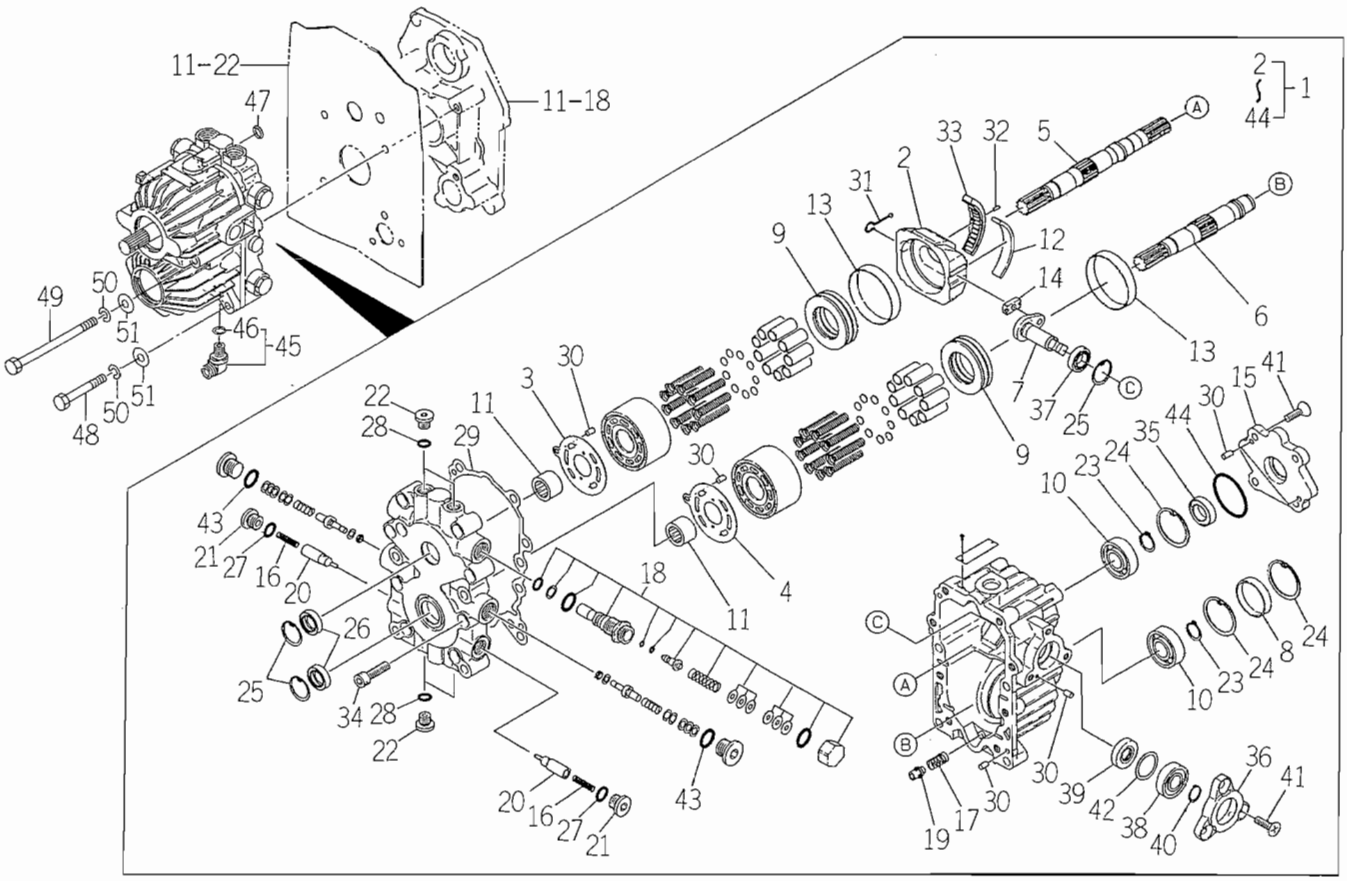

1683-202

KEY	PART CODE	DESCRIPTION	QTY	TYPE OF MODEL TMG18		ITC	COL	GRP	REMARKS
26	1683 - 202 - 524 - 00	SEAL/OIL	2	*					
27	V720 - 112 - 401 - 40	O - RING/P14	2	*					
28	V720 - 112 - 401 - 10	RING/O	4	*					
29	1683 - 202 - 525 - 00	GASKET	1	*					
30	1683 - 202 - 526 - 00	PIN	8	*					
31	1683 - 202 - 527 - 00	GUIDE ASSY	1	*					
32	1683 - 202 - 528 - 00	PIN	1	*					
33	1683 - 202 - 519 - 00	VALVE/S/A	1	*					
34	V220 - 541 - 003 - 50	SCREW/SOCKET	8	*					
35	1683 - 202 - 531 - 00	SEAL/OIL	1	*					
36	1683 - 202 - 532 - 00	COVER	1	*					
37	1683 - 202 - 533 - 00	BEARING/BALL	1	*					
38	1683 - 202 - 534 - 00	BEARING/BALL	1	*					
39	1683 - 202 - 535 - 00	SEAL/OIL	1	*					
40	V704 - 140 - 017 - 00	RING,SNAP/17 C	1	*					
41	1683 - 202 - 536 - 00	SCREW	7	*					
42	1683 - 202 - 537 - 00	WASHER	1	*					
43	V720 - 112 - 401 - 80	O - RING/P18	2	*					
44	1683 - 202 - 538 - 00	RING/O	1	*					
45	1683 - 273 - 640 - 00	ADAPTER/L/PF3/8 ASSY	1	*					
46	V720 - 112 - 401 - 40	O - RING/P14	1	*					
47	V720 - 102 - 401 - 40	O - RING/P14	1	*					
48	V201 - 361 - 007 - 50	BOLT	2	*					
49	V201 - 361 - 014 - 00	BOLT	2	*					
50	V401 - 160 - 010 - 00	WASHER,SP/M10	4	*					

FIG. 13 HST SYSTEM

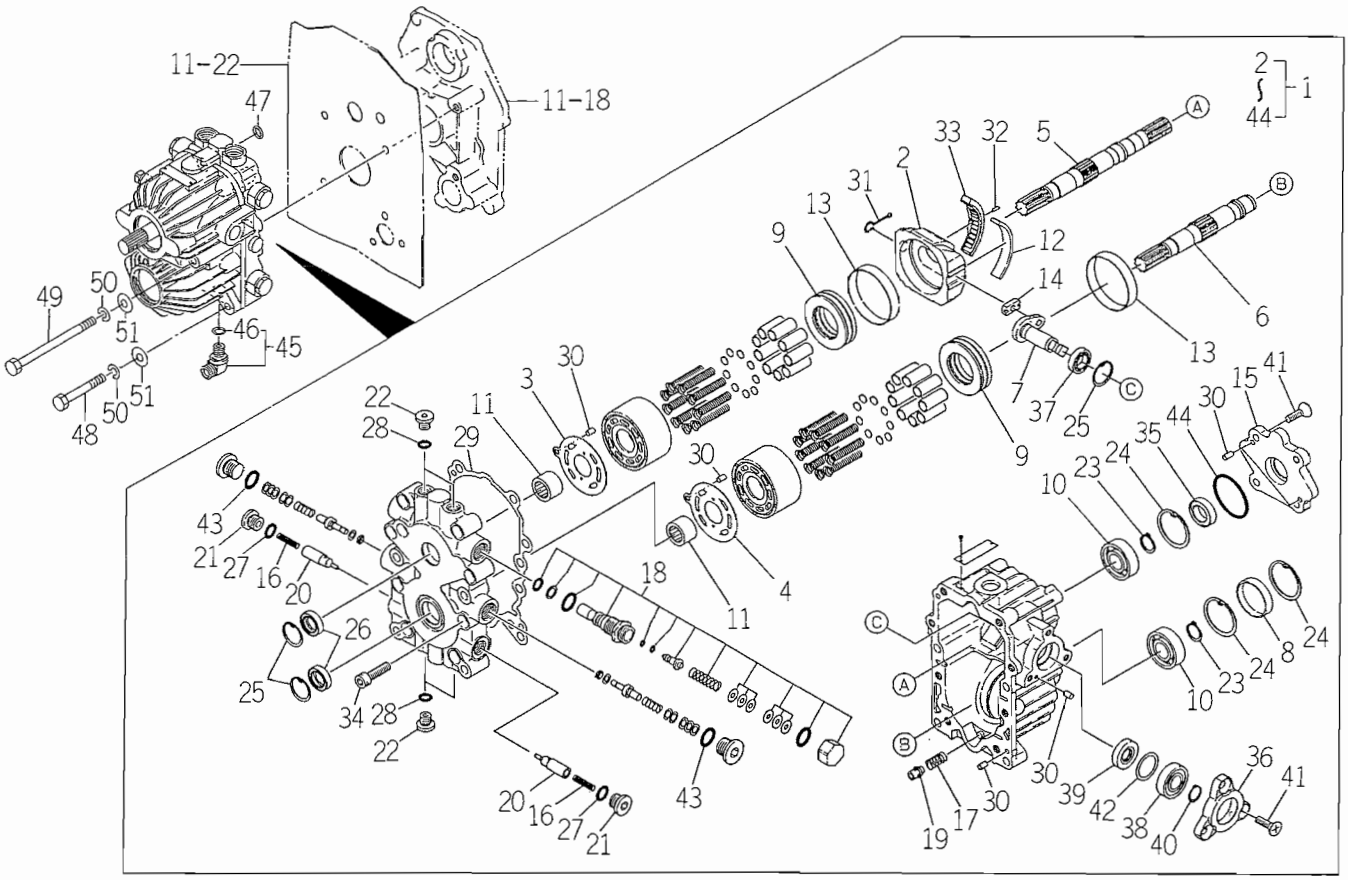

1683-202

KEY	PART CODE	DESCRIPTION	QTY	TYPE OF MODEL TMG18		ITC	COL	GRP	REMARKS
51	V411 - 260 - 010 - 00	WASHER/M10	4	*					

FIG. 14 DRIVE GEAR SYSTEM (EXCEPT S TYPE)

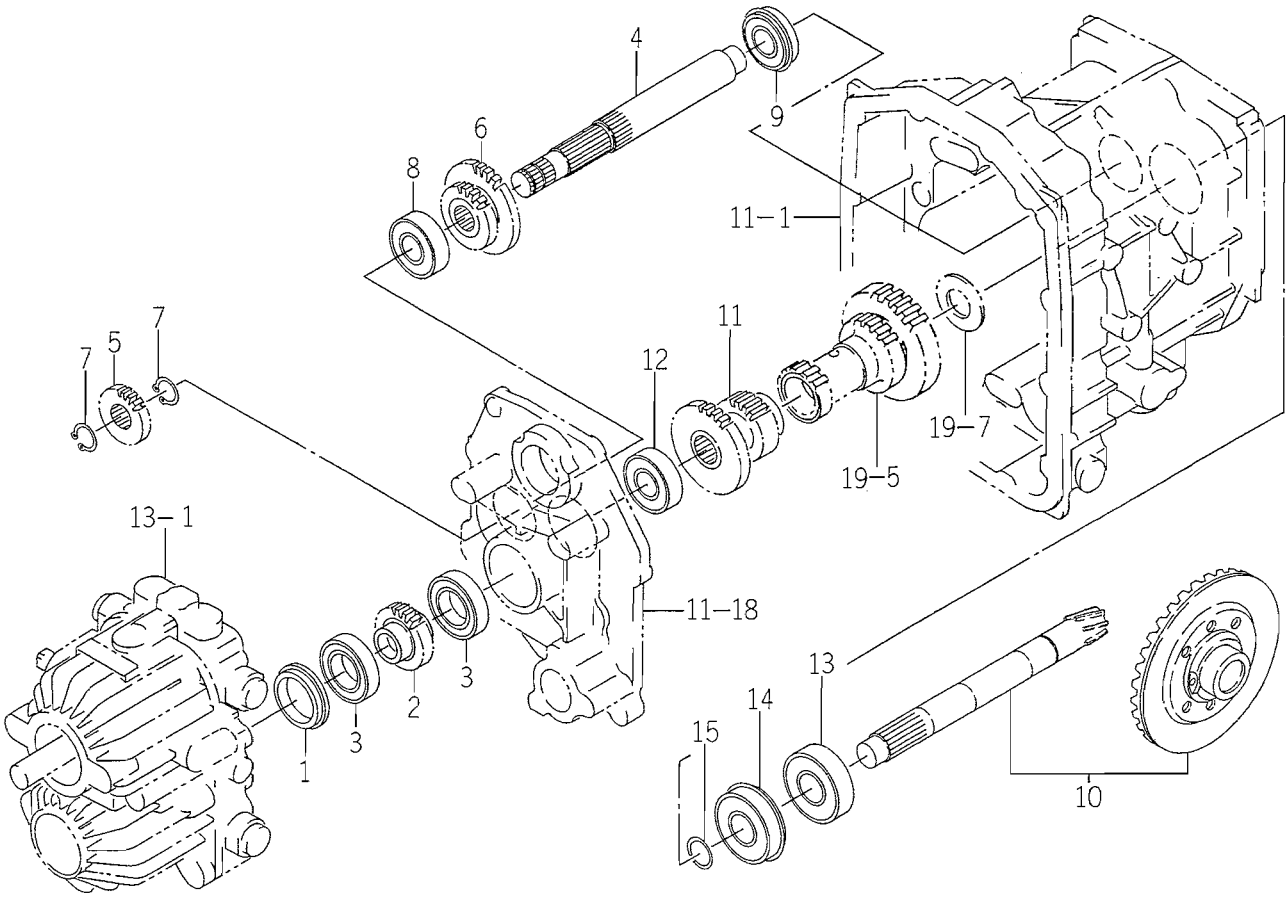

1683-203

KEY	PART CODE	DESCRIPTION	QTY	TYPE OF MODEL TMG18		ITC	COL	GRP	REMARKS
1	1683 - 202 - 051 - 00	COLLAR/41X55X10	1	*					
2	1683 - 203 - 051 - 00	GEAR/SPUR/19	1	*					
3	V600 - 111 - 600 - 60	BEARING,RB	2	*					
4	1683 - 203 - 052 - 00	SHAFT/SUB	1	*					
5	1683 - 203 - 053 - 00	GEAR/SPUR/17	1	*					
6	1683 - 203 - 054 - 00	GEAR/SPUR/19 - 29	1	*					
7	V704 - 140 - 020 - 00	RING,SNAP/20C	2	*					
8	V600 - 110 - 630 - 40	BEARING,RB/6304	1	*					
9	V607 - 110 - 620 - 40	BEARING,RB/6204NR	1	*					
10	1683 - 203 - 500 - 00	PINION/BEVEL SET	1	*					
11	1683 - 203 - 055 - 00	GEAR/SPUR/19 - 29	1	*					
12	V600 - 110 - 630 - 40	BEARING,RB/6304	1	*					
13	1594 - 218 - 001 - 00	BEARING/BALL 6305SH2	1	*					
14	1491 - 203 - 006 - 10	BEARING	1	*					
15	1427 - 203 - 002 - 00	RING,SNAP/25	1	*					

FIG. 15 DRIVE GEAR SYSTEM (S TYPE)

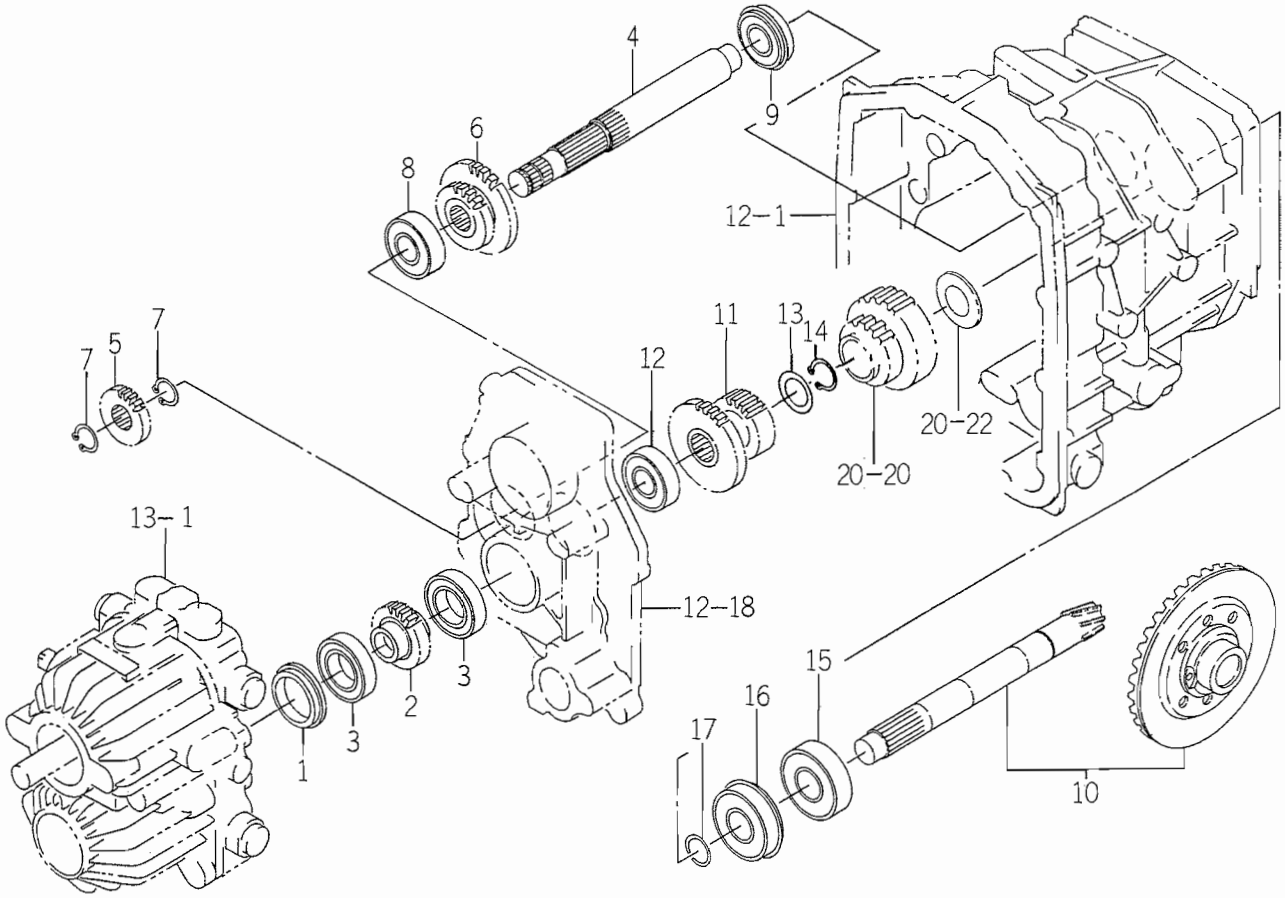

1688-203

KEY	PART CODE	DESCRIPTION	QTY	TYPE OF MODEL TMG18		ITC	COL	GRP	REMARKS
1	1683 - 202 - 051 - 00	COLLAR/41X55X10	1	*					
2	1683 - 203 - 051 - 00	GEAR/SPUR/19	1	*					
3	V600 - 111 - 600 - 60	BEARING,RB	2	*					
4	1683 - 203 - 052 - 00	SHAFT/SUB	1	*					
5	1683 - 203 - 053 - 00	GEAR/SPUR/17	1	*					
6	1683 - 203 - 054 - 00	GEAR/SPUR/19 - 29	1	*					
7	V704 - 140 - 020 - 00	RING,SNAP/20C	2	*					
8	V600 - 110 - 630 - 40	BEARING,RB/6304	1	*					
9	V607 - 110 - 620 - 40	BEARING,RB/6204NR	1	*					
10	1688 - 203 - 500 - 00	PINION/BEVEL/07 SET	1	*					
11	1688 - 203 - 055 - 00	GEAR/SPUR/19 - 29	1	*					
12	V600 - 110 - 630 - 40	BEARING,RB/6304	1	*					
13	1593 - 203 - 058 - 20	COLLAR/25X35X02	1	*					
14	V704 - 140 - 025 - 00	RING,SNAP/25 C	1	*					
15	1594 - 218 - 001 - 00	BEARING/BALL 6305SH2	1	*					
16	1491 - 203 - 006 - 10	BEARING	1	*					
17	1427 - 203 - 002 - 00	RING,SNAP/25	1	*					

FIG. 16 2WD GEAR SYSTEM

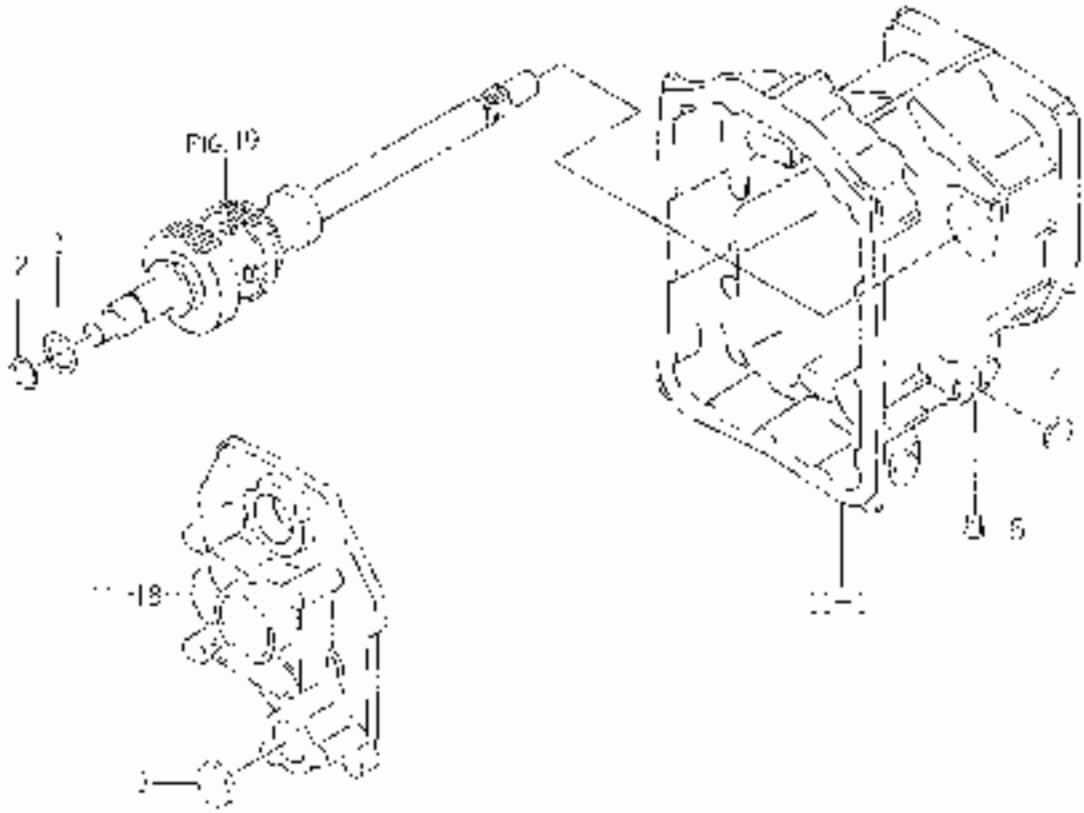

KEY	PART CODE	DESCRIPTION	QTY	TYPE OF MODEL					REMARKS
				TWIN		T C	K O L	G E R	
1	5N8 - 203 - 058 - 00	COLLAR/25X35X02	1	•					
2	V704 140 025 - 00	RING/SNAP/25	1	•					
3	3757 - 211 - 007 - 00	CAP/35	1	•					
4	1614 - 241 - 007 - 00	FLUID/SEAL/25	1	•					
5	1427 - 251 - 004 - 00	CARBLAN/M10	1	•					

FIG. 17 SUB LEVER SYSTEM

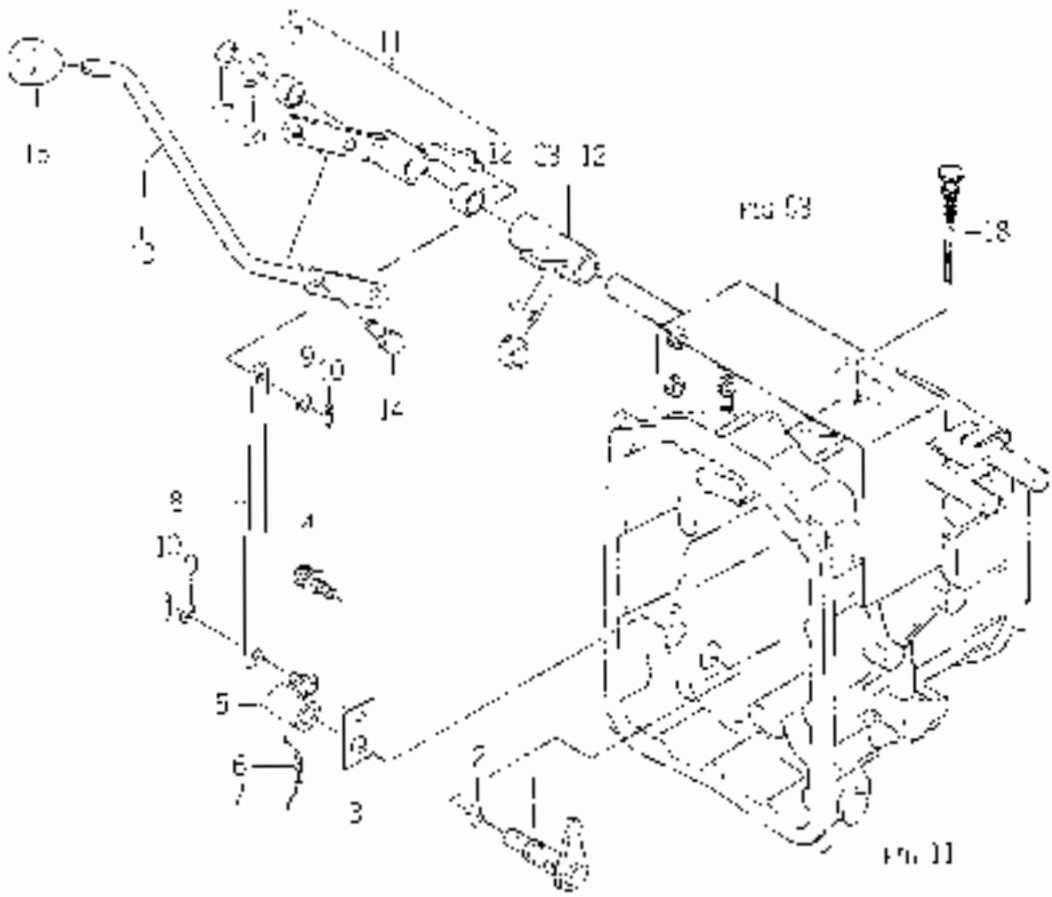

KEY	PART CODE	DESCRIPTION	QTY	TYPE 31 MODEL			REMARKS
	1683 - 208 - 600 - 00	PIN/SHFT	1				
2	V120 - 102 - 201 - 40	C-RING	2				
3	6720 - 200 - 208 - 00	PLATE 1/30X					
4	V211 - 300 - 001 - 00	BOLT/SEVS	1				
5	1683 - 208 - 610 - 00	ARM/SHFT/SUB COVR	1				
6	V080 - 140 - 502 - 50	PIN/SPRING/6 x 25 W					
7		WIRE					
8	1683 - 208 - 001 - 00	PLATE/1/1/BASE	1				
9	V411 - 200 - 008 - 00	WASHER/F M 8	2				
10	V500 - 160 - 000 - 00	PIN/SPLIT/D 42	2				
11	1683 - 208 - 640 - 00	LEVER/SUB ASSY	1				
12	3608 - 612 - 001 - 00	BUSH	2				
13	1683 - 208 - 053 - 00	LEVER/SUB	1				
14	V211 - 261 - 002 - 00	BOLT/SEMS	2				
15	1644 - 218 - 003 - 00	KNOB OVER/S					
16	2144 - 410 - 022 - 00	WASHER/16X28X2					
17	V703 - 140 - 018 - 00	RING/SNAP 16					
18	2130 - 208 - 004 - 00	LEVEL GAUGE					

FIG. 18 SUB CHANGE SYSTEM

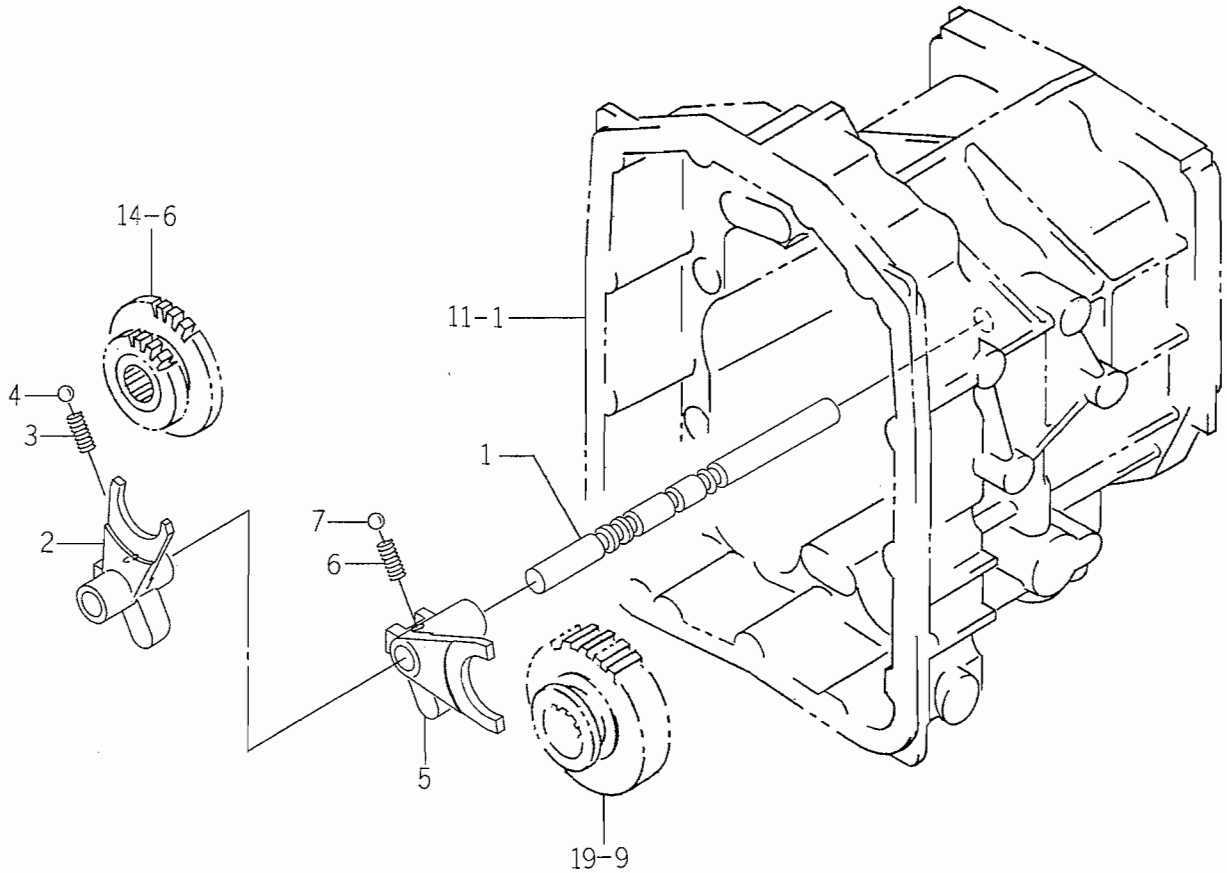

1683-210

KEY	PART CODE	DESCRIPTION	QTY	TYPE OF MODEL TMG18		ITC	COL	GRP	REMARKS
1	1683 - 210 - 051 - 00	STAY/SHIFT/HST	1	*					
2	1683 - 210 - 052 - 00	FORK/SHIFT/SUB	1	*					
3	1650 - 253 - 003 - 00	SPRING/HC022	1	*					
4	V682 - 200 - 001 - 00	BALL	1	*					
5	1683 - 210 - 053 - 00	FORK/SHIFT/PTO	1	*					
6	1650 - 253 - 003 - 00	SPRING/HC022	1	*					
7	V682 - 200 - 001 - 00	BALL	1	*					

FIG. 19 PTO GEAR SYSTEM (EXCEPT S TYPE)

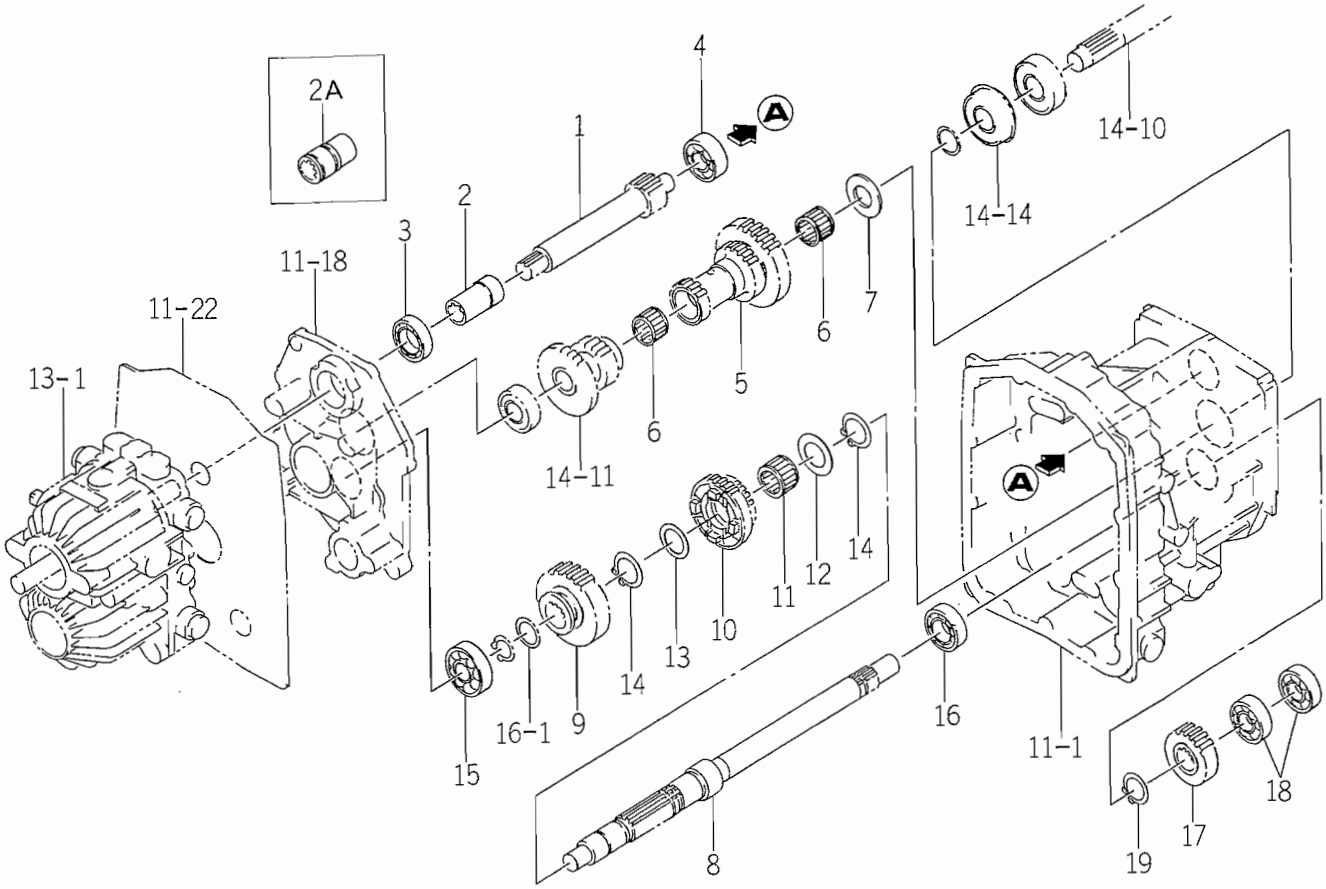

1688-211

KEY	PART CODE	DESCRIPTION	QTY	TYPE OF MODEL TMG18		ITC	COL	GRP	REMARKS
1	1688 - 211 - 001 - 00	GEAR/SPUR/13	1	*					
2	1683 - 211 - 058 - 00	HUB/PTO/HST	1	1- -200					
2A	1683 - 211 - 058 - 10	HUB/PTO/HST	1	201-		3			
3	V600 - 110 - 620 - 60	BEARING,RB/6206	1	*					
4	V600 - 110 - 620 - 40	BEARING,RB/6204	1	*					
5	1688 - 211 - 002 - 00	GEAR/SPUR/18 - 25 - 35	1	*					
6	V654 - 425 - 322 - 40	BEARING KT253224	2	*					
7	1435 - 203 - 001 - 00	COLLAR/25X46X3	1	*					
8	1683 - 211 - 052 - 20	SHAFT/DRIVE/PTO	1	*					
9	1683 - 211 - 053 - 10	GEAR/SPUR/32	1	*					
10	1683 - 211 - 054 - 00	GEAR/SPUR/24 - 30	1	*					
11	V654 - 430 - 382 - 40	BEARING,NR/KT303824	1	*					
12	1560 - 208 - 018 - 40	WASHER/30X46X2	1	*					
13	1544 - 322 - 002 - 00	WASHER/30X40X2	1	*					
14	V704 - 140 - 030 - 00	RING,SNAP/30 C	2	*					
15	V600 - 110 - 630 - 40	BEARING,RB/6304	1	*					
16	V600 - 110 - 620 - 50	BEARING,RB/6205	1	*					
17	1672 - 211 - 009 - 10	GEAR/SPUR/19	1	*					
18	V600 - 110 - 620 - 40	BEARING,RB/6204	2	*					
19	V704 - 140 - 025 - 00	RING,SNAP/25 C	1	*					

FIG. 20 PTO GEAR SYSTEM (S TYPE)

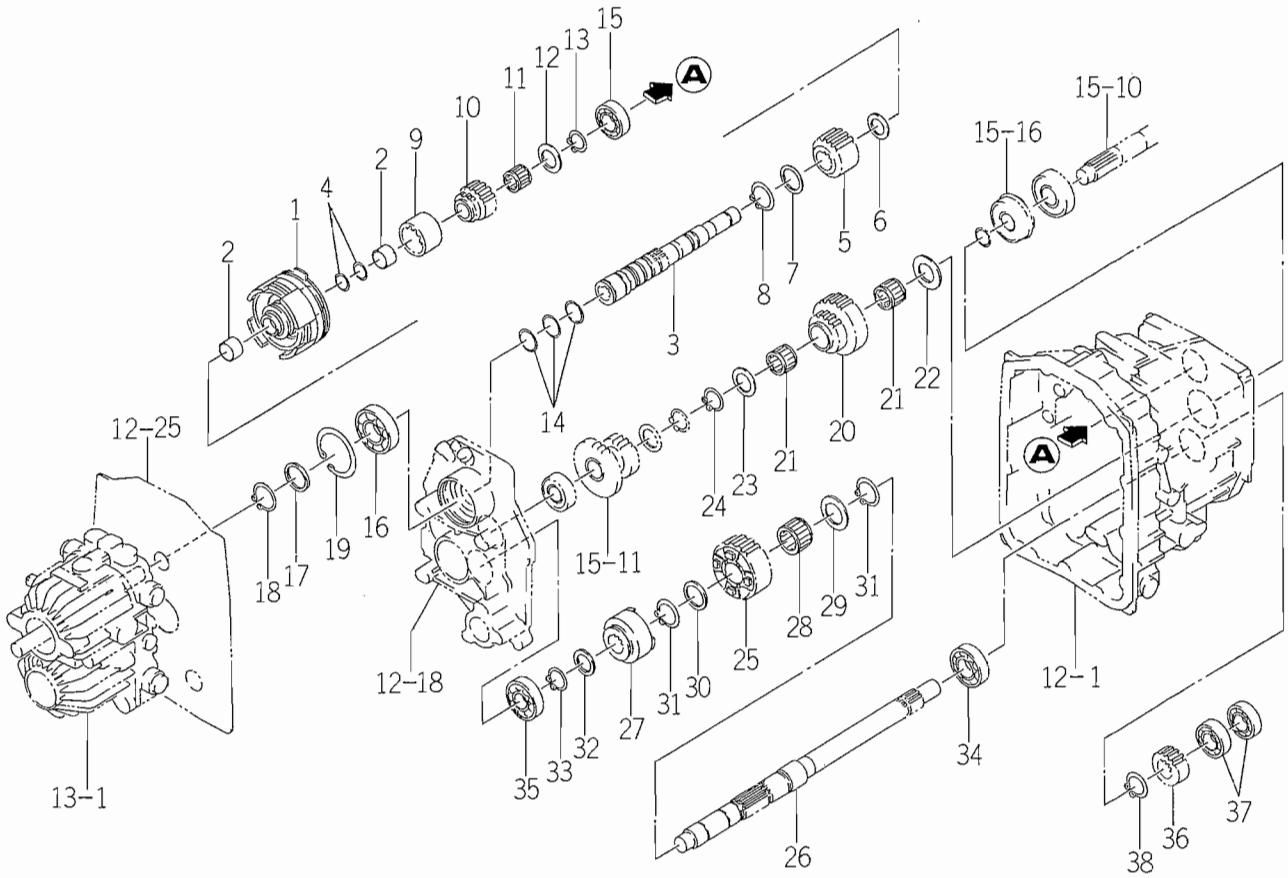

1688-211A

KEY	PART CODE	DESCRIPTION	QTY	TYPE OF MODEL TMG18		ITC	COL	GRP	REMARKS
1	1688 - 211 - 500 - 00	CLUTCH/PTO ASSY	1	*					FIG 080
2	1688 - 211 - 058 - 00	BUSH/22X25X15	2	*					
3	1688 - 211 - 510 - 10	SHAFT/PTO COMP	1	*		1			
4	1688 - 211 - 057 - 00	RING/22	2	*					
5	1688 - 211 - 051 - 00	GEAR/SPUR/33	1	*					
6	1480 - 207 - 012 - 00	COLLAR 23X34X2	1	*					
7	1544 - 322 - 002 - 00	WASHER/30X40X2	1	*					
8	V704 - 140 - 030 - 00	RING,SNAP/30 C	1	*					
9	1688 - 211 - 053 - 00	COUPLING/37X50X35	1	*					
10	1688 - 211 - 052 - 00	GEAR/SPUR/18	1	*					
11	V654 - 420 - 262 - 40	BEARING,NR/KT20264	1	*					
12	3656 - 107 - 004 - 00	WASHER/21X38X02	1	*					
13	V704 - 140 - 020 - 00	RING,SNAP/20C	1	*					
14	1650 - 203 - 008 - 00	RING/30	3	*					
15	V600 - 110 - 620 - 40	BEARING,RB/6204	1	*					
16	V600 - 110 - 620 - 60	BEARING,RB/6206	1	*					
17	1544 - 322 - 002 - 00	WASHER/30X40X2	1	*					
18	V704 - 140 - 030 - 00	RING,SNAP/30 C	1	*					
19	V707 - 140 - 062 - 00	RING/SNAP	1	*					
20	1688 - 211 - 054 - 00	GEAR/SPUR/31 - 20	1	*					
21	V654 - 425 - 322 - 40	BEARING KT253224	2	*					
22	1435 - 203 - 001 - 00	COLLAR/25X46X3	1	*					
23	3650 - 106 - 002 - 00	WASHER/25X42X2	1	*					
24	V704 - 140 - 025 - 00	RING,SNAP/25 C	1	*					
25	1688 - 211 - 055 - 00	GEAR/SPUR/30	1	*					

FIG. 20 PTO GEAR SYSTEM (S TYPE)

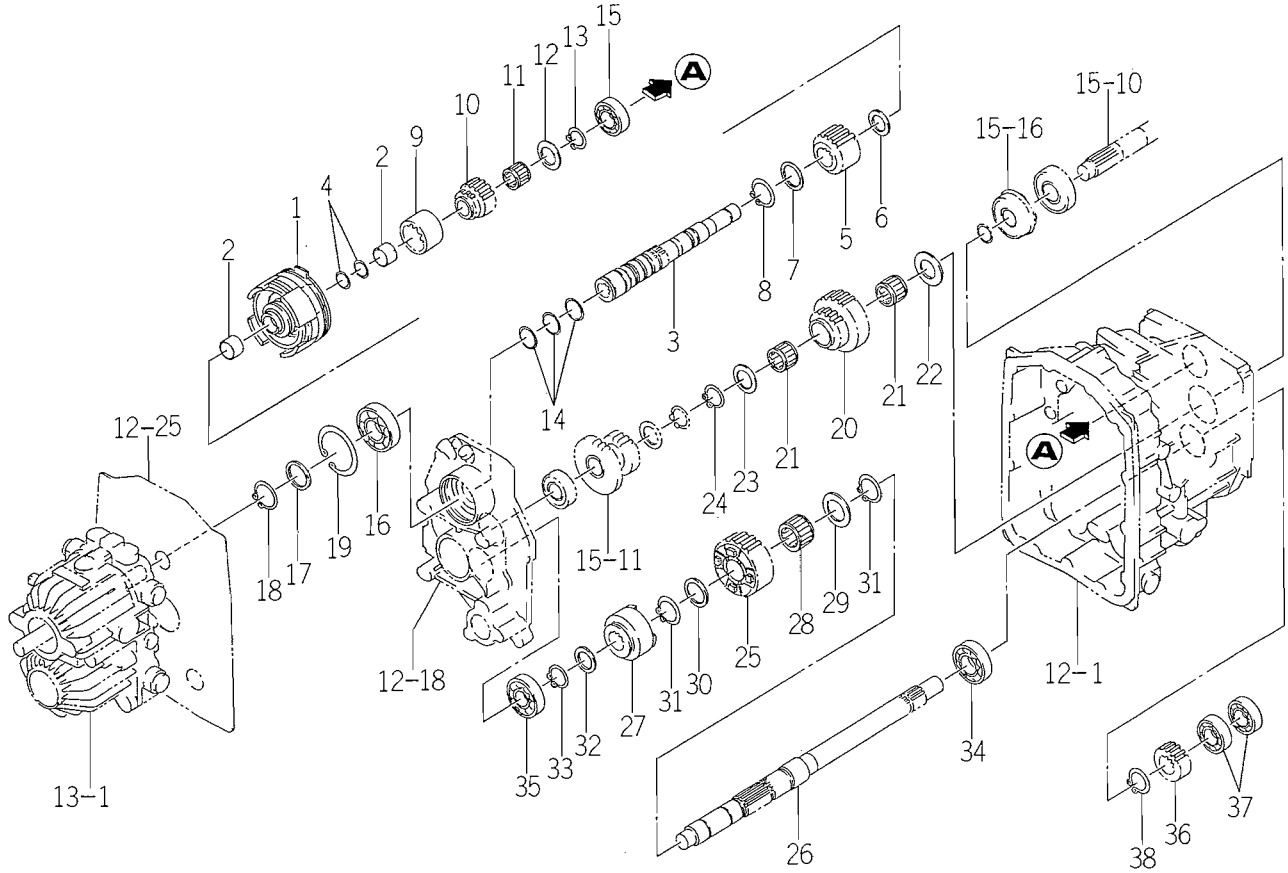

1688-211A

KEY	PART CODE	DESCRIPTION	QTY	TYPE OF MODEL TMG18		ITC	COL	GRP	REMARKS
26	1688 - 211 - 056 - 10	SHAFT/DRIVE/PTO	1	*					
27	1688 - 211 - 059 - 00	HUB/CLUTCH	1	*					
28	V654 - 430 - 382 - 40	BEARING,NR/KT303824	1	*					
29	1560 - 208 - 018 - 40	WASHER/30X46X2	1	*					
30	1544 - 322 - 002 - 00	WASHER/30X40X2	1	*					
31	V704 - 140 - 030 - 00	RING,SNAP/30 C	2	*					
32	1593 - 203 - 058 - 20	COLLAR/25X35X02	1	*					
33	V704 - 140 - 025 - 00	RING,SNAP/25 C	1	*					
34	V600 - 110 - 620 - 50	BEARING,RB/6205	1	*					
35	V600 - 110 - 630 - 40	BEARING,RB/6304	1	*					
36	1688 - 211 - 061 - 00	GEAR/SPUR/13	1	*					
37	V600 - 110 - 620 - 40	BEARING,RB/6204	2	*					
38	V704 - 140 - 025 - 00	RING,SNAP/25 C	1	*					

FIG. 21 PTO SHAFT SYSTEM (EXCEPT S TYPE)

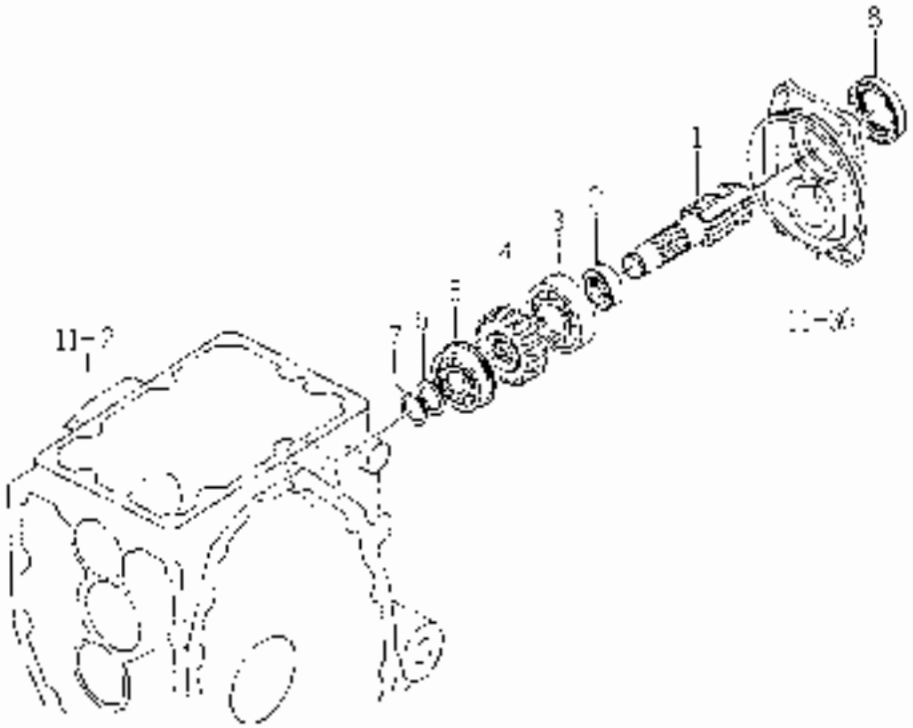

KEY	PART CODE	DESCRIPTION	QTY	TYPE OF MODEL TM18		ITC	COL	GRF	REMARKS
1	1072-212-001-00	SHAFT, PTO	1						
2	1427-212-000-70	SLEEVE	1						
3	1594-[illegible]-00[illegible]-00	BRACKET BALL BACKUP	1						
4	1071-212-002-10	GEAR/SPUR/19	1						
5	V607-110-630-40	BEARING,RB/ASSINR	[illegible]						
6	1427-717-007-00	WASHER/[illegible]	[illegible]						
7	V704-140-020-00	RING,SNAP/20C	[illegible]						
8	V744-1[illegible]-550-30	SEAL,OIL/1025x38	[illegible]						

FIG. 22 PTO SHAFT SYSTEM (S TYPE)

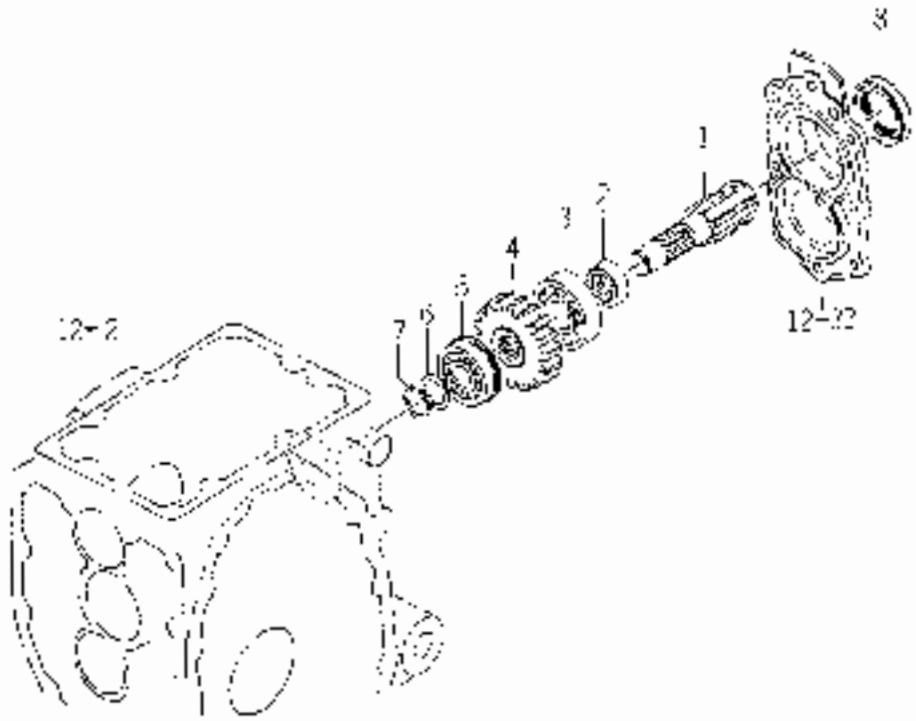

KEY	PART CODE	DESCRIPTION	QTY	TYPE OF MODEL TM18		ICC	COL	CRP	REMARKS
1	1072 - 212 - 001 - 00	SHAFT/PTO	1	●					
2	1427 - 212 - 003 - 20	SLEEVE	1	●					
3	1594 - 218 - 001 - 00	BEARING/BALL BX35NPP	1	●					
4	1688 - 212 - 001 - 10	GEAR/SPUR/25		●					
5	V007 - 110 - 630 - 40	BEARING,RB/U204NR		●					
6	1421 - 212 - 002 - 00	WASHER/20X28X2	1	●					
7	V704 - 140 - 020 - 00	RING,SNAP/20C	1	●					
8	V744 - 135 - 550 - 50	SHAFT / 103563	1	●					

FIG. 23 PTO LEVER SYSTEM (EXCEPT S TYPE)

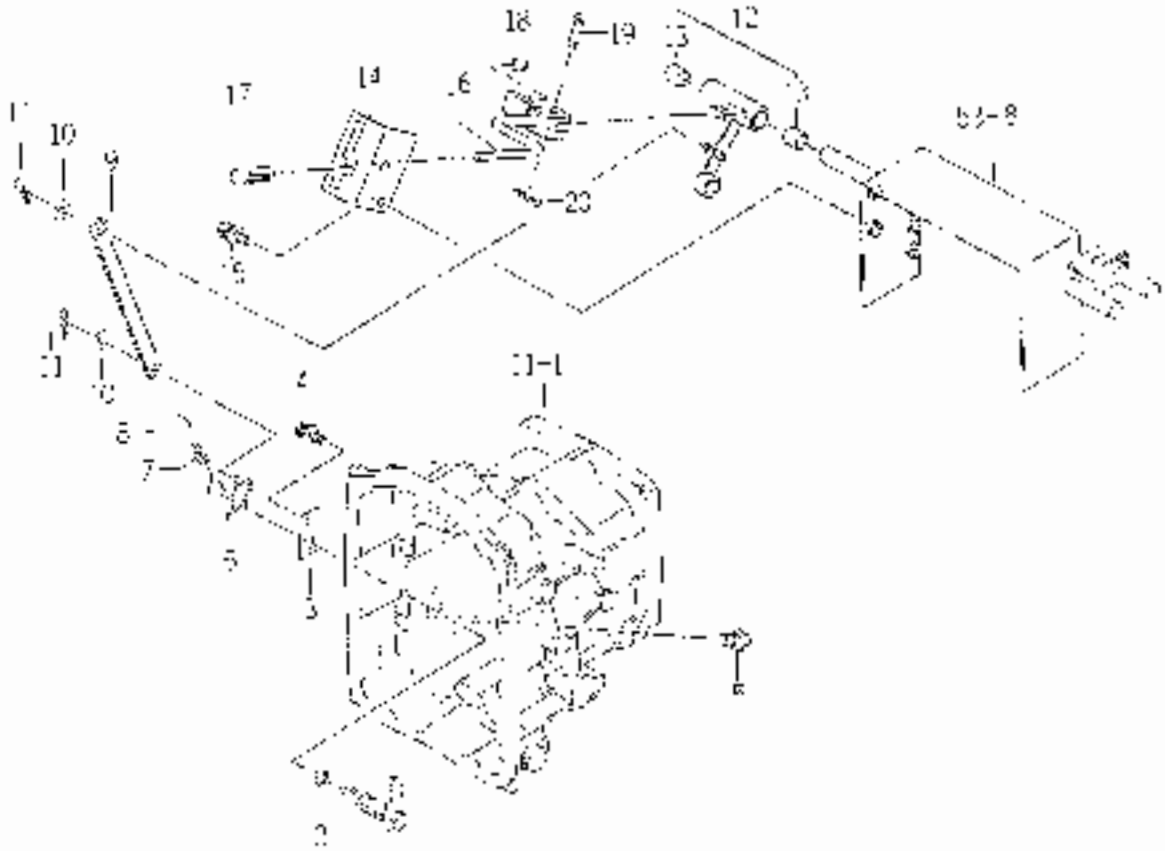

KEY	PART CODE	DESCRIPTION	QTY	TYPE OF MODEL		ITC	CODE	GRP	REMARKS
1	1600-700-500-00	PIN/SHIFT COMP	1						
2	V720-102-401-10	O RING/[illegible]	2						
3	1820-266-208-10	PLATE/T/20X50	1						
4	V211-380-801-50	BOLT/20X6 [illegible]	1						
5	V201-261-207-00	BOLT/M12X30	1						
6	1683-209-520-00	ARM/SHIFT COMP	1						
7	V500-142-802-50	PIN/SPRING/8 X25 N	1						
8		W/C	1						
9	1683-216-052-00	PLATE T/18X24	1						
10	V[illegible]-260-008-00	WASHER PL/V 8	2						
11	V500-163-002-00	PIN/SPLIT S X20	2						
12	1884-[illegible]-620-00	ARM/PTO ASSY	1						
13	3500-[illegible]-[illegible]-00	BUSH	2						
14	1657-216-051-10	GUIDE/O-RAGS	1						
15	V2[illegible]-390-802-00	BOLT [illegible] M8X20	2						
16	1683-216-500-00	LEVER/PTO COMP	1						
17	3840-585-001-00	SLIP/YELLOW	1						
18	2140-601-031-00	BRING [illegible]024	1						
19	2144-518-007-00	PIN/GRXA1	1						
20	V500-162-502-00	PIN/SPLIT/25X30	1						

FIG. 24 PTO LEVER SYSTEM (S TYPE)

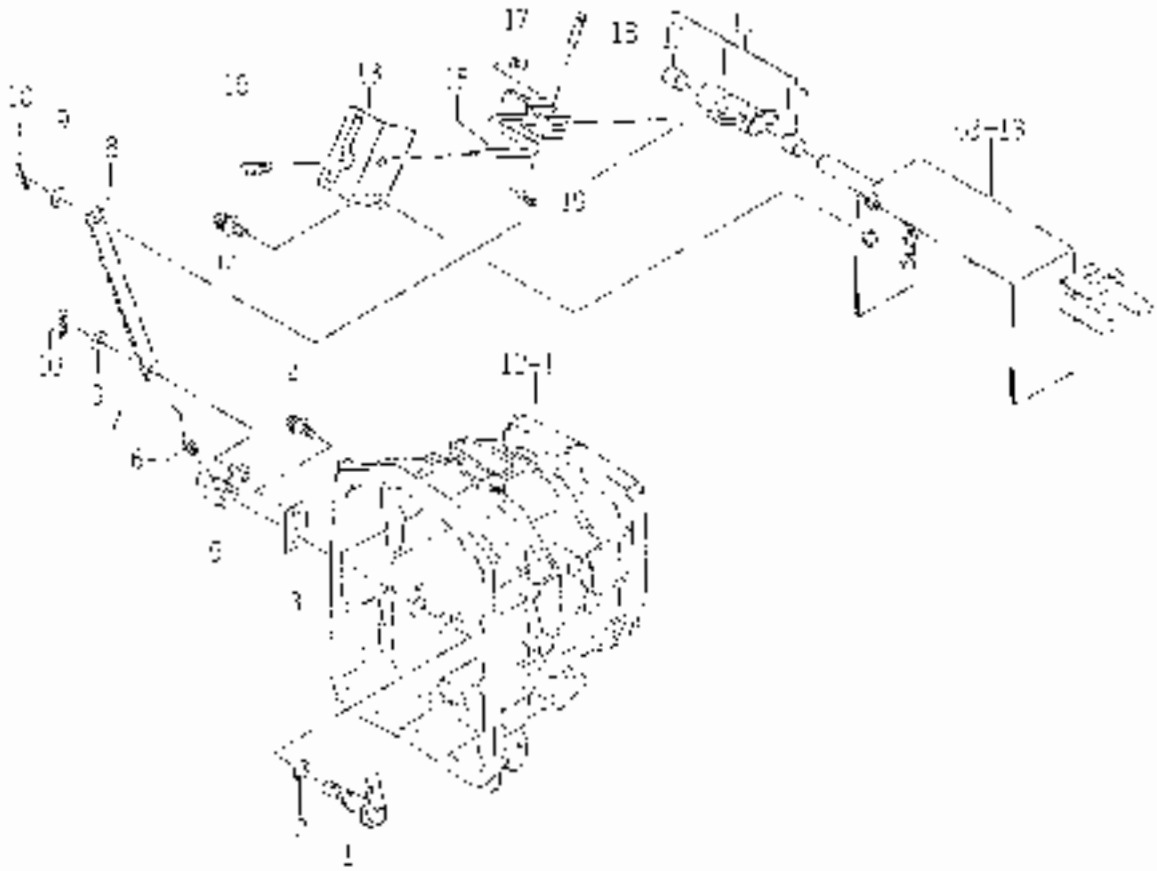

KEY	PART CODE	DESCRIPTION	QTY	TYPE OF MODEL	REMARKS
1	1685 209 - 000 00	PIN/SHAFT COMP	1		
2	9730 102 401 - 40	C RING/P14	2		
3	1690 - 702 - 208 00	PLATE/ /30×50	1		
4	V211 080 - 001 - 80	BOLT/SPRING CPT	1		
5	1683 - 265 510 - 00	ARM/SHAFT/MID COMP	1		
6	V580 - 140 - 802 - 50	PIN/SPRING/6 X25 N	1		
7		WIRE	1		
8	1686 215 - 051 - 00	PLATE/L 10×273	1		
9	V411 260 006 00	WASHER/L M 8	2		
10	V600 - 103 007 - 00	PIN/SPLIT/3 X20	2		
11	1688 - 216 500 - 00	ARM/PTO ASSY	1		
12	9668 612 - 001 - 00	BUSH	2		
13	1603 716 - 051 - 10	GUIDE CHANGE	1		
14	V211 360 502 00	BOLT SP 12×20	2		
15	1600 - 716 - 500 - 00	LEVER/PTO COMP	1		
16	3040 - 592 - 001 - 00	GUIDE/YELLOW	1		
17	3129 - 601 - 031 - 00	SPRING/T-COIL	1		
18	2144 119 007 - 00	PIN 6×31	1		
19	V500 - 102 - 502 - 00	PIN/SPLIT/2.5×20	1		

FIG. 25 MID PTO SYSTEM

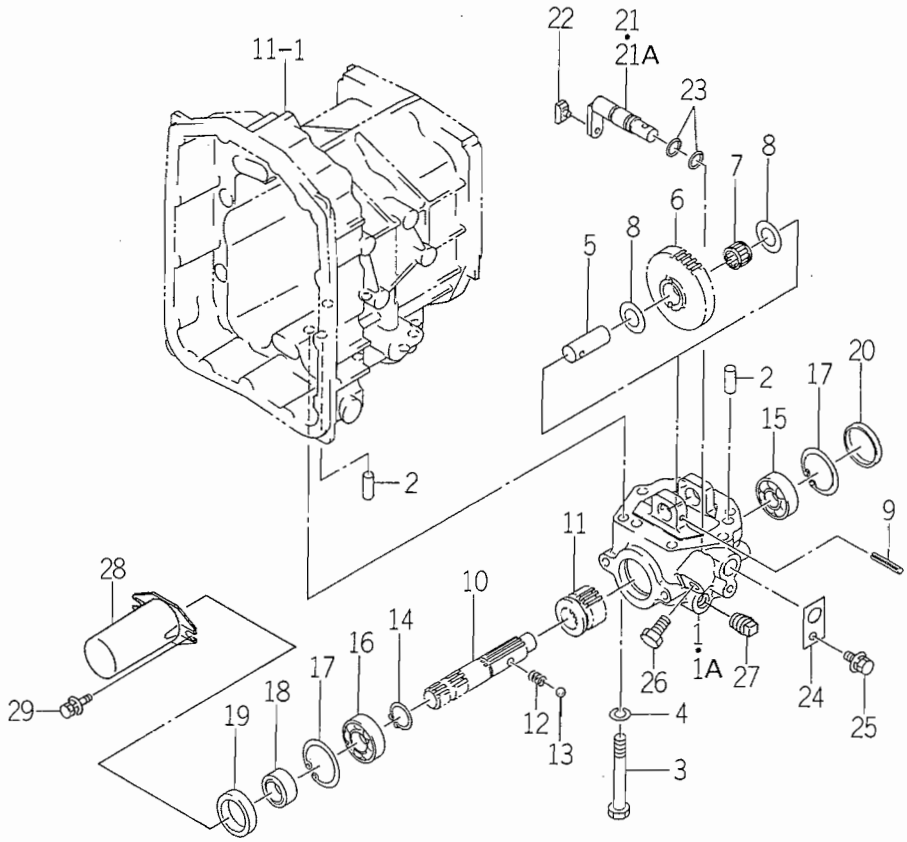

1683-255

KEY	PART CODE	DESCRIPTION	QTY	TYPE OF MODEL TMG18		ITC	COL	GRP	REMARKS
1	1682 - 255 - 201 - 00	CASE/PTO/MID	1	1- -209					
1A	1682 - 255 - 201 - 10	CASE/PTO/MID	1	210-		1			
2	V523 - 101 - 002 - 40	PIN	2	*					
3	V201 - 361 - 009 - 00	BOLT/M10X90	6	*					
4	V401 - 160 - 010 - 00	WASHER,SP/M10	6	*					
5	1682 - 255 - 203 - 00	PIN/20X51	1	*					
6	1682 - 255 - 202 - 00	GEAR/SPUR/34	1	*					
7	1682 - 255 - 002 - 10	BEARING/NEEDLE	1	*		1			
8	1480 - 212 - 003 - 00	COLLAR/21X36X1	2	*					
9	V580 - 140 - 604 - 00	PIN,SPRING/6 X40 W	1	*					
10	1682 - 255 - 204 - 00	SHAFT/PTO/MID	1	*					
11	1682 - 255 - 205 - 10	GEAR/SPUR/15	1	*					
12	1302 - 225 - 003 - 00	SPRING,SHIFTER	1	*					
13	V682 - 200 - 001 - 00	BALL	1	*					
14	V704 - 140 - 025 - 00	RING,SNAP/25 C	1	*					
15	V600 - 110 - 630 - 40	BEARING,RB/6304	1	*					
16	V600 - 110 - 620 - 50	BEARING,RB/6205	1	*					
17	V705 - 140 - 052 - 00	RING,SNAP/52 C	2	*					
18	1427 - 212 - 003 - 20	SLEEVE	1	*					
19	V744 - 135 - 520 - 80	SEAL,OIL/TC35528	1	*					
20	3625 - 701 - 003 - 00	CAP,BLANK/52	1	*					
21	1682 - 255 - 210 - 30	ARM/SHIFT/MID COMP	1	1- -209					
21A	1682 - 255 - 210 - 40	ARM/SHIFT/MID COMP	1	210-		1			
22	2703 - 101 - 020 - 00	COLLAR,SHIFTER	1	*					
23	V720 - 102 - 401 - 40	O - RING/P14	2	*					

FIG. 25 MID PTO SYSTEM

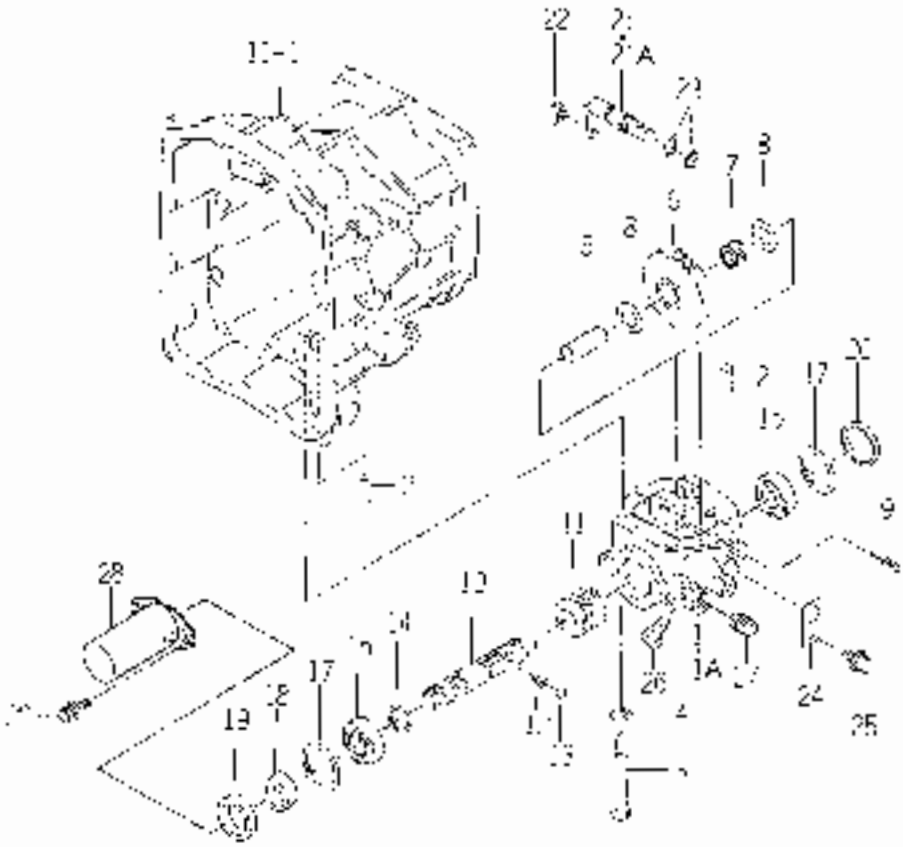

KEY	PART CODE	DESCRIPTION	QTY	TYPE OF MODEL		ITC	COD	GRP	REMARKS
24	1820 - 255 - 206 - 00	PLATE/U/BOXES	1						
25	V211 - 060 - 001 - 00	BOLT/SEMI - SPC	1						
26	V209 - 081 - 209 - 00	BOLT/M12X20	1						
27	V781 - 100 - 000 - 69	PLUG/SCREW/SEAL	1						
28	1444 - 314 - 009 - 10	CARDTO SHAFT	1						
29	V210 - 000 - 002 - 00	BOLT/SP	2						

FIG. 26 MID PTO LEVER SYSTEM

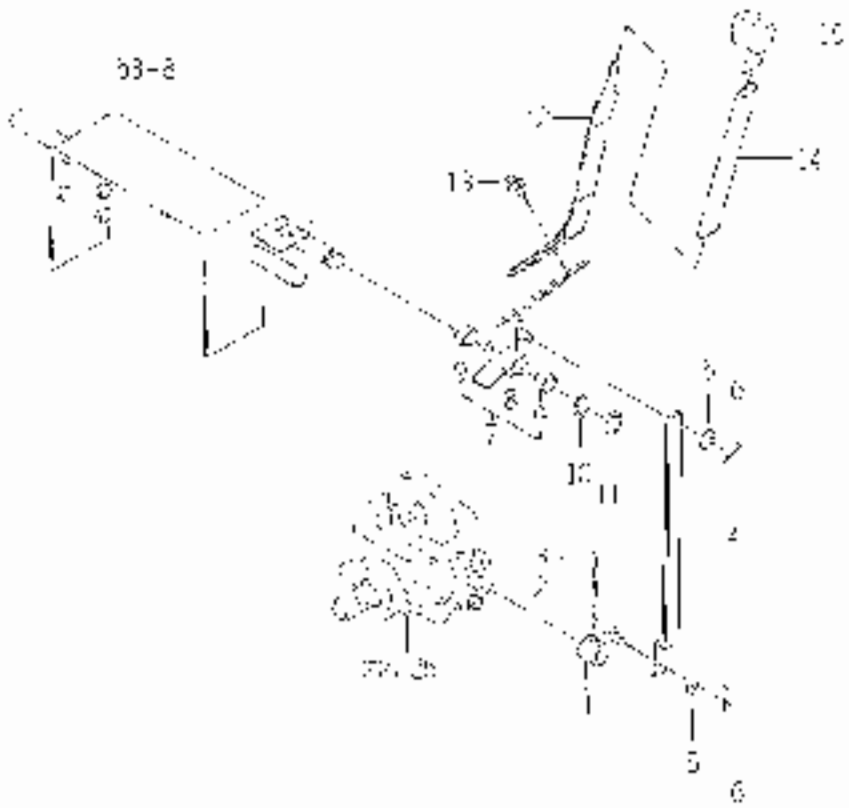

KEY	PART CODE	DESCRIPTION	QTY	TYPE OF MODEL 1M018			I C	C O	G R P	REMARKS
1	1023 - 205 - 510 - 00	ARM/SHAFT/ASD COMP	1	•						
2	V550 140 502 00	PIN,SPRING 3/6 X25 W	1	•						
3		WIRE		•						
4	1669 265 051 00	PLATE/Z/19X26	1	•						
5	V411 260 - 008 - 00	WASHER/	2	•						
6	V500 103 002 00	PINION T/S X20	2	•						
7	1659 265 - 520 - 00	ARM/MID ASSY		•						
8	1083 - 205 - 500 20	ARM/MID COMP	1	•			5			
9	3660 - 612 - 001 - 00	BUSH	2	•						
10	7144 - 418 - 022 - 00	WASHER/16X28X02	1	•						
11	V704 140 013 00	PIN,SNAP,16 2	1	•						
12	072 - 208 - 220 - 00	LEVER SUB COMP	1	•						
13	V711 - 300 - 001 - 00	BOLT,SEMS (SP)	2	•						
14	1672 208 001 00	INSULATOR LEVER/SUB	1	•						
15	1614 - 757 - 000 - 00	SHIM/SUB	1	•						

FIG. 27 LINK SYSTEM (EXCEPT S TYPE)

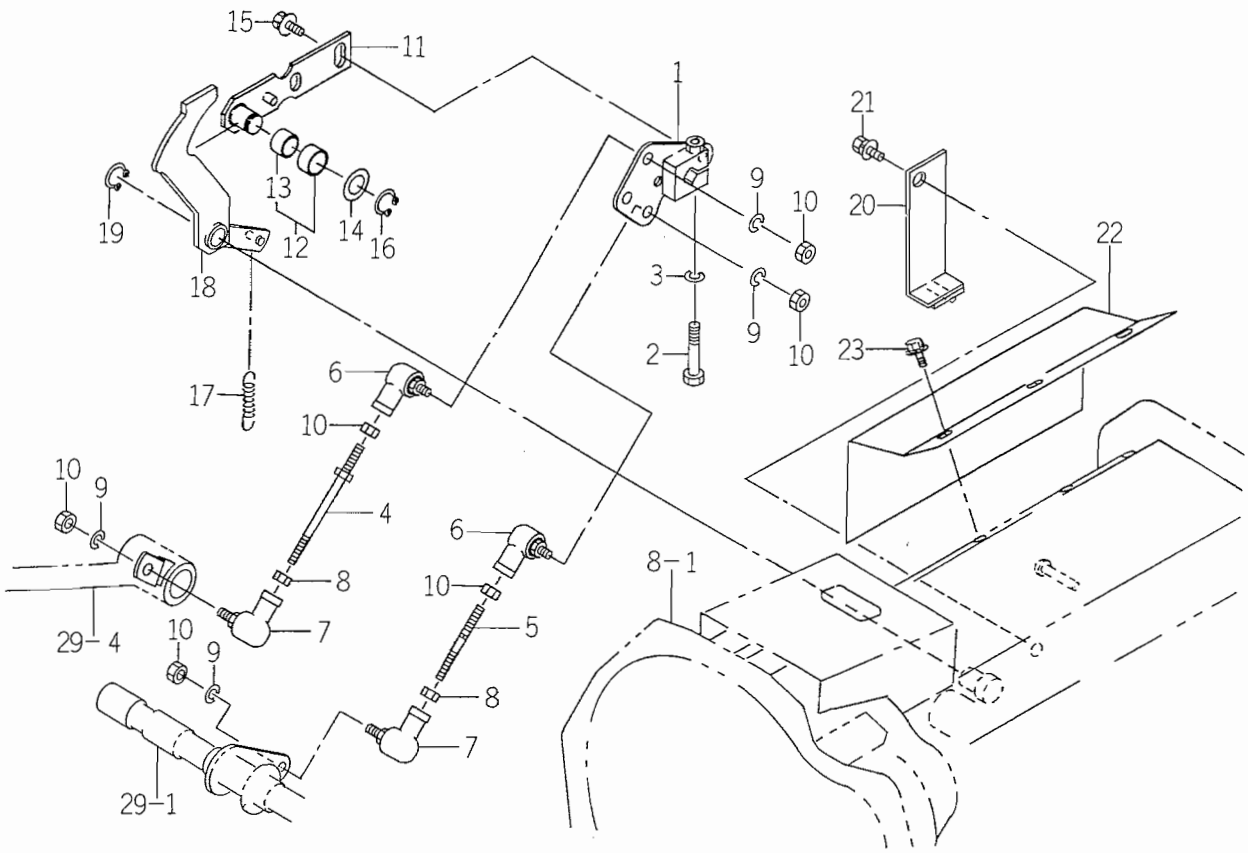

1688-271

KEY	PART CODE	DESCRIPTION	QTY	TYPE OF MODEL TMG18		ITC	COL	GRP	REMARKS
1	1688 - 271 - 510 - 00	PIVOT/TRUNNION COMP	1	*					
2	V201 - 360 - 804 - 50	BOLT/M8X45/7T	1	*					
3	V401 - 160 - 008 - 00	WASHER,SP/M 8	1	*					
4	1683 - 271 - 560 - 00	ROD/M08X110 COMP	1	*					
5	1602 - 242 - 551 - 10	ROD/65	1	*					
6	1560 - 695 - 021 - 00	JOINT BALL M08RH	2	*					
7	1560 - 695 - 022 - 00	JOINT BALL M08LH	2	*					
8	1560 - 132 - 007 - 30	NUT/M8	2	*					
9	V401 - 160 - 008 - 00	WASHER,SP/M 8	4	*					
10	V304 - 260 - 008 - 00	NUT/M 8	6	*					
11	1683 - 271 - 500 - 30	ARM/NEUTRAL COMP	1	*		3			
12	1683 - 271 - 520 - 10	COLLAR/17X21X11 ASSY	1	*					
13	3643 - 420 - 004 - 00	BUSH/15X17X10	1	*					
14	3747 - 342 - 002 - 00	WASHER	1	*					
15	V211 - 360 - 801 - 60	BOLT,SEMS (SP)	2	*					
16	V704 - 140 - 015 - 00	RING,SNAP/15 C	1	*					
17	1105 - 410 - 003 - 00	SPRING/HE067	1	*					
18	1688 - 271 - 580 - 00	ARM COMP	1	*					
19	V704 - 140 - 015 - 00	RING,SNAP/15 C	1	*					
20	1688 - 271 - 590 - 10	PLATE COMP	1	1--210					
21	V211 - 361 - 002 - 50	BOLT/SP	1	1--210					
22	1683 - 271 - 001 - 30	COVER/TRUNNION	1	*					
23	V210 - 360 - 601 - 60	BOLT (SP) /M6X16	3	*					

FIG. 28 LINK SYSTEM (S TYPE)

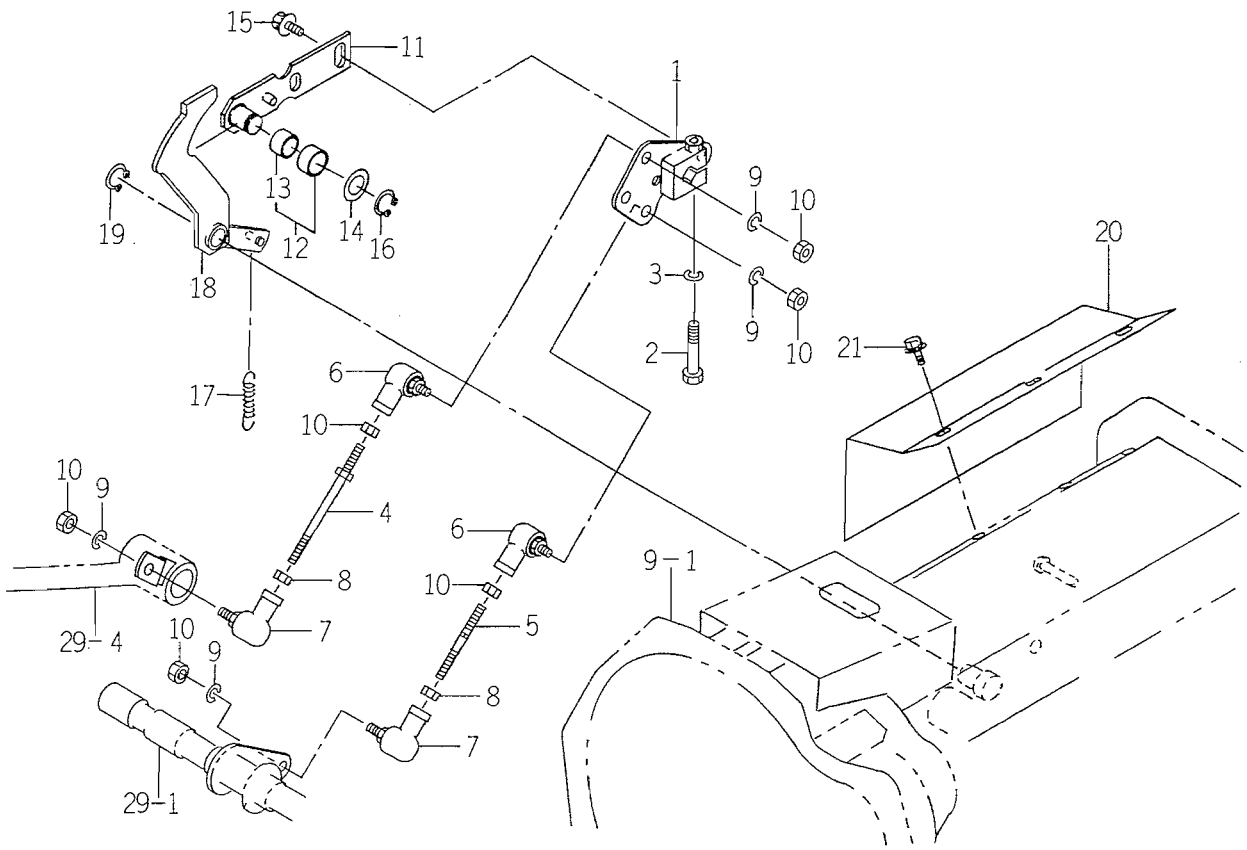

1688-271A

KEY	PART CODE	DESCRIPTION	QTY	TYPE OF MODEL TMG18		ITC	COL	GRP	REMARKS
1	1688 - 271 - 510 - 00	PIVOT/TRUNNION COMP	1	*					
2	V201 - 360 - 804 - 50	BOLT/M8X45/7T	1	*					
3	V401 - 160 - 008 - 00	WASHER,SP/M 8	1	*					
4	1683 - 271 - 560 - 00	ROD/M08X110 COMP	1	*					
5	1602 - 242 - 551 - 10	ROD/65	1	*					
6	1560 - 695 - 021 - 00	JOINT BALL M08RH	2	*					
7	1560 - 695 - 022 - 00	JOINT BALL M08LH	2	*					
8	1560 - 132 - 007 - 30	NUT/M8	2	*					
9	V401 - 160 - 008 - 00	WASHER,SP/M 8	4	*					
10	V304 - 260 - 008 - 00	NUT/M 8	6	*					
11	1683 - 271 - 500 - 30	ARM/NEUTRAL COMP	1	*					
12	1683 - 271 - 520 - 10	COLLAR/17X21X11 ASSY	1	*					
13	3643 - 420 - 004 - 00	BUSH/15X17X10	1	*					
14	3747 - 342 - 002 - 00	WASHER	1	*					
15	V211 - 360 - 801 - 60	BOLT,SEMS (SP)	2	*					
16	V704 - 140 - 015 - 00	RING,SNAP/15 C	1	*					
17	1105 - 410 - 003 - 00	SPRING/HE067	1	*					
18	1688 - 271 - 580 - 00	ARM COMP	1	*					
19	V704 - 140 - 015 - 00	RING,SNAP/15 C	1	*					
20	1683 - 271 - 001 - 30	COVER/TRUNNION	1	*					
21	V210 - 360 - 601 - 60	BOLT (SP) /M6X16	3	*					

FIG. 29 PEDAL SYSTEM

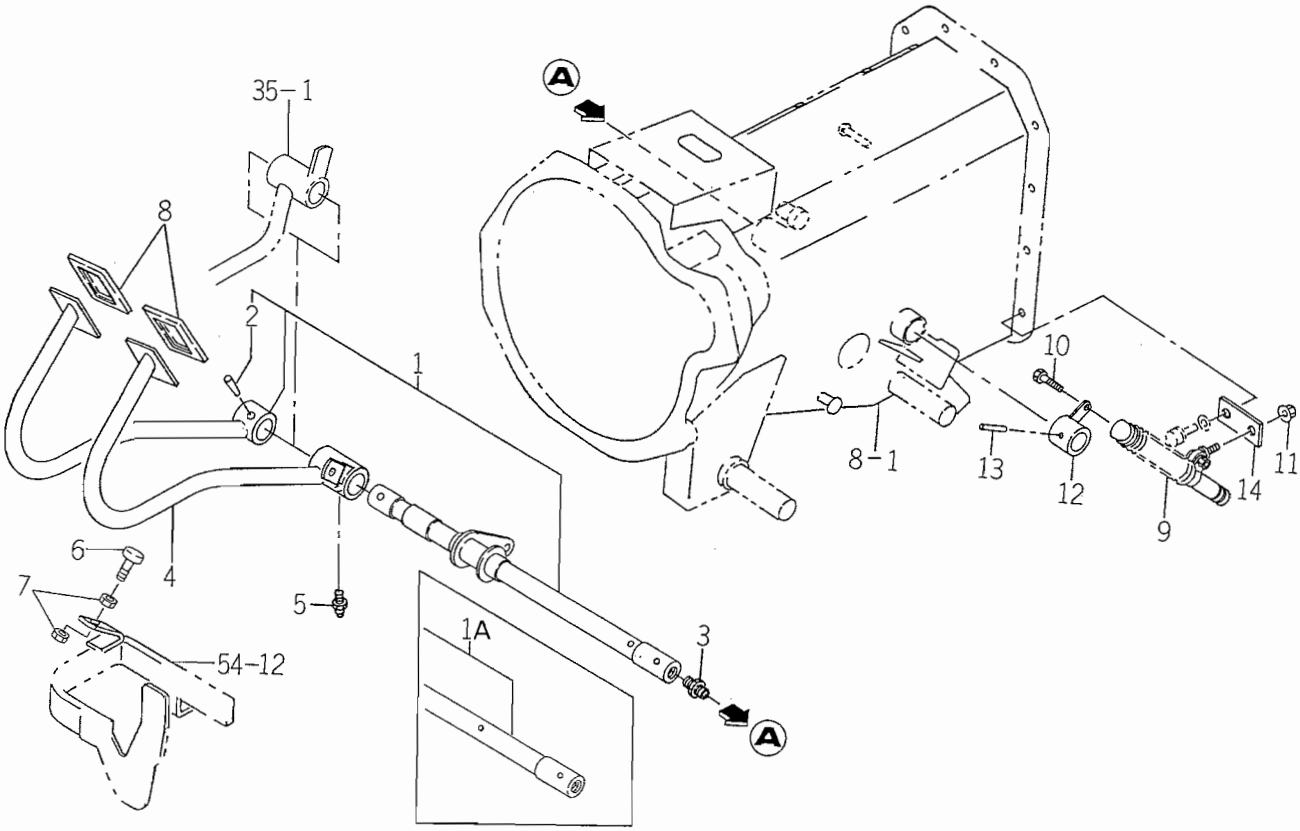

1688-272

KEY	PART CODE	DESCRIPTION	QTY	TYPE OF MODEL TMG18		ITC	COL	GRP	REMARKS
1	1688 - 272 - 500 - 10	PEDAL/HST/R SET	1	1- -131					
1A	1688 - 272 - 500 - 20	PEDAL/HST/R SET	1	132-		1			
2	V511 - 100 - 805 - 00	PIN,TAPER/8X50	1	*					
3	1683 - 272 - 052 - 00	GREECENIPPLE	1	*					
4	1688 - 272 - 530 - 10	PEDAL/HST/F COMP	1	*					
5	V763 - 150 - 000 - 00	NIPPLE,GREASE/PT1/8	1	*					
6	1421 - 602 - 005 - 10	CUSHION,B/ RUBBER	1	*					
7	V304 - 260 - 008 - 00	NUT/M 8	2	*					
8	1620 - 272 - 051 - 00	PAD	2	*					
9	1683 - 272 - 560 - 00	DAMPER (OIL) ASSY	1	*					
10	V201 - 260 - 803 - 00	BOLT/M 8X30	1	*					
11	V362 - 260 - 008 - 00	NUT/WASHER	2	*					
12	1683 - 272 - 550 - 00	ARM/DANPER COMP	1	*					
13	1683 - 272 - 054 - 10	PIN	1	*					
14	1683 - 272 - 053 - 00	PLATE/I/32X63	1	*					

FIG. 30 PIPING SYSTEM

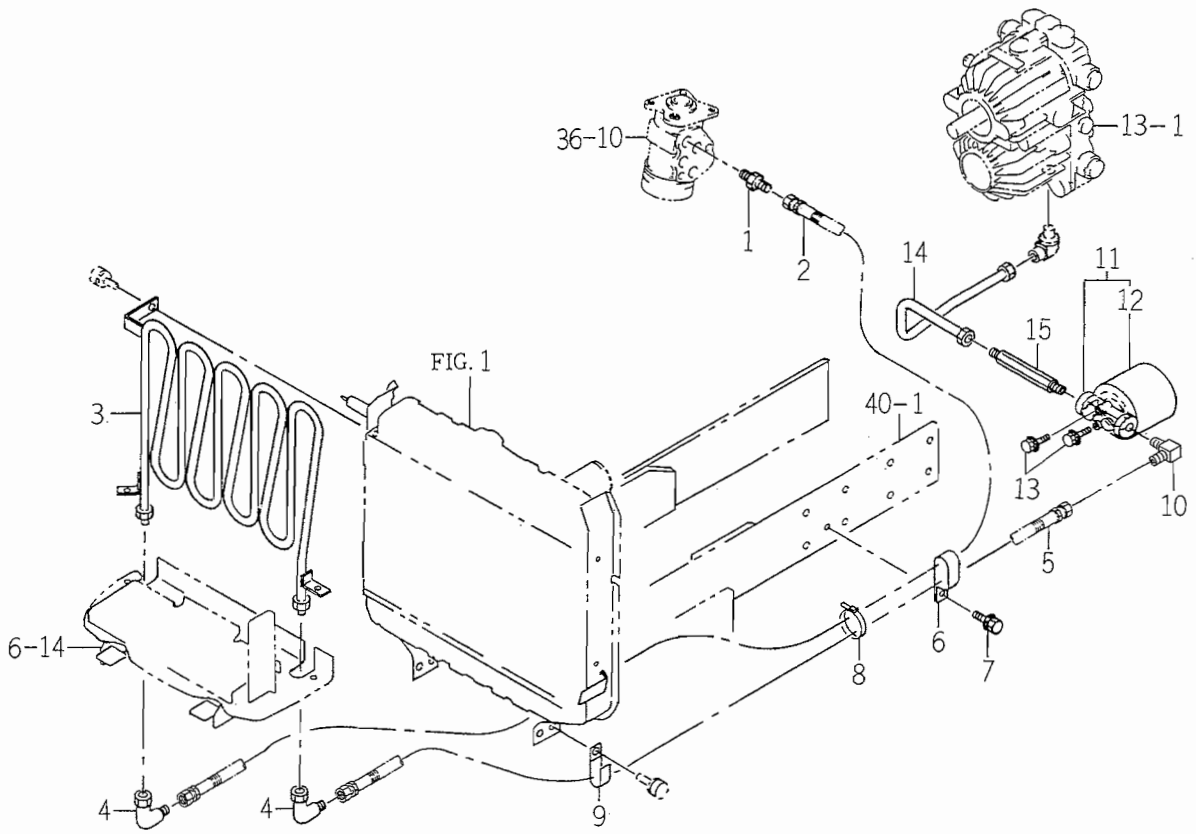

1688-273

KEY	PART CODE	DESCRIPTION	QTY	TYPE OF MODEL TMG18		ITC	COL	GRP	REMARKS
1	1683 - 273 - 590 - 00	ADAPTER/HOSE/PF1/4	1	*					
2	1683 - 273 - 570 - 10	HOSE/1350 ASSY	1	*					
3	1683 - 273 - 630 - 10	COOLER/OIL COMP	1	*					
4	1683 - 273 - 058 - 00	ADAPTER/HOSE/L/12	2	*					
5	1683 - 273 - 570 - 10	HOSE/1350 ASSY	1	*					
6	1444 - 101 - 016 - 10	CLAMP,RADIATOR HOSE	1	*					
7	V211 - 360 - 801 - 60	BOLT,SEMS (SP)	1	*					
8	1342 - 402 - 006 - 00	BAND,WIRE/250	2	*					
9	1425 - 621 - 004 - 00	CLAMP,HARNESS	1	*					
10	1683 - 273 - 054 - 00	ELBOW/1/4 - PT3/8	1	*					
11	3667 - 354 - 220 - 10	FILTER ASSY	1	*					
12	3667 - 354 - 240 - 00	CARTRIDGE/80 ASSY	1	*					
13	V211 - 360 - 801 - 60	BOLT,SEMS (SP)	2	*					
14	1683 - 273 - 520 - 30	PIPE/B2 COMP	1	*					
15	1683 - 273 - 057 - 20	ADAPTER/PT3/8	1	*					

FIG. 31 DIFFERENTIAL GEAR SYSTEM

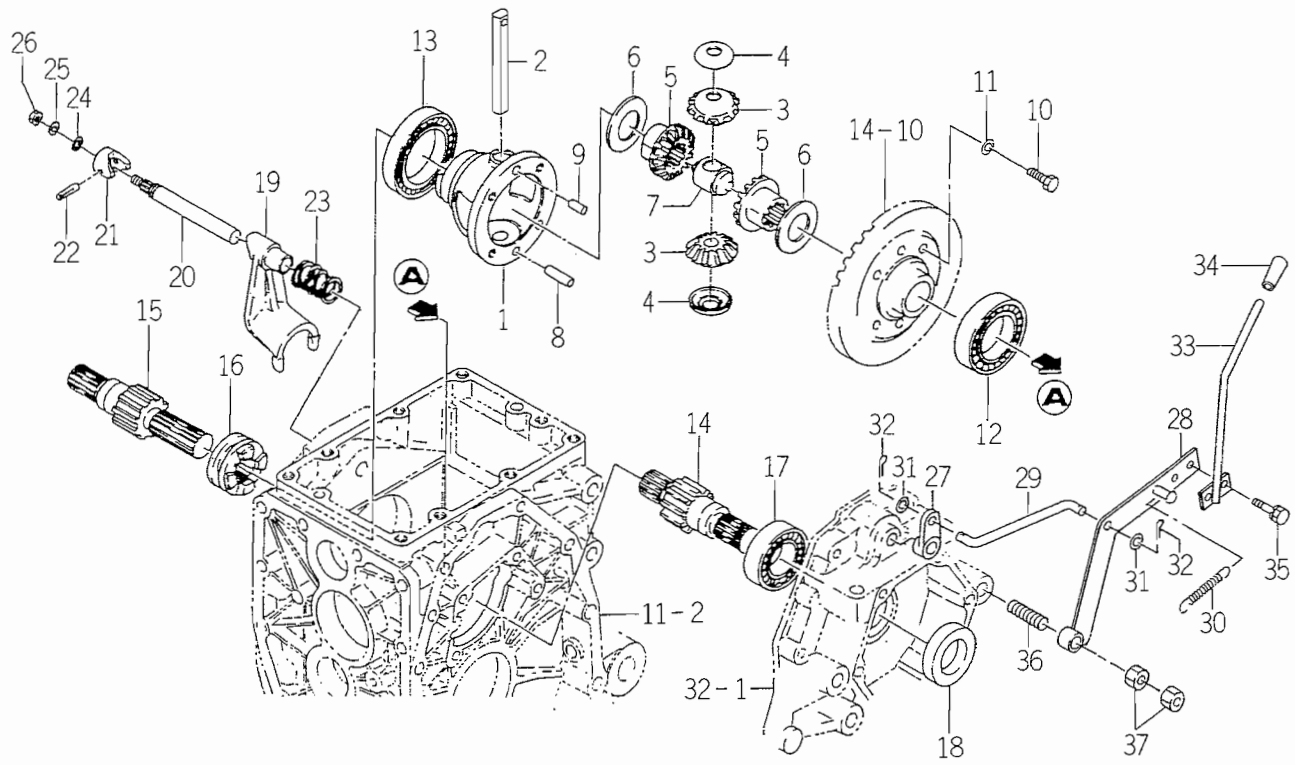

1683-301

KEY	PART CODE	DESCRIPTION	QTY	TYPE OF MODEL TMG18		ITC	COL	GRP	REMARKS
1	1427 - 301 - 002 - 20	CASE,DIFF	1	*					
2	1444 - 411 - 006 - 00	SHAFT,DIFF. PINION	1	*					
3	1427 - 301 - 004 - 00	PINION,DIFF/12T	2	*					
4	1427 - 301 - 005 - 00	COLLAR,PINION THRUST	2	*					
5	1427 - 301 - 006 - 00	GEAR,DIFF - SIDE/14T	2	*					
6	1427 - 301 - 007 - 00	COLLAR,THRUST	2	*					
7	1427 - 301 - 009 - 00	HOLDER,PINION SHAFT	1	*					
8	1672 - 301 - 002 - 00	PIN	1	*					
9	V522 - 100 - 801 - 60	PIN	1	*					
10	1544 - 304 - 006 - 10	BOLT/M8X25	4	*					
11	V401 - 160 - 008 - 00	WASHER,SP/M 8	4	*					
12	V600 - 110 - 600 - 90	BEARING,RB/6009	1	*					
13	V600 - 110 - 601 - 00	BEARING,RB/6010	1	*					
14	1427 - 301 - 011 - 10	PINION,WHEEL/11.L	1	*					
15	1427 - 301 - 012 - 10	PINION,WHEEL/11.R	1	*					
16	1427 - 301 - 013 - 10	CLUTCH,DIFF - LOCK	1	*					
17	V600 - 110 - 620 - 60	BEARING,RB/6206	2	*					
18	V744 - 130 - 450 - 80	SEAL,OIL/TC30458	2	*					
19	1427 - 301 - 014 - 10	FORK/SHIFT/DIFFLOCK	1	*					
20	1427 - 301 - 015 - 00	STAY,SHIFTER	1	*					
21	1427 - 301 - 016 - 00	CAM,DIFF - LOCK	1	*					
22	V530 - 240 - 502 - 40	PIN/SLITTED	1	*					
23	1427 - 301 - 018 - 00	SPRING,PRESS/40	1	*					
24	V720 - 102 - 401 - 00	O - RING/P10A	1	*					
25	V401 - 160 - 010 - 00	WASHER,SP/M10	1	*					

FIG. 31 DIFFERENTIAL GEAR SYSTEM

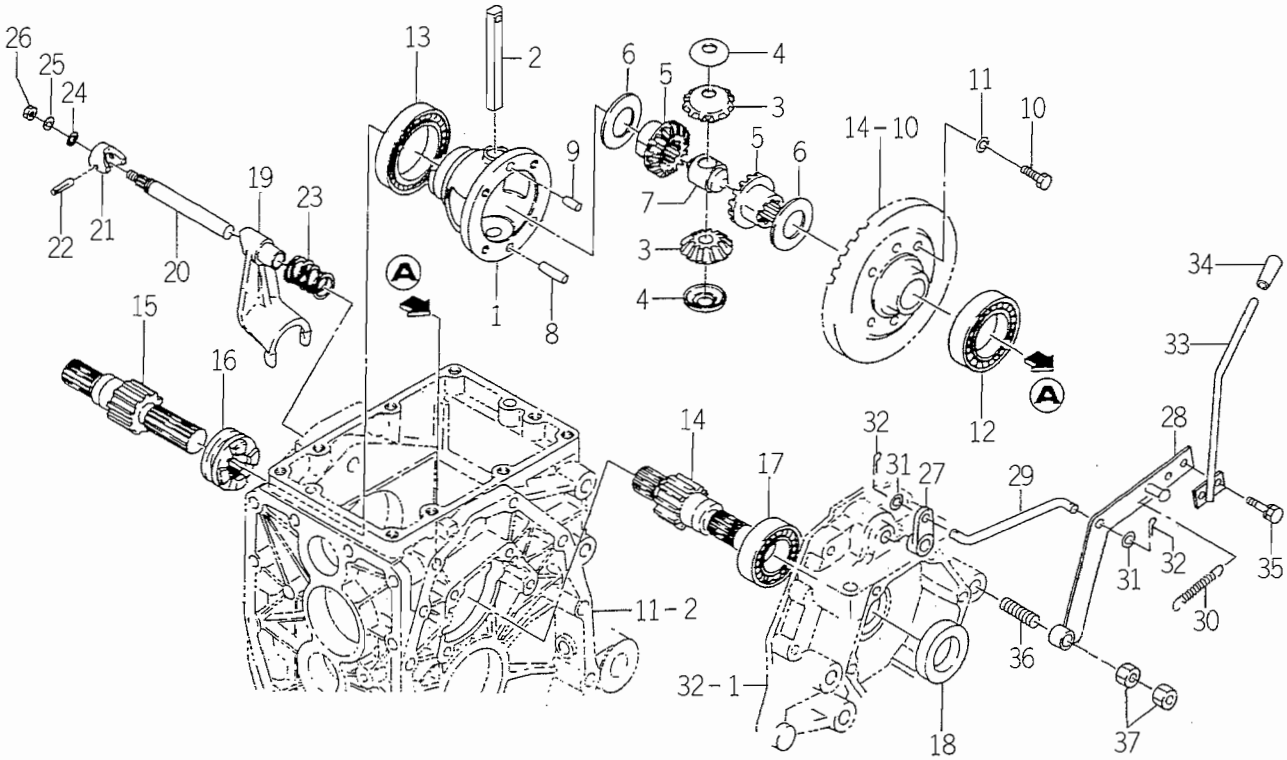

1683-301

KEY	PART CODE	DESCRIPTION	QTY	TYPE OF MODEL TMG18		ITC	COL	GRP	REMARKS
26	V304 - 260 - 010 - 00	NUT	1	*					
27	1427 - 301 - 019 - 00	ARM/DIFFLOCK	1	*					
28	1683 - 301 - 500 - 00	ARM/DIFFROCK COMP	1	*					
29	1672 - 301 - 001 - 00	ROD/130	1	*					
30	1427 - 301 - 021 - 00	SPRING,TENSION/121	1	*					
31	V411 - 260 - 008 - 00	WASHER,PL/M 8	2	*					
32	V500 - 162 - 002 - 00	PIN,SPLIT/2 X20	2	*					
33	1683 - 301 - 510 - 00	LEVER/DIFFLOCK COMP	1	*					
34	2101 - 230 - 001 - 00	KNOB	1	*					
35	V211 - 260 - 802 - 00	BOLT,SEMS (S)	2	*					
36	V251 - 261 - 203 - 50	STUD/M12X35	1	*					
37	V305 - 260 - 012 - 00	NUT/M12	2	*					

FIG. 32 REAR AXLE SYSTEM

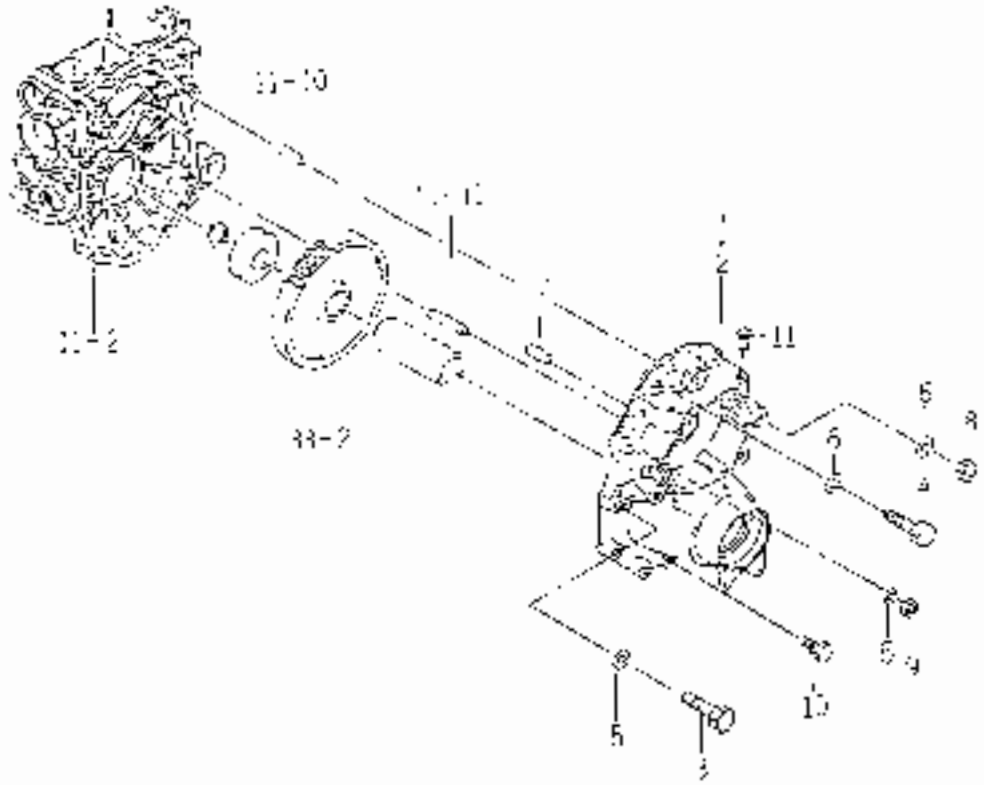

KEY	PART CODE	DESCRIPTION	QTY	TYPE OF MODEL TM016				REMARKS
1	1582 - 308 - 001 - 00	HOUSING/AXLE/REAR/LH	1	•				
2	1582 - 308 - 002 - 00	HOUSING AXLE/REAR/RH	1	•				
3	V201 - 261 - 205 - 00	BOLT/M12X50	10	•				
4	V201 - 201 - 004 - 50	BOLT/M10X45	4	•				
5	V431 - 180 - 012 - 00	WASHER/V12	17	•				
6	V431 - 100 - 012 - 00	WASHER/V12	5	•				
7	V522 - 100 - 801 - 80	PIN	4	•				
8	V304 - 260 - 012 - 00	NUT	4	•				
9	V304 - 160 - 012 - 00	NUT/V12	2	•				
10	7955 - 201 - 026 - 00	PLUG/BRAKE/V40	2	•				
11	1427 - 201 - 012 - 00	CAP/BLANK/V12	2	•				

FIG. 33 WHEEL SHAFT AND REAR WHEEL (TURF) SYSTEM

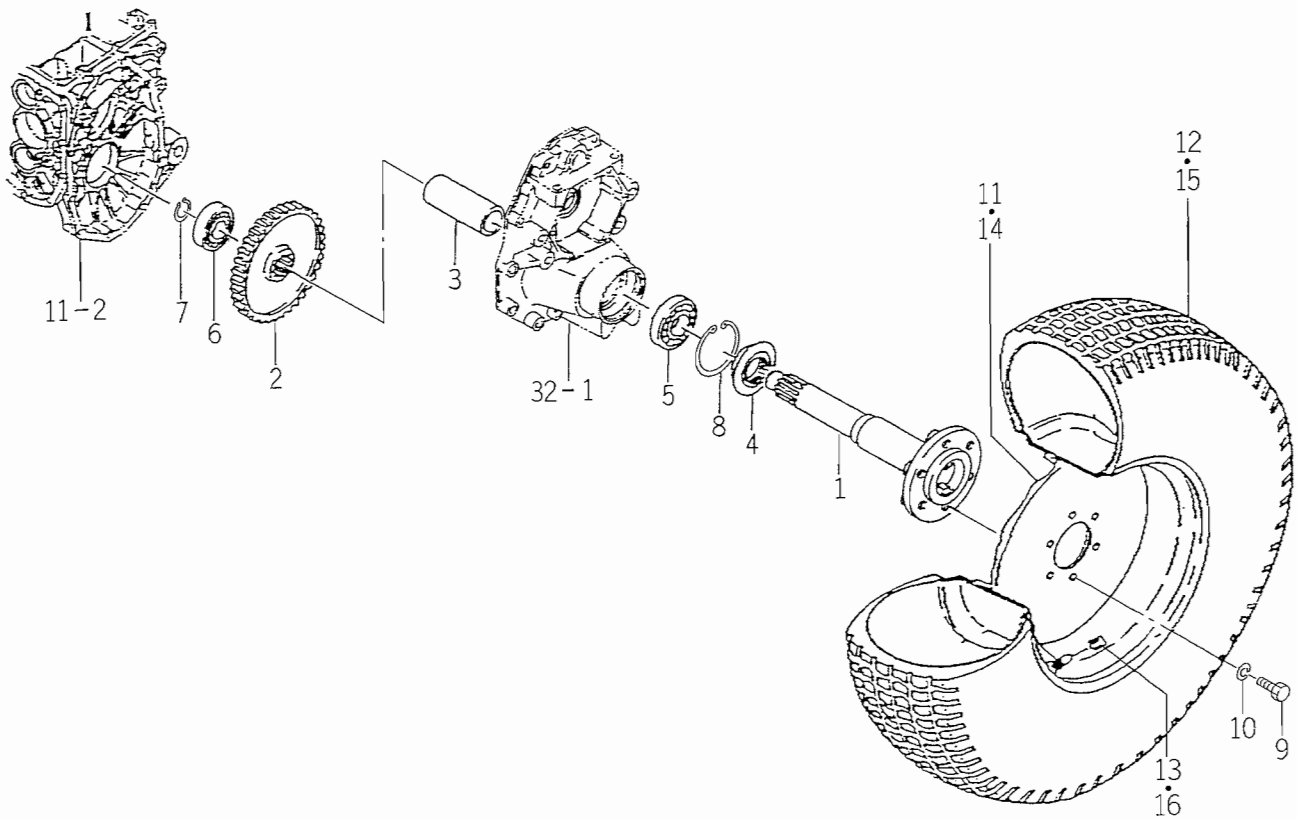

1600-307A

KEY	PART CODE	DESCRIPTION	QTY	TYPE OF MODEL TMG18		ITC	COL	GRP	REMARKS
1	1682 - 307 - 001 - 10	SHAFT/WHEEL	2	*					
2	1427 - 307 - 002 - 10	GEAR,WHEEL/58	2	*					
3	1427 - 307 - 003 - 00	PIPE/123	2	*					
4	1491 - 307 - 201 - 00	SEAL,OIL/QLF488011.5	2	*					
5	V600 - 110 - 630 - 60	BEARING,RB/6306	2	*					
6	V600 - 110 - 620 - 80	BEARING,RB/6208	2	*					
7	V704 - 140 - 030 - 00	RING,SNAP/30 C	2	*					
8	V707 - 140 - 080 - 00	RING/SNAP	2	*					
9	V201 - 361 - 202 - 50	BOLT/M12X25	12	*					
10	V401 - 160 - 012 - 00	WASHER,SP/M12	12	*					
11	1434 - 317 - 290 - 01	WHEEL/15X10LB COMP	1	*			6G		
12	1434 - 317 - 281 - 00	TIRE,TURF29X12.00X15	1	*					
13	V999 - 200 - 003 - 00	CAP,TIRE VALVE	1	*					
14	1434 - 317 - 290 - 01	WHEEL/15X10LB COMP	1	*			6G		
15	1434 - 317 - 281 - 00	TIRE,TURF29X12.00X15	1	*					
16	V999 - 200 - 003 - 00	CAP,TIRE VALVE	1	*					

FIG. 34 HST BRAKE SYSTEM

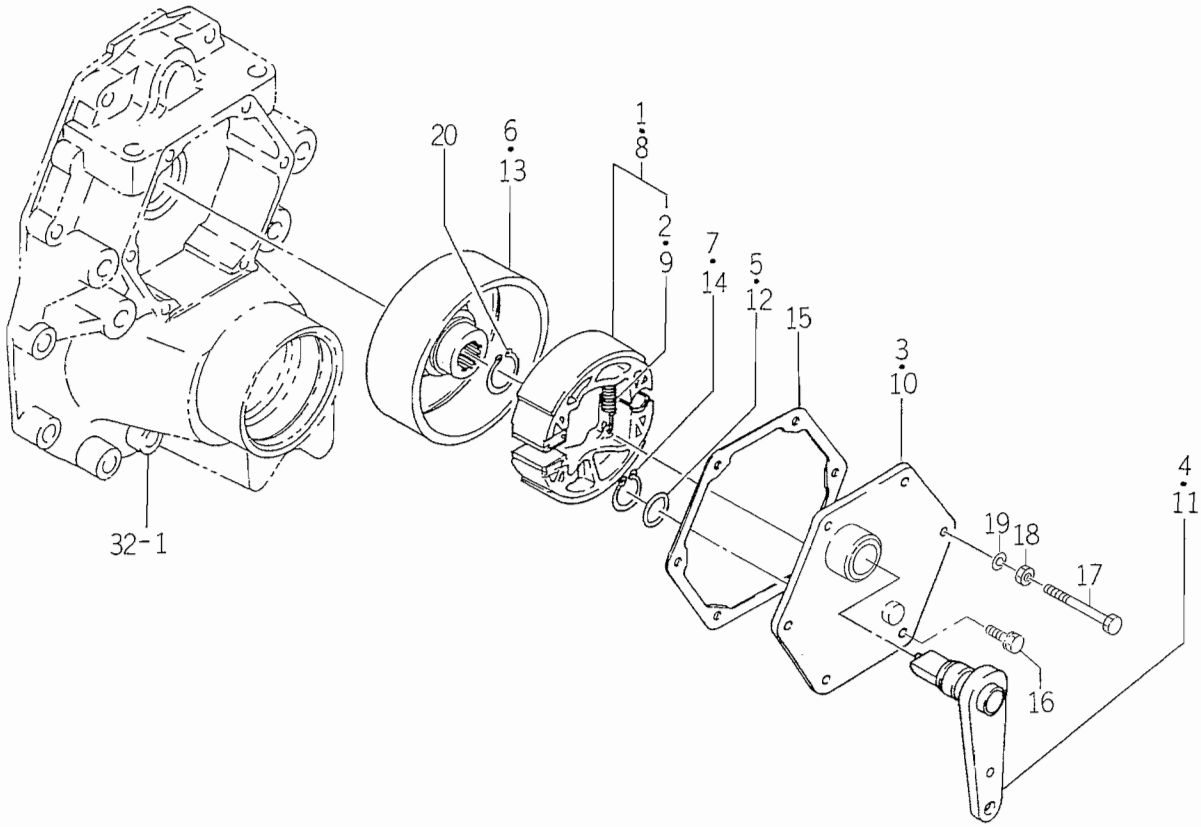

1683-310

KEY	PART CODE	DESCRIPTION	QTY	TYPE OF MODEL TMG18		ITC	COL	GRP	REMARKS
1	1434 - 310 - 220 - 00	BRAKE/SHOE ASSY	1	*					
2	1427 - 310 - 001 - 00	SPRING,TENSION	2	*					
3	1427 - 310 - 220 - 10	COVER,BRAKE	1	*					
4	1427 - 310 - 230 - 00	PIN/BRAKE CAM/L COMP	1	*					
5	V720 - 102 - 401 - 80	O - RING/P18	1	*					
6	1427 - 310 - 003 - 10	DRUM/BRAKE	1	*					
7	V704 - 140 - 022 - 00	RING,SNAP/22 C	1	*					
8	1434 - 310 - 220 - 00	BRAKE/SHOE ASSY	1	*					
9	1427 - 310 - 001 - 00	SPRING,TENSION	2	*					
10	1427 - 310 - 220 - 10	COVER,BRAKE	1	*					
11	1427 - 310 - 270 - 00	PIN/BRAKE CAM/R COMP	1	*					
12	V720 - 102 - 401 - 80	O - RING/P18	1	*					
13	1427 - 310 - 003 - 10	DRUM/BRAKE	1	*					
14	V704 - 140 - 022 - 00	RING,SNAP/22 C	1	*					
15	1427 - 310 - 002 - 10	PACKING/COVER BRAKE	2	*					
16	V211 - 260 - 802 - 00	BOLT,SEMS (S)	11	*					
17	1688 - 310 - 001 - 00	BOLT/M8X80	1	*					
18	V304 - 260 - 008 - 00	NUT/M 8	1	*					
19	V401 - 160 - 008 - 00	WASHER,SP/M 8	1	*					
20	V704 - 140 - 025 - 00	RING,SNAP/25 C	2	*					

FIG. 35 BRAKE SYSTEM

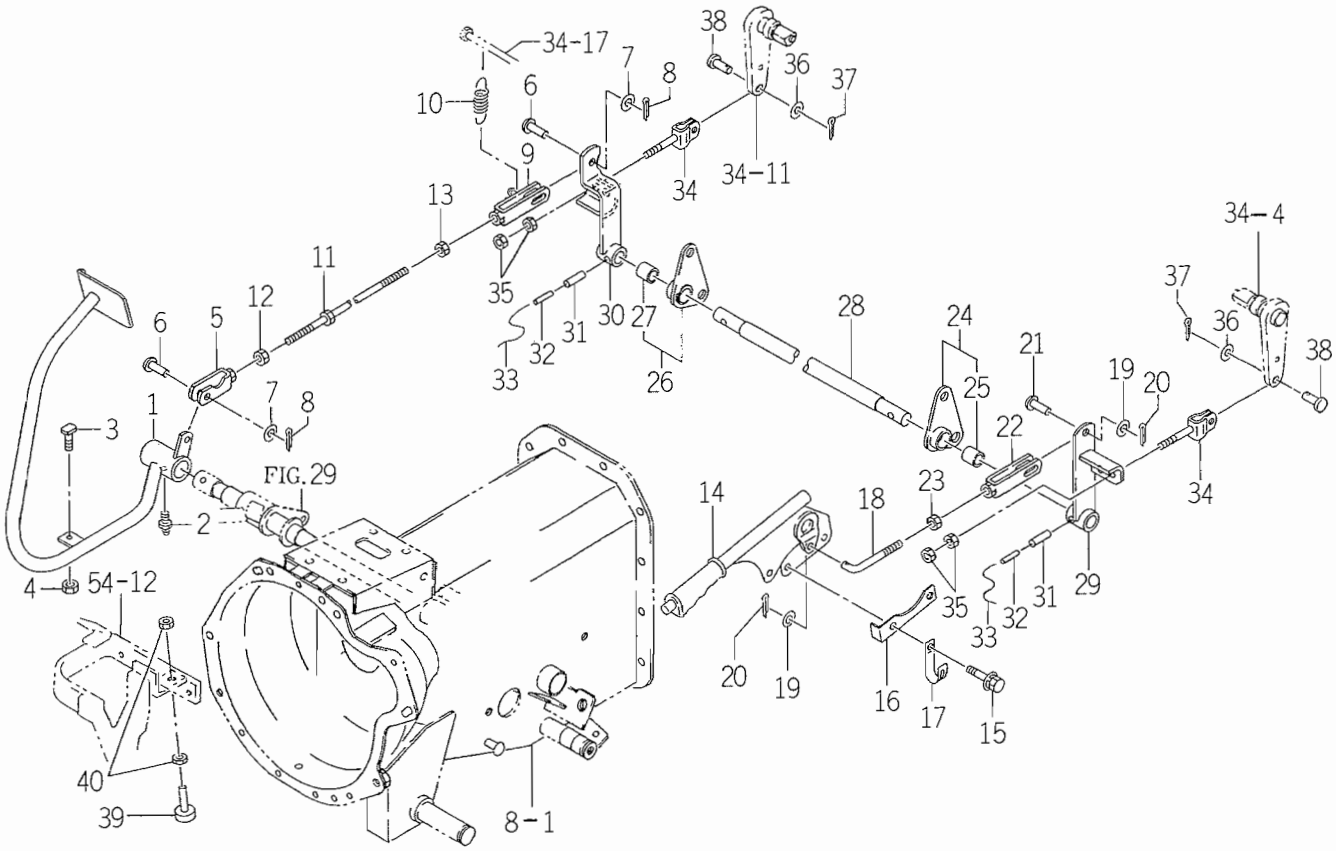

1688-312

KEY	PART CODE	DESCRIPTION	QTY	TYPE OF MODEL TMG18		ITC	COL	GRP	REMARKS
1	1688 - 312 - 510 - 20	PEDAL/BRAKE COMP	1	*					
2	V763 - 150 - 000 - 00	NIPPLE,GREASE/PT1/8	1	*					
3	1688 - 312 - 001 - 00	BOLT/ADJUST	1	*					
4	V304 - 260 - 008 - 00	NUT/M 8	1	*					
5	1415 - 312 - 500 - 00	YOKE,LH	1	*					
6	1404 - 312 - 006 - 00	PIN,YOKE A	2	*					
7	V411 - 260 - 008 - 00	WASHER,PL/M 8	2	*					
8	V500 - 162 - 002 - 00	PIN,SPLIT/2 X20	2	*					
9	1683 - 312 - 580 - 00	FORK/BRAKE COMP	1	*					
10	1560 - 404 - 002 - 30	SPRING	1	*					
11	1683 - 312 - 570 - 00	ROD/BRAKE COMP	1	*					
12	1560 - 132 - 007 - 30	NUT/M8	1	*					
13	V304 - 260 - 008 - 00	NUT/M 8	1	*					
14	1682 - 312 - 260 - 00	LEVER/PARKING COMP	1	*					
15	V211 - 360 - 802 - 50	BOLT,SEMS	2	*					
16	1683 - 312 - 002 - 00	STOPPER/PARKING	1	*					
17	1425 - 621 - 004 - 00	CLAMP,HARNESS	1	*					
18	1683 - 312 - 003 - 00	ROD/80	1	*					
19	V411 - 260 - 008 - 00	WASHER,PL/M 8	2	*					
20	V500 - 162 - 002 - 00	PIN,SPLIT/2 X20	2	*					
21	1404 - 312 - 006 - 00	PIN,YOKE A	1	*					
22	1510 - 328 - 260 - 00	YOKE COMP	1	*					
23	V304 - 260 - 008 - 00	NUT/M 8	1	*					
24	1682 - 312 - 300 - 00	HOLDER/SHAFT/LH ASSY	1	*					
25	3668 - 612 - 001 - 00	BUSH	1	*					

FIG. 35 BRAKE SYSTEM

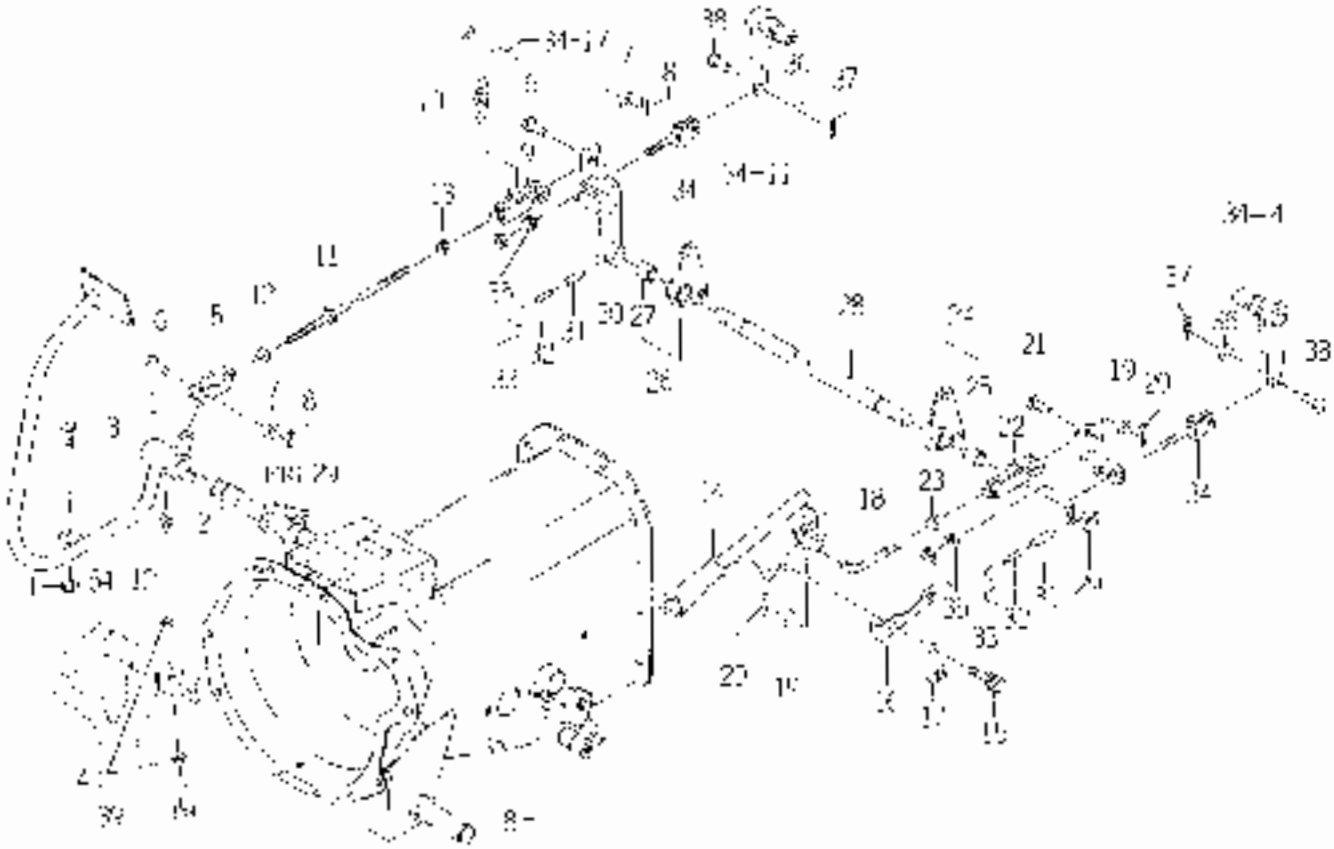

KEY	PART CODE	DESCRIPTION	QTY	TYPE OF MODEL TW015	ITC	COC	GDP	REMARKS
26	1682 - 312 - 3[illegible]0 - 00	HOLDER/SHAFT/FL ASSY	1					
27	3006 - 012 - 001 - 00	DUST	[illegible]					
28	1682 - 312 - 004 - 0[illegible]	SHAFT/PARKING	[illegible]					
29	1600 - 312 - 550 - 30	ARM/PARKING/LH COMP	[illegible]					
30	1683 - 312 - 560 - 10	ARM/PARKING/RH COMP	1					
31	V550 - 140 - 802 - 00	PIN/PARKING 8 X28 W	2					
32	V550 - 140 - 502 - 00	PIN/PARKING 8 X25 W	2					
33		WIRE	2					
34	1568 - 132 - 200 - 00	ROD COMP	2					
35	V304 - 250 - 006 - 00	NUT M 8	4					
36	V411 - 260 - 006 - 00	WASHER/PL M 8	2					
37	V500 - 162 - 002 - 00	PIN/COTT/2 X22	2					
38	1432 - 742 - 001 - 00	PIN	2					
39	1421 - 602 - 005 - 10	CUSHION/ RUBBER	1					
40	V304 - 280 - 008 - 00	NUT M 8	2					

FIG. 36 STEERING SYSTEM

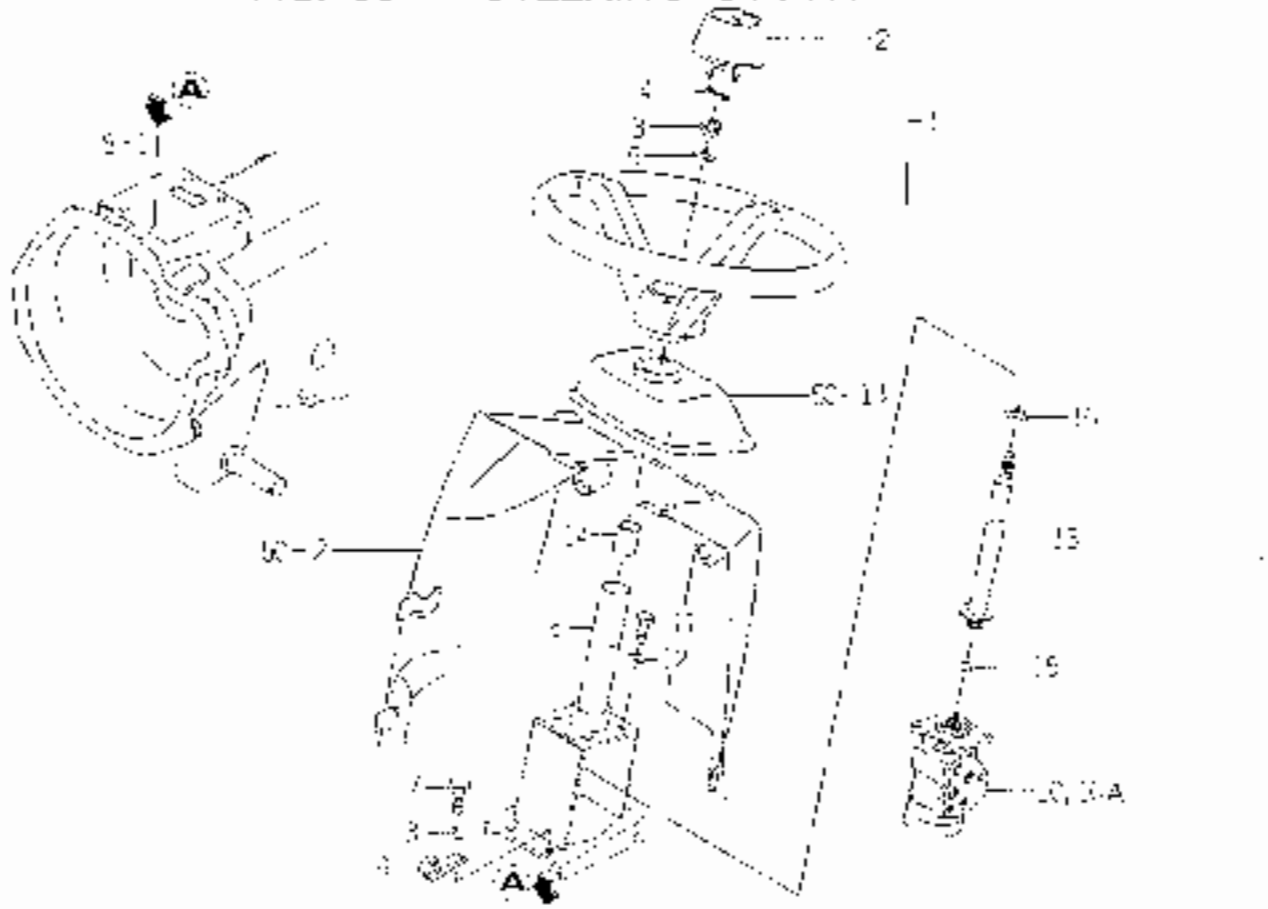

KEY	PART CODE	DESCRIPTION	QTY	TYPE OF MODEL				REMARKS
1	1653 - 407 - 720 - 00	WHEEL STEERING ASSY	1					
2	1056 407 222 00	CAP	1					
3	V379 - [illegible] - 0 - 00	NUT	1					
4	V500 162 007 00	PIN/SPLIT/2 X 20	1					
5	V411 200 0 0 00	WASHER/M10	1					
6	1082 - 407 - 200 - 10	BASE/STEERING COMP	1					
7	V203 361 002 00	BOLT-MIXX 25X20	2					
8	V401 - 160 - 010 - 00	WASHER/SP/M12	4					
9	3737 - 172 - 011 - 00	CLAMP/HARNESS	2					
10	1672 - 407 - 720 - 00	CONTROLLER/STEERING	1					
10A	1032 - 407 - 720 - 00	CONTROLLER STEERING	1					
11	V203 261 007 00	BOLT-MIXX20	3					
12	V401 160 010 00	WASHER-/M10	3					
13	1082 - 407 - 210 - 10	SHAFT/STEERING/COMP	1					
14	1456 408 201 - 10	BUSH-[illegible]	1					
15	V720 - 102 - 402 - 00	O-RING/P20	1					
16	V720 104 407 00	O-RING/P26	1					

FIG. 37 CYLINDER SYSTEM

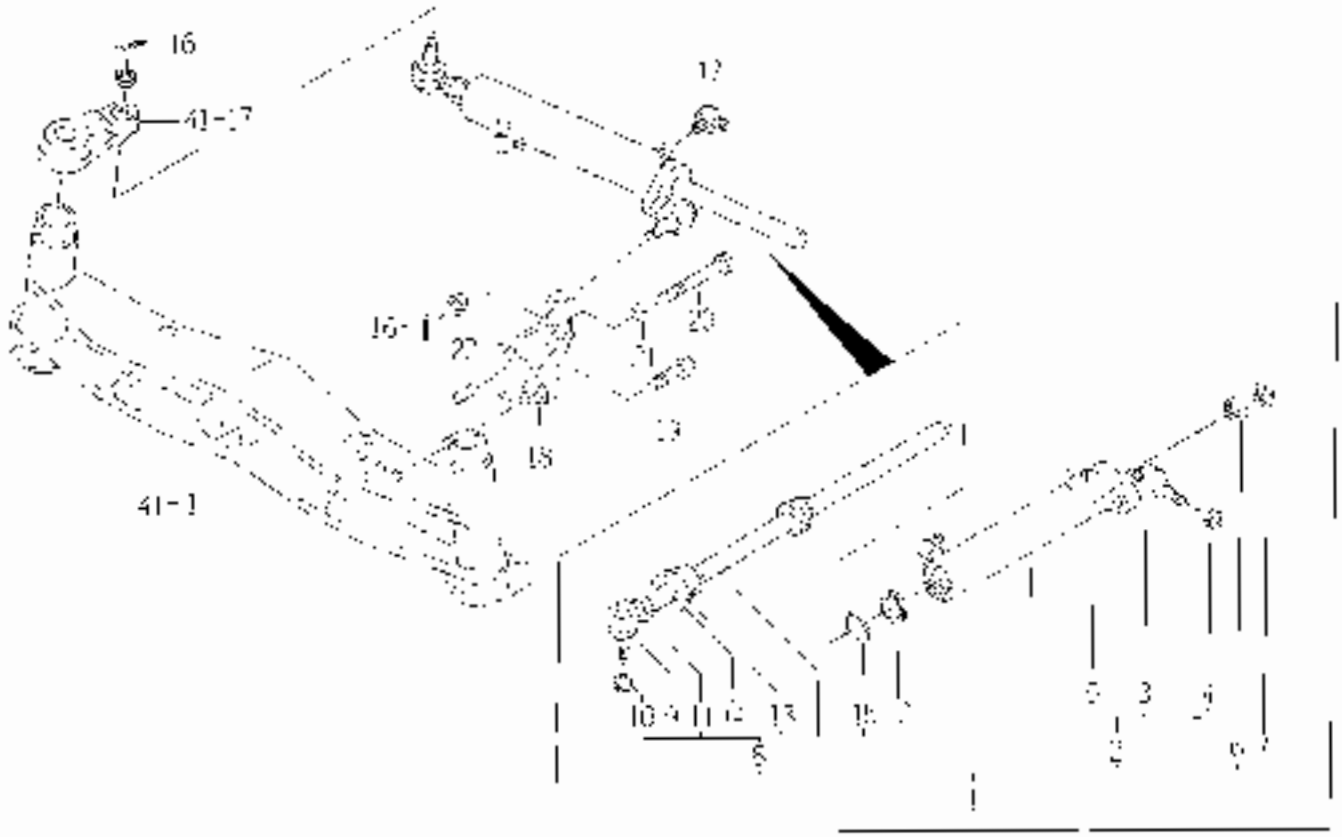

KEY	PART CODE	DESCRIPTION	QTY	TYPE OF MODEL / INDIS	TC	CC	GRP	REMARKS
1	1082 403 200 - 30	CYLINDER HEAD ASSY						
2	1082 403 220 - 30	CYLINDER COVER						
3	1404 - 402 - 001 - 00	COVER/DUST						
4	1404 402 002 00	NUT/SLOTTED						
5	1427 433 241 00	NIPPLE/GREASE/PT1/8	1					
6	1185 031 302 00	SEAL/ROD	1					
7	1185 - 031 - 303 - 00	SEAL/DUST						
8	1082 403 250 - 30	ROD/PISTON ASSY	1					
9	1404 - 402 001 - 00	COVER/DUST						
10	1404 - 402 002 - 00	NUT/SLOTTED	1					
11	1427 433 241 00	NIPPLE/GREASE/PT1/8						
12	1672 - 403 - 003 - 00	PACKING/PISTON						
13	1185 031 307 - 00	SEAL/ROD	1					
14	1185 - 031 - 308 - 00	SEAL/DUST	1					
15	V120 118 502 - 90	RING/O	1					
16	V500 161 002 50	PIN/SPLIT/2 X 25	2					
17	3766 165 002 - 10	ADAPTER (90 - 2 HOLE)	2					
18	1682 - 403 - 001 30	STAY/CYLINDER	1					
19	V211 - 531 - 003 50	BOLT/S	2					
20	V201 301 008 50	BOLT						
21	V401 160 010 - 00	WASHER/SPRING						
22	V523 101 - 002 - 40	PIN	2					

FIG. 38 PIPING SYSTEM (EXCEPT S TYPE)

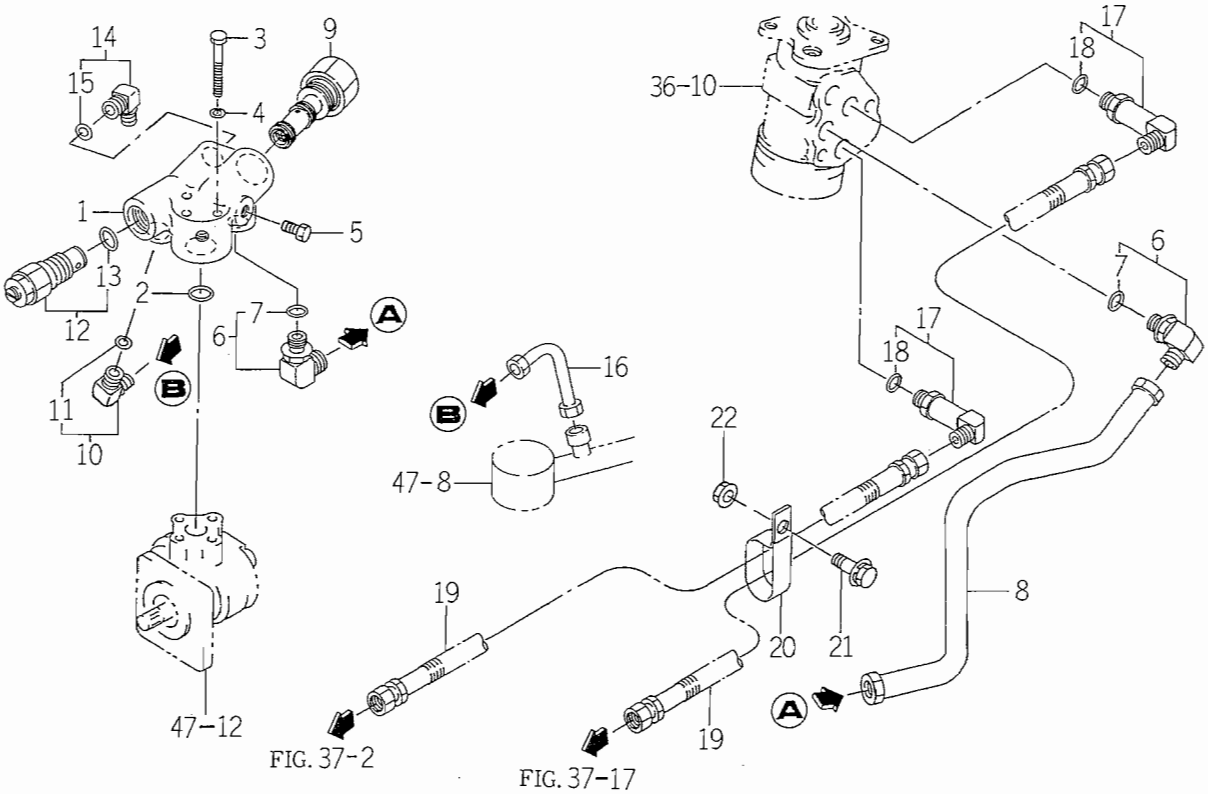

1688-408

KEY	PART CODE	DESCRIPTION	QTY	TYPE OF MODEL TMG18		ITC	COL	GRP	REMARKS
1	1688 - 408 - 001 - 00	METAL/U	1	*					
2	V720 - 112 - 402 - 00	O - RING/P20	1	*					
3	V200 - 260 - 605 - 50	BOLT/M 6X55	3	*					
4	V401 - 160 - 006 - 00	WASHER,SP/M 6	3	*					
5	1326 - 706 - 002 - 10	PLUG,DRAIN	2	*					
6	1672 - 408 - 210 - 00	ADAPTER/L/PF1/4 ASSY	2	*					
7	V720 - 112 - 401 - 10	RING/O	2	*					
8	1672 - 408 - 200 - 00	PIPE/U COMP	1	*					
9	K233 - 003 - 000 - 00	VALVE/FLOCON ASSY	1	*					FIG 078
10	1683 - 273 - 640 - 00	ADAPTER/L/PF3/8 ASSY	1	*					
11	V720 - 112 - 401 - 40	O - RING/P14	1	*					
12	K250 - 018 - 000 - 00	VALVE, RELIEF ASSY	1	*					
13	V720 - 112 - 402 - 00	O - RING/P20	1	*					
14	P117 - 501 - 250 - 00	ELBOW ASSY	1	1-131					
15	V720 - 112 - 401 - 40	O - RING/P14	1	1-131					
16	1688 - 408 - 200 - 10	PIPE/RELIEF COMP	1	*					
17	P113 - 211 - 330 - 00	ELBOW/90° /L ASSY	2	*					
18	V720 - 112 - 401 - 10	RING/O	2	*					
19	1682 - 408 - 220 - 00	HOSE/DERIVERY ASSY	2	*					
20	1444 - 101 - 016 - 10	CLAMP,RADIATOR HOSE	1	*					
21	V211 - 360 - 802 - 00	BOLT (SP) M8X20	1	*					
22	V362 - 260 - 008 - 00	NUT/WASHER	1	*					

FIG. 39 PIPING SYSTEM (S TYPE)

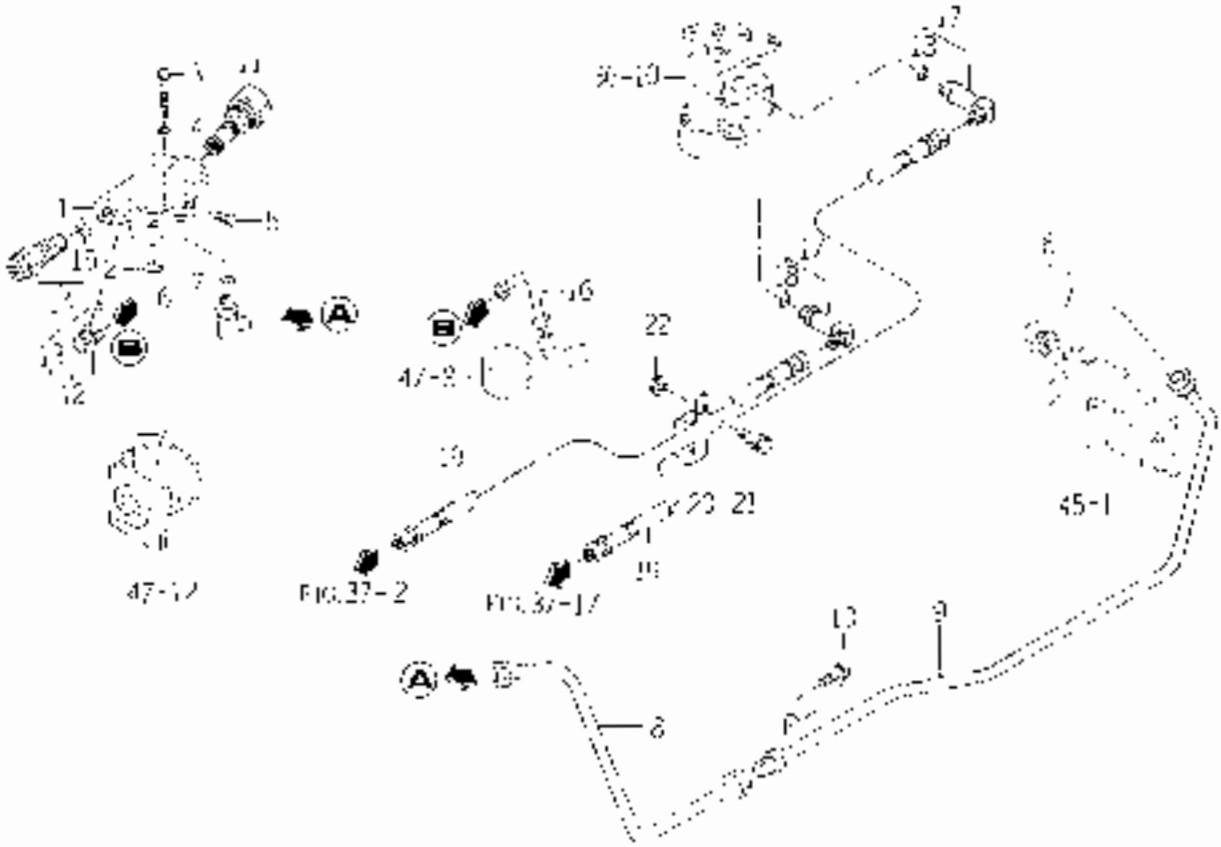

KEY	PART CODE	DESCRIPTION	QTY	TYPE OF MODEL TW319	ITC	COL	GRP	REMARKS
1	1600 - 200 - 001 - 00	MF AI/O	[illegible]	[illegible]				
2	V120 - 112 - 202 - 00	O RING/P20	[illegible]	[illegible]				
3	V200 - 760 - 605 - 50	BOLT/M 6X55	3	[illegible]				
4	V40 - 160 - 006 - 00	WASHER/S/M 6	3	[illegible]				
5	1326 - 706 - 002 - 10	PLUG/DRAIN	2	[illegible]				
6	1672 - 405 - 210 - 00	ADAPTER/T/FEL 4 ASSY	2	[illegible]				
7	V720 - 112 - 401 - 10	RING/O	2	[illegible]				
8	1600 - 408 - 210 - 00	PIPE/VALVE/F CONP	1	[illegible]				
9	1088 - 408 - 220 - 00	PIPE/VALVE/F COVP	1	[illegible]				
10	V211 - 360 - 801 - 50	BOLT/SEMS SM	1	[illegible]				
11	K253 - 008 - 000 - 00	VALVE, FLOOD ASSY	1	[illegible]				FIG.37M
12	1672 - 270 - 640 - 00	ADAPTER/T PF3/8 ASSY	[illegible]	[illegible]				
13	V720 - 112 - 401 - 40	O-RING/P14	[illegible]	[illegible]				
14	K250 - 018 - 000 - 00	VALVE, RELIEF ASSY	[illegible]	[illegible]				
15	V720 - 112 - 402 - 00	O-RING/P20	1	[illegible]				
16	1688 - 400 - 200 - 10	PIPE/RELIEF COMP	1	[illegible]				
17	F113 - 211 - 330 - 00	FLOW/CONTROL ASSY	2	[illegible]				
18	V720 - 112 - 401 - 10	RING/O	2	[illegible]				
19	1032 - 408 - 220 - 00	HOSE/DELIVERY ASSY	2	[illegible]				
20	444 - 101 - 014 - 10	CLAMP/HOSE DELIVERY	1	[illegible]				
21	V211 - 300 - 202 - 00	BOLT (SP) M8X20	1	[illegible]				
22	V382 - 250 - 008 - 00	NUT/WASHER	1	[illegible]				

FIG. 40 AXLE BRACKET AND BUMPER SYSTEM

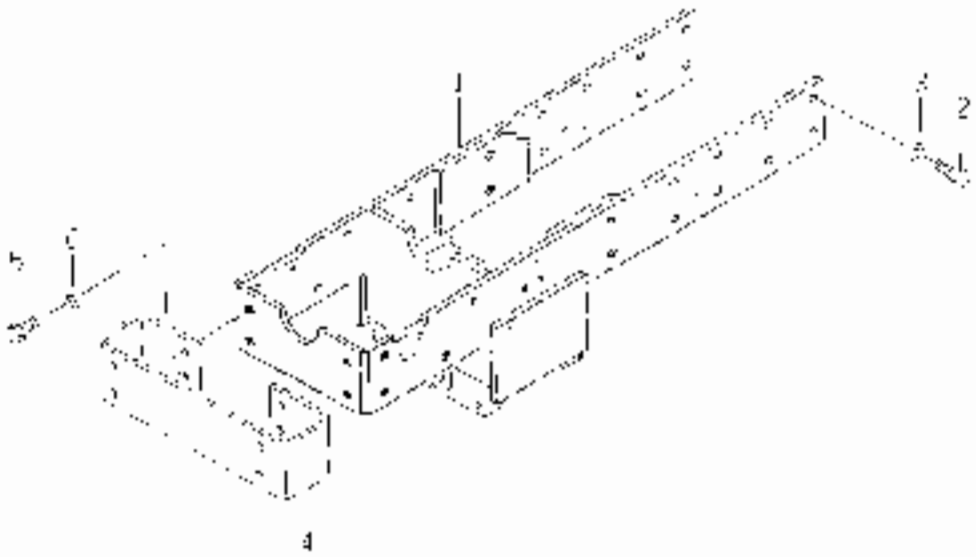

KEY	PART CODE	DESCRIPTION	QTY	TYPE OF MODEL				REMARKS
1	1055 - 410 - 200 - 00	BRACKET/AXLE COMP	1	•				
2	V200 361 002 50	BOLT	15	•				
3	V401 - 160 - 012 - 00	WASHER,SP/M10	5	•				
4	1000 - 410 - 001 - 10	PLATE/BUMPER	1	•				
5	V201 251 - 202 - 50	BOLT M12X25	4	•				
6	V401 150 012 - 00	WASHER,SP M12	4	•				

FIG. 41 2WD AXLE SYSTEM

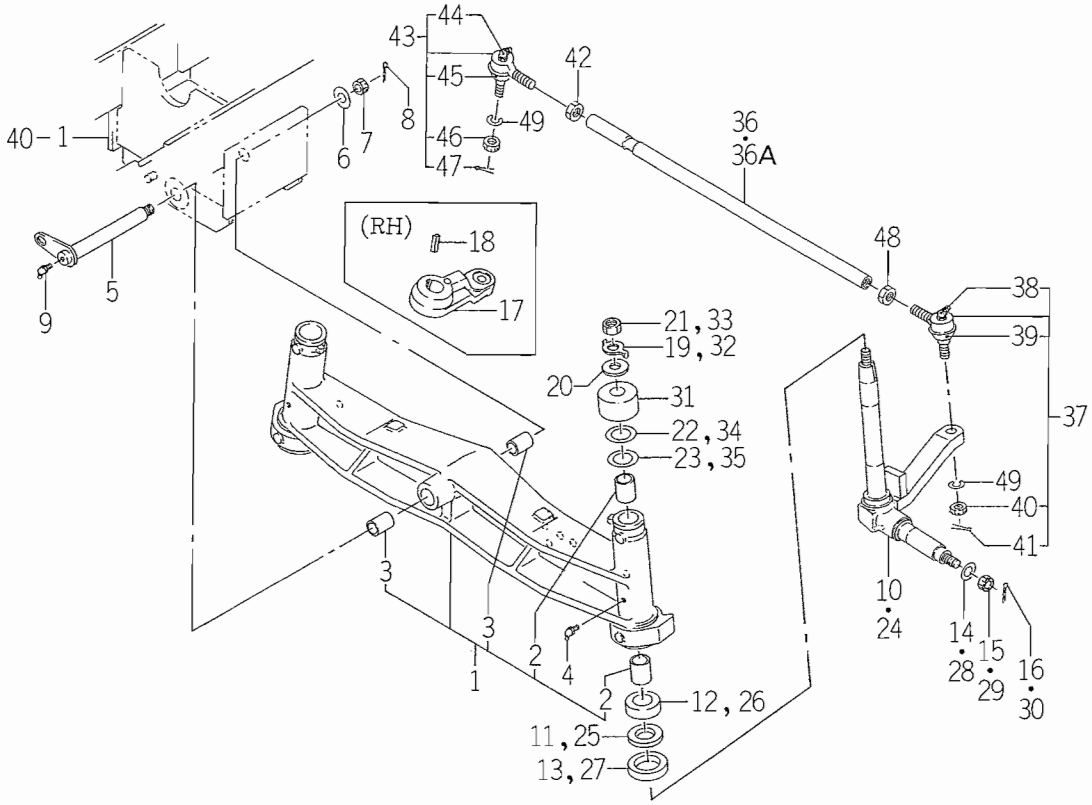

1688-433

KEY	PART CODE	DESCRIPTION	QTY	TYPE OF MODEL TMG18		ITC	COL	GRP	REMARKS
1	1688 - 433 - 240 - 00	AXLE/2WD ASSY	1	*					
2	1411 - 401 - 001 - 00	BUSH/25X29X30	4	*					
3	1427 - 401 - 001 - 00	BUSH/20X24X30	2	*					
4	V760 - 150 - 000 - 00	NIPPLE,GREASE	2	*					
5	1688 - 433 - 200 - 00	PIN/PIVOT COMP	1	*					
6	1427 - 431 - 003 - 00	WASHER/13X32X3	1	*					
7	V327 - 262 - 112 - 00	NUT,CASTTLE/M12X1.25	1	*					
8	V500 - 163 - 002 - 50	PIN,SPLIT/3 X25	1	*					
9	V763 - 150 - 000 - 00	NIPPLE,GREASE/PT1/8	1	*					
10	1688 - 433 - 220 - 10	SPINDLE/RH COMP	1	*					
11	1419 - 403 - 001 - 00	COLLAR/25X42X4	1	*					
12	1681 - 434 - 001 - 00	BEARING/BALL/THRUST	1	*					
13	1682 - 434 - 033 - 00	SEAL/OIL	1	*					
14	3621 - 702 - 003 - 00	WASHER,PULLEY	1	*					
15	V328 - 262 - 112 - 00	NUT/M12X1.25	1	*					
16	V500 - 163 - 002 - 50	PIN,SPLIT/3 X25	1	*					
17	1688 - 433 - 003 - 00	ARM/KNUCKLE/RH	1	*					
18	1326 - 708 - 005 - 00	KEY,ROTARY TOP SHAFT	1	*					
19	1421 - 403 - 007 - 00	WASHER,LOCK/M12	1	*					
20	1421 - 403 - 008 - 00	WASHER/13X35X5	1	*					
21	V304 - 260 - 012 - 00	NUT/M12	1	*					
22	1421 - 951 - 006 - 00	SHIM,A/0.5	2	*					
23	1421 - 951 - 007 - 00	SHIM,A/1.0	2	*					
24	1688 - 433 - 230 - 10	SPINDLE/LH COMP	1	*					
25	1419 - 403 - 001 - 00	COLLAR/25X42X4	1	*					

FIG. 41 2WD AXLE SYSTEM

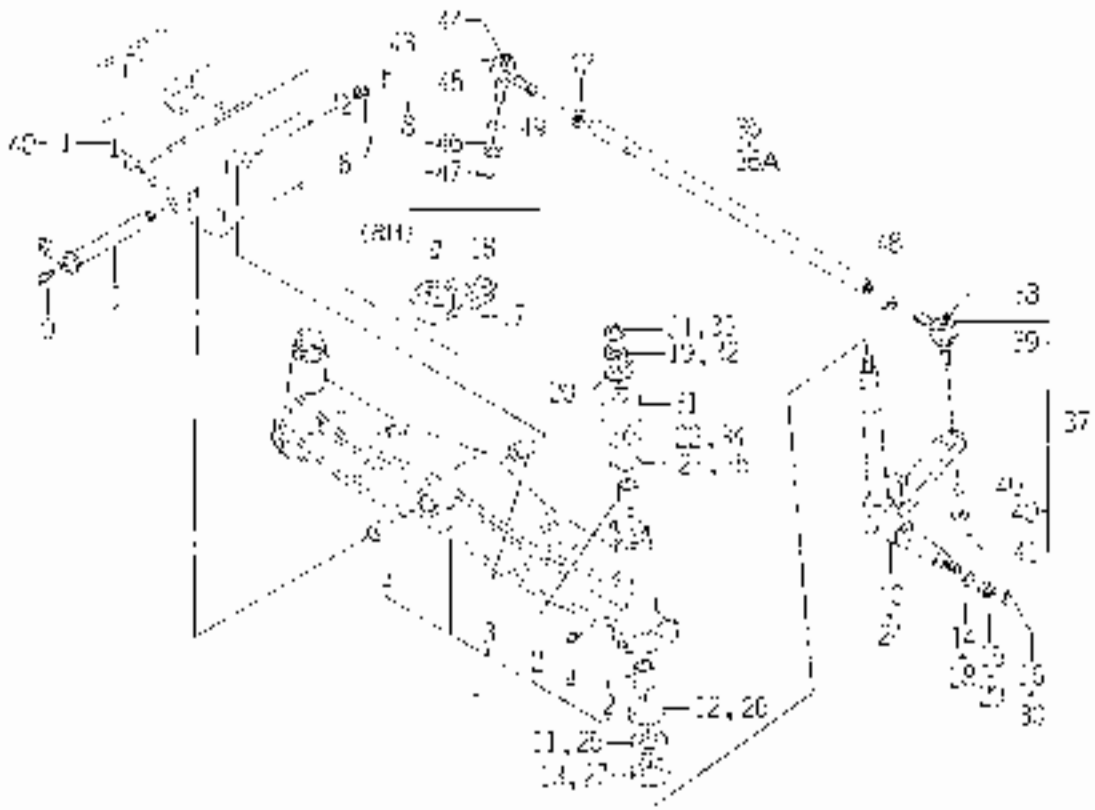

KEY	PART CODE	DESCRIPTION	QTY	TYPE OF MODEL				REMARKS
26	681 - 444 - 001 - 00	BEARING/BAL THRUST	1					
27	1682 434 033 00	SEAL OIL	1					
28	3021 - 702 - 003 - 00	WASHER/BALL	1					
29	V328 262 - 113 - 00	NUT/M12X1.25	1					
30	V500 - 189 - 002 - 50	PIN/SPLIT/8 X35	1					
31	1688 - 433 - 002 - 00	HUB KNUCKLE	1					
32	1421 406 007 00	WASHER/LOCK/V12	1					
33	V304 - 210 - 012 - 00	NUT/V12						
34	1421 - 951 - 000 - 00	SHIM/A/0.5	2					
35	1421 951 007 00	SHIM/A/ 0	2					
36	1333 - 439 - 2 - 00	ROD/TIE	1	131 132				
36A	1333 439 2 10	ROD/TIE	1					
37	1427 - 433 - 240 - 10	JOINT/BALL/LH ASSY	1					
38	1404 402 005 00	NIPPLE/GREASE	1					
39	1427 433 - 025 - 00	COVER/DUST	1					
40	V327 262 110 00	NUT/M10X1.25	1					
41	V500 - 189 - 502 - 50	PIN/SPLIT 2.5X30	1					
42	1427 433 023 00	NUT/LH T-ROD	1					
43	1427 439 250 10	JOINT/BALL RH ASSY	1					
44	1404 - 402 - 006 - 00	NIPPLE/GREASE	1					
45	1427 - 433 - 026 - 00	COVER/DUST	1					
46	V327 - 202 - 110 - 00	NUT/M10X1.25						
47	V500 182 502 50	PIN/SPLIT/2.5X30						
48	1427 - 433 - 022 - 00	NUT/M12						
49	V411 150 010 00	WASHER/SP/M10	2					

FIG. 42 FRONT TIRE SYSTEM

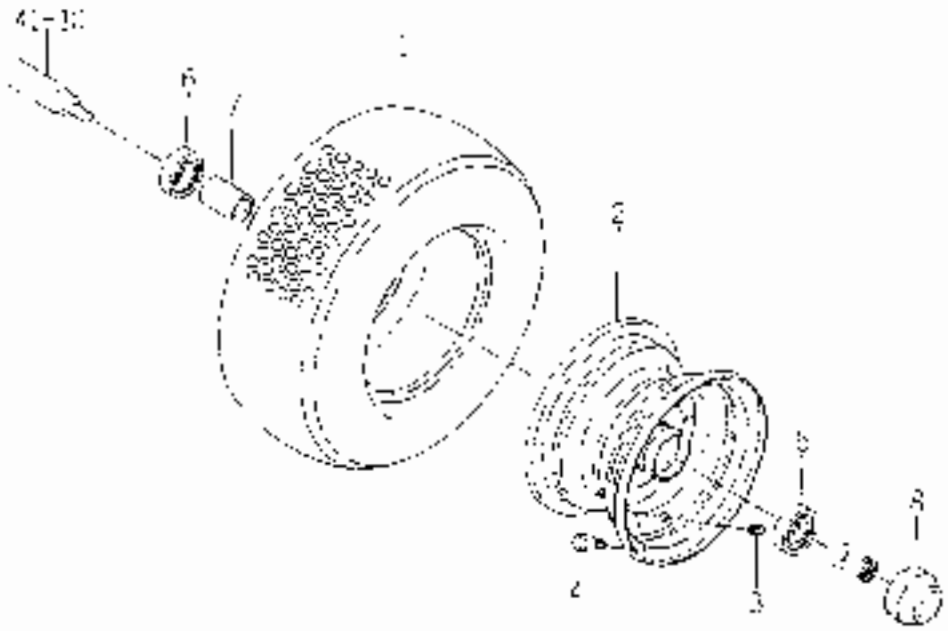

KEY	PART CODE	DESCRIPTION	QTY	TYPE OF MODEL				REMARKS
1	1688 - 440 - 501 - 00	TIRE/TUBE/RD	2					
2	1593 - 411 - 610 - 10	RIM/WHEEL FRONT	2					
3	V889 - 200 - 003 - 00	CAP/TIRE VALVE	2					
4	1380 - 241 - 002 - 00	HUB	2					
5	V600 - 150 - 630 - 40	BEARING/RR 550455	2					
6	V600 - 150 - 620 - 50	BEARING/RD 620355	2					
7	1593 - 411 - 001 - 10	CD AP 26x32x50	2					
8	1590 - 411 - 053 - 20	CAP/WHEE	2					

FIG. 43 PLATE CASE SYSTEM (EXCEPT V TYPE)

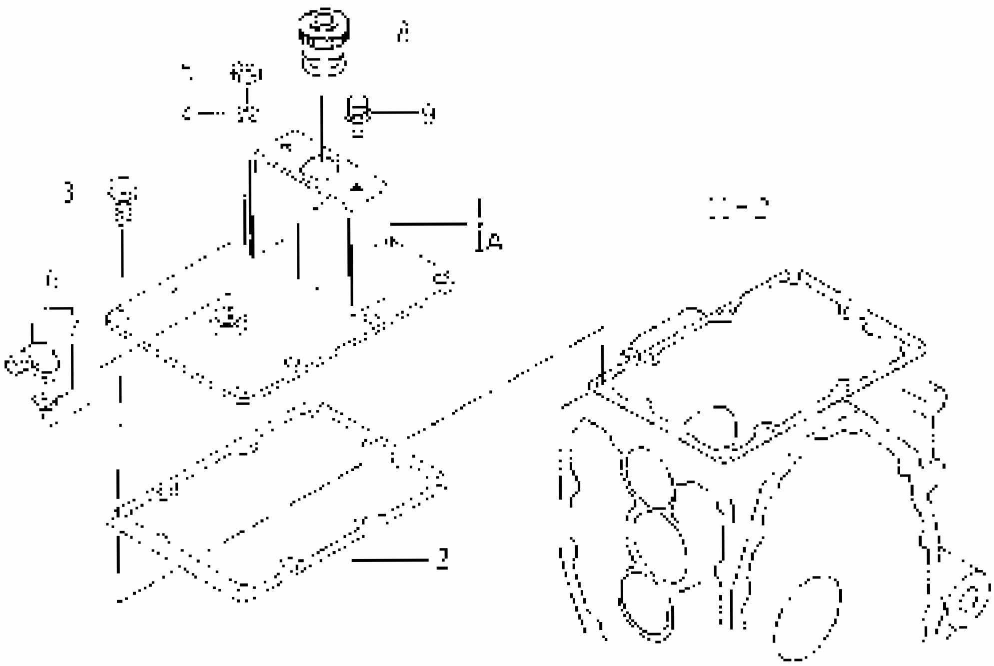

KEY	PART CODE	DESCRIPTION	QTY	TYPE OF MODEL TM23	I T C	C O L	G R P	REMARKS
1	1600-501-210-00	PLATE CASE/FRONT COMP	1					
1A	1688-501-210-10	PLATE/CASE/REAR COMP	1					
2	1600-501-001-00	GASKET	1					
3	V211-261-002-50	BOLT/M10x28	7					
4	V401-160-010-00	WASHER/SP M10	7					
5	V304-460-010-00	NUT/M10	2					
6	P117-501-250-00	ELBOW ASSY	1					
7	V702-112-401-40	O-RING/P14	1					
8	1614-501-015-10	CAP/OIL/30	1					
9	V211-360-301-60	BOLT/SEMS	3					

FIG. 44 PLATE CASE SYSTEM (V TYPE)

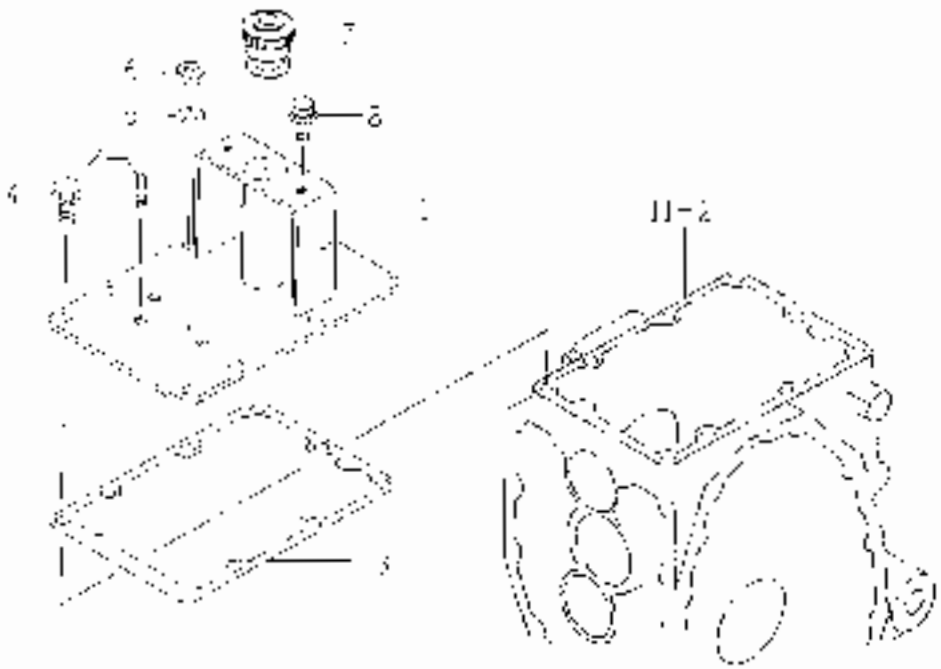

KEY	PART CODE	DESCRIPTION	QTY	TYPE OF MODEL				REMARKS
1	[illegible]	PLATE/CASE/V COMP	1					
2	V25 040 [illegible]	BOLT, STUD/SEAL	3					
3	[illegible]	GASKET	1					
4	V211 [illegible]	BOLT/[illegible]	2					
5	V401 - 00 [illegible]	WASHER/[illegible]	2					
6	V304 - 400 [illegible]	NUT V13	2					
7	[illegible]	CAP/OIL [illegible]	1					
8	V211 - 360 [illegible]	BOLT/[illegible]	3					

FIG. 45 VALVE SYSTEM (S TYPE)

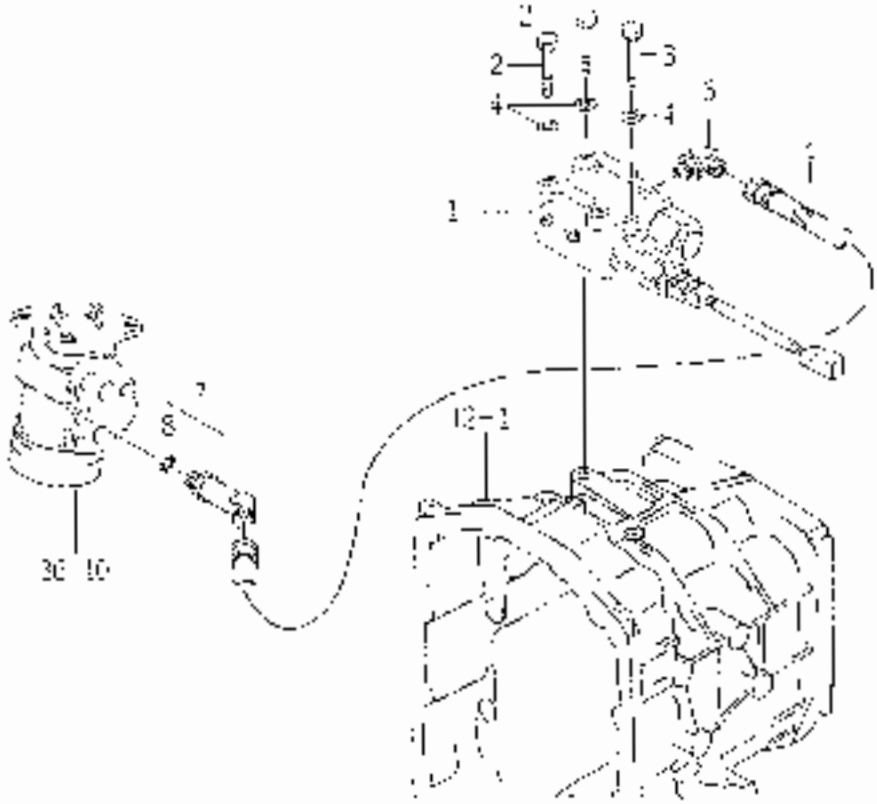

KEY	PART CODE	DESCRIPTION	QTY	TYPE OF MODEL TM319		ITEM CODE	REMARKS
1	K200 053 - 000 - 00	VALVE ASSY	1				FIG 07
2	V201 200 800 00	BOLT/M 8x60	2				
3	V201 - 200 - 805 - 00	BOLT/M 8x55	1				
4	V401 100 - 008 - 00	WASHER/SP/M 8	3				
5	1083 - 273 - 670 - 10	HOSE/1350 ASSY	1				
6	F117 - 202 - 010 - 00	ELBOW	1				
7	F113 - 211 - 300 - 00	ELBOW/45° ASSY	1				
8	V720 117 - 401 - 10	RING/O	1				

FIG. 46 STACK VALVE SYSTEM (V TYPE)

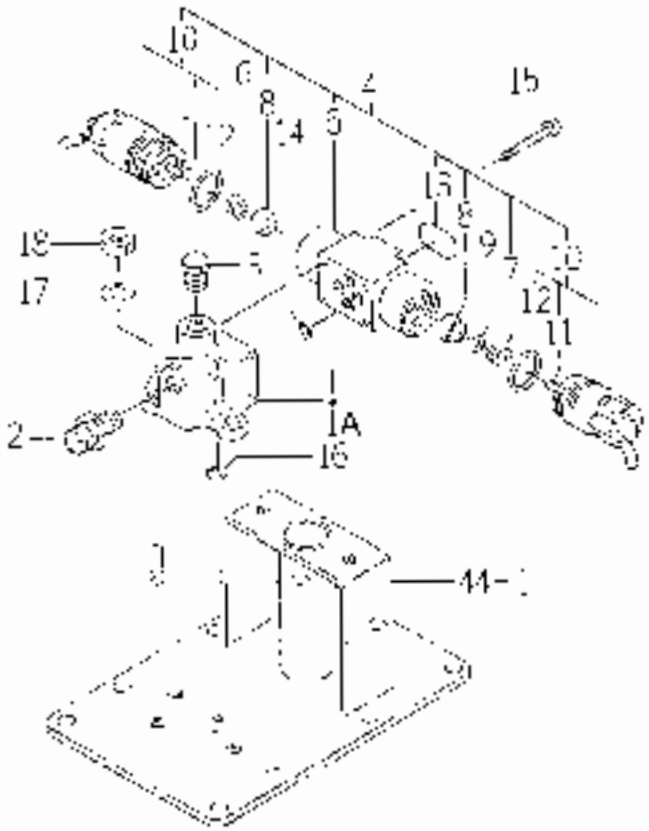

KEY	PART CODE	DESCRIPTION	QTY	TYPE OF MODEL TV618				REMARKS
1	1033-507-001-00	METAL	1	01				
1A	1500-507-001-10	METAL	1	02				
2	2-41-420-008-00	ADAPTER/1/4B	1	01				
3	7988-201-026-00	PLUG,DRAIN (1/4)	1					
4	K273-005-000-00	VALVE SOLENOID ASSY	1					
5	K273-005-100-00	VALVE SET	1					
6	K270-001-003-10	SPRING/HOLD	1					
7	K273-002-003-00	SPRING/HOLD	1					
8	K270-00-004-00	PLATE/SPRING	2					
9	V4-200-000-00	WASHER/M5	1					
10	K270-001-200-00	SOLENOID SET	2					
11	K270-001-201-00	ROD	2					
12	V723-112-002-90	RING/C	2					
13	K273-005-007-00	LABEL/POS	1					
14	V770-111-900-70	O-RING/1.7	4					
15	V770-540-504-00	SCREW/SOCKET	4					
16	V720-101-900-80	O-RING/4.5	2					
17	V401-100-008-00	WASHER/M6	3					
18	V204-200-008-00	NUT M6	3					

FIG. 47 MAIN PIPING SYSTEM

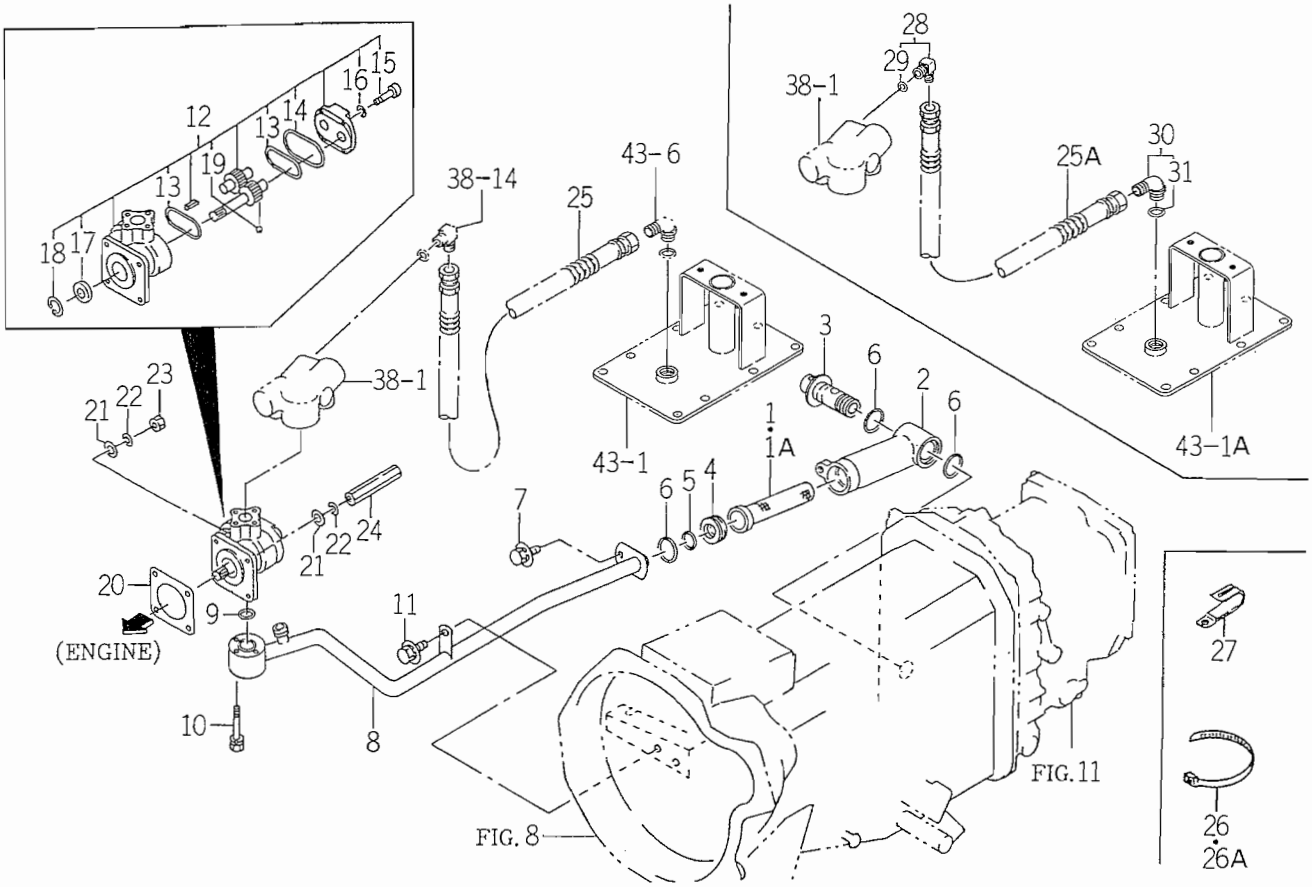

1688-508

KEY	PART CODE	DESCRIPTION	QTY	TYPE OF MODEL TMG18		ITC	COL	GRP	REMARKS
1	1434 - 503 - 320 - 10	FILTER	1	1- -200 201-					
1A	1682 - 508 - 300 - 00	FILTER COMP	1						
2	1434 - 503 - 004 - 10	CASE,OIL FILTER	1	*					
3	1434 - 503 - 330 - 00	BOLT,SET COMP	1	*					
4	1682 - 508 - 002 - 00	SPACER	1	*					
5	V720 - 102 - 402 - 10	O - RING/P21	1	*					
6	V720 - 103 - 502 - 80	O - RING/P28	3	*					
7	V211 - 360 - 801 - 60	BOLT,SEMS (SP)	1	*					
8	1688 - 508 - 200 - 00	PIPE/SUCTION COMP	1	*					
9	V720 - 112 - 402 - 00	O - RING/P20	1	*					
10	V210 - 260 - 604 - 50	BOLT,SEMS/M64X45	2	*					
11	V211 - 360 - 801 - 60	BOLT,SEMS (SP)	1	*					
12	1672 - 508 - 270 - 10	PUMP/GEAR ASSY	1	*					
13	1672 - 508 - 262 - 00	GASKET	2	*					
14	1672 - 508 - 263 - 00	GASKET	1	*					
15	V220 - 540 - 802 - 50	SCREW/SOCKET	4	*					
16	1672 - 508 - 264 - 00	WASHER	4	*					
17	V744 - 114 - 280 - 70	SEAL,OIL	1	*					
18	V705 - 140 - 028 - 00	RING,SNAP/28 C	1	*					
19	V682 - 200 - 001 - 00	BALL	2	*					
20	1404 - 503 - 006 - 00	PACKING,OIL PUMP	1	*					
21	V411 - 260 - 008 - 00	WASHER,PL/M 8	4	*					
22	V401 - 160 - 008 - 00	WASHER,SP/M 8	4	*					
23	V304 - 260 - 008 - 00	NUT/M 8	2	*					
24	1560 - 515 - 004 - 40	NUT/M8	2	*					

FIG. 47 MAIN PIPING SYSTEM

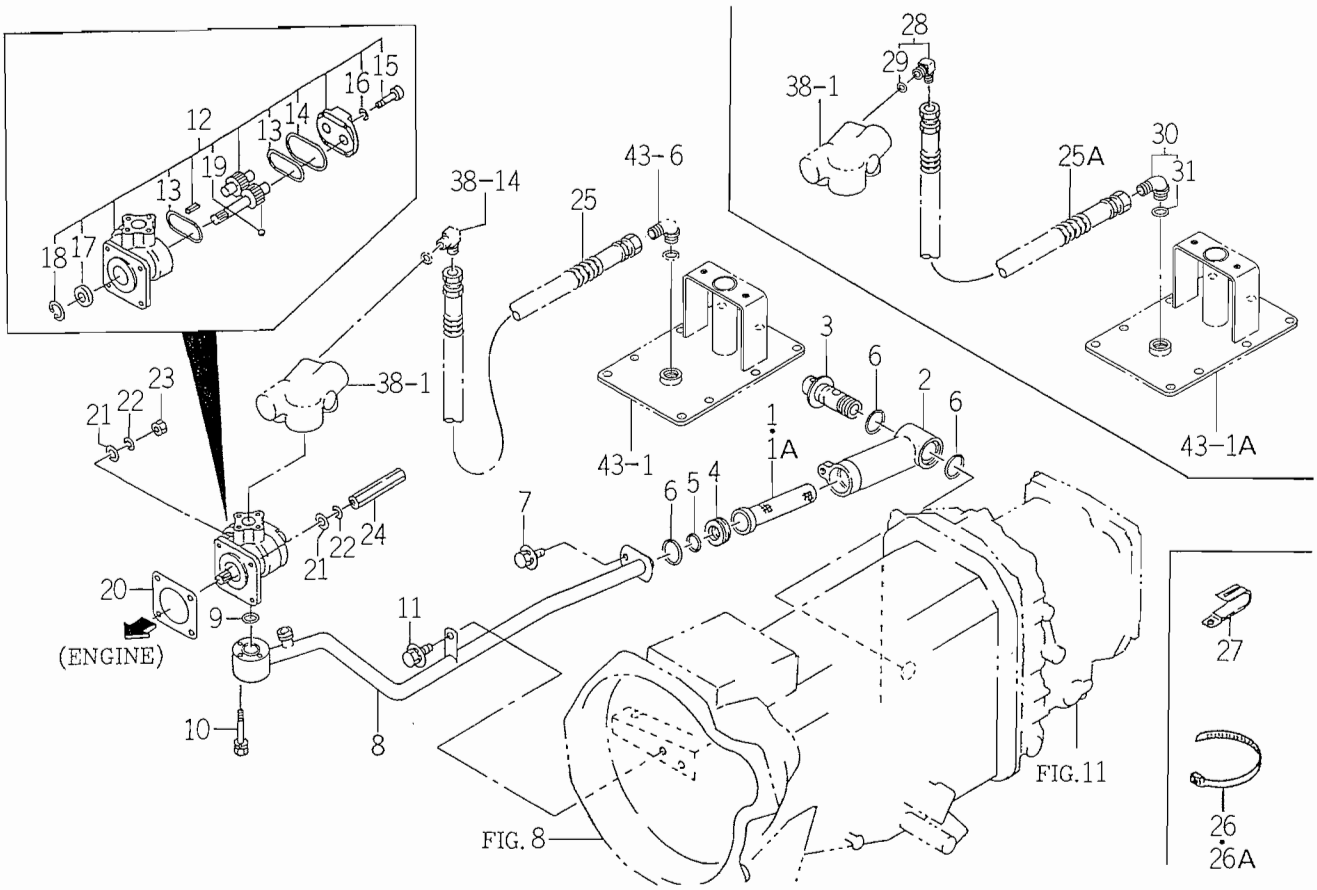

1688-508

KEY	PART CODE	DESCRIPTION	QTY	TYPE OF MODEL TMG18		ITC	COL	GRP	REMARKS
25	1688 - 508 - 210 - 00	HOSE/1350 ASSY	1	1- -131					
25A	1688 - 508 - 210 - 10	HOSE/1450 ASSY	1	132-		1			
26	1376 - 402 - 003 - 00	BAND,WIRE/140	2	1- -131					
26A	1342 - 402 - 006 - 00	BAND,WIRE/250	2	132-					
27	1425 - 621 - 004 - 00	CLAMP,HARNESS	1	132-					
28	P117 - 501 - 250 - 00	ELBOW ASSY	1	132-					
29	V720 - 112 - 401 - 40	O - RING/P14	1	132-					
30	P117 - 501 - 230 - 00	ELBOW/90° ASSY	1	132-					
31	V720 - 112 - 401 - 10	RING/O	1	132-					

FIG. 48 HOOD SYSTEM

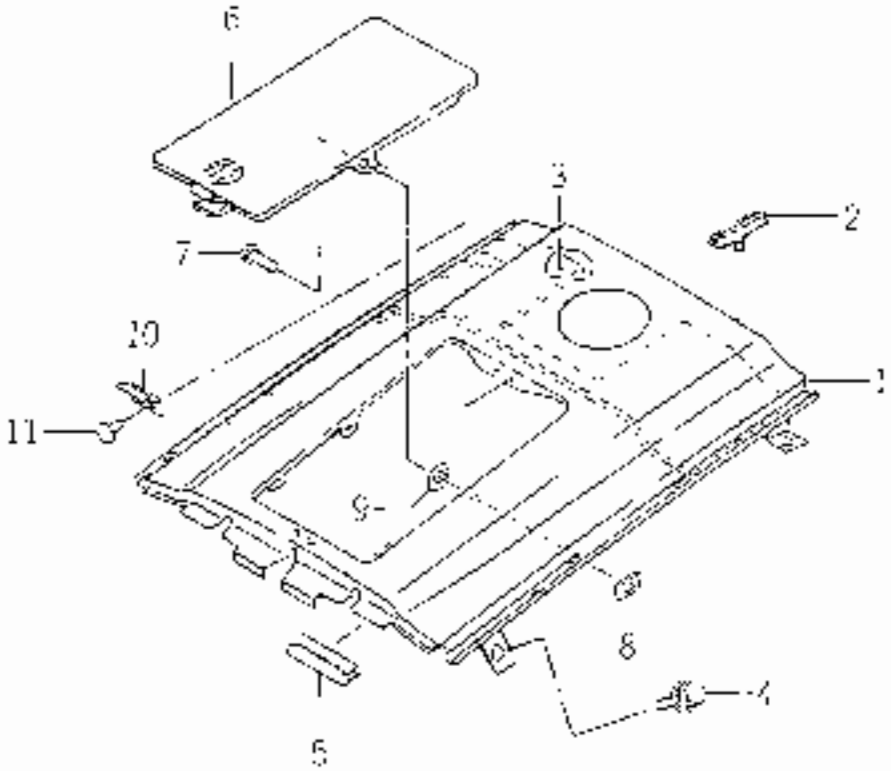

KEY	PART CODE	DESCRIPTION	QTY	TYPE OF MODEL				REMARKS
1	1083 - 601 - 200 - 10	HOOD	1				43	
2	1500 - 002 - 001 - 40	INSULATOR	4					
3	1083 - 601 - 002 - 00	INSULATOR	1					
4	V21 - 360 - 601 - 50	SCUTCHEON	4					
5	1075 - 601 - 003 - 00	TRIM	2					
6	083 - 601 - 001 - 00	COVER, HOOD	1				40	
7	V200 - 108 - 001 - 20	RIVET	2					
8	V350 - 1FC - 006 - 00	NUT SPEED	2					
9	500 - 001 - 017 - 00	WASHER	2					
10	1560 - 801 - 014 - 30	SPRING	1					
11	W200 - 104 - 007 - 00	RIVET	2					

FIG. 49 GRILLE SYSTEM

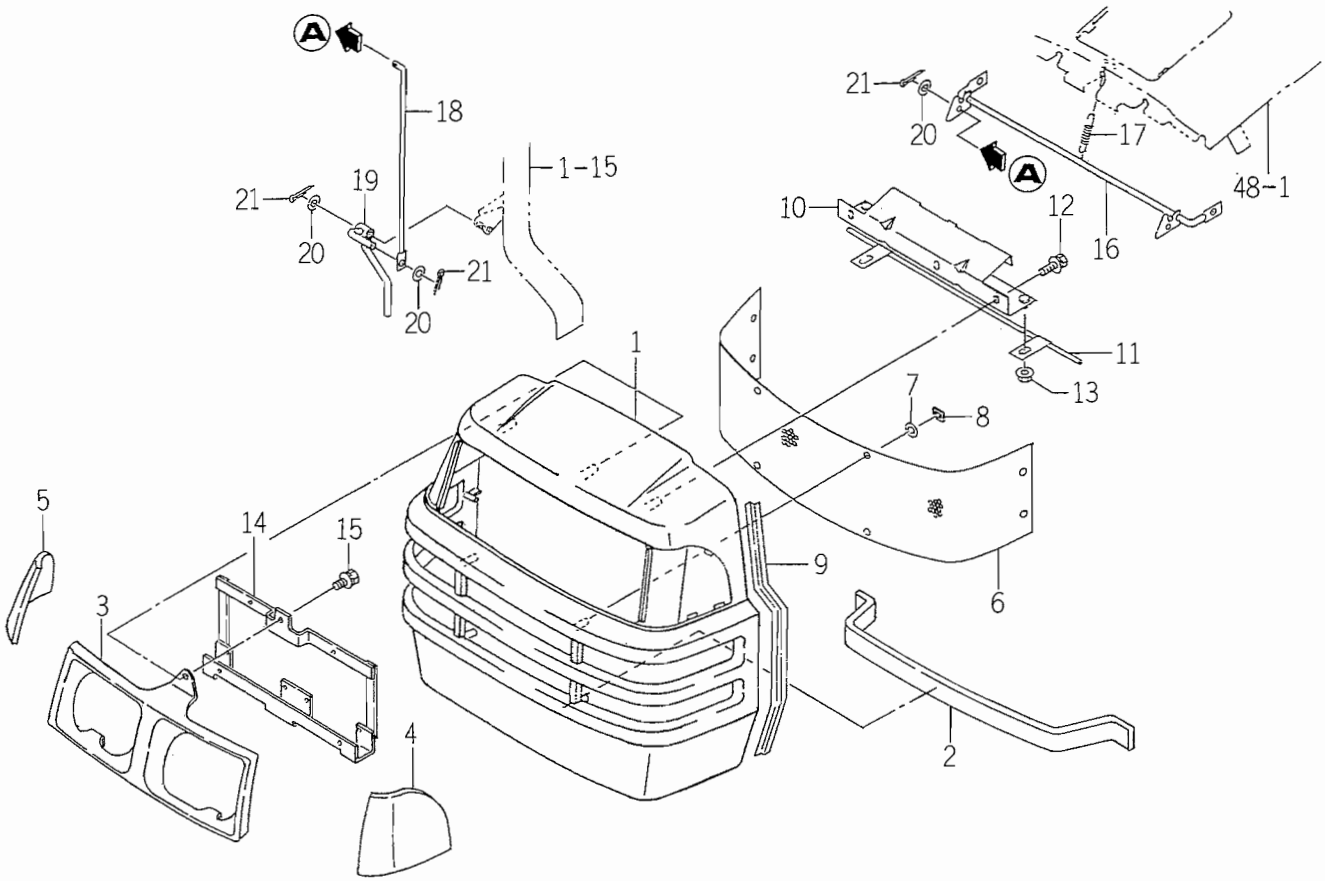

1683-602

KEY	PART CODE	DESCRIPTION	QTY	TYPE OF MODEL TMG18		ITC	COL	GRP	REMARKS
1	1675 - 602 - 003 - 00	GRILLE	1	*					
2	1683 - 602 - 002 - 00	INSULATOR/575	1	*					
3	1683 - 602 - 001 - 00	HOOD/LAMP	1	*					
4	1675 - 602 - 004 - 00	MOLDING/GRILLE/LH	1	*					
5	1675 - 602 - 005 - 00	MOLDING/GRILLE/RH	1	*					
6	1683 - 602 - 003 - 00	NET/GRILLE	1	*					
7	1444 - 601 - 015 - 00	WASHER/6X14X3	8	*					
8	V350 - 160 - 006 - 00	NUT,SPEED/P6	8	*					
9	1675 - 602 - 007 - 00	TRIM/420	2	*					
10	1672 - 602 - 210 - 00	PLATE/GRILLE COMP	1	*					
11	1672 - 602 - 240 - 00	PIN COMP	1	*					
12	V210 - 360 - 601 - 60	BOLT (SP) /M6X16	3	*					
13	V363 - 260 - 008 - 00	NUT,LOCK/M8	2	*					
14	1683 - 602 - 220 - 00	BRACKET/LAMP COMP	1	*					
15	V210 - 360 - 601 - 60	BOLT (SP) /M6X16	3	*					
16	1672 - 602 - 230 - 00	PLATE/LOCK COMP	1	*					
17	1414 - 312 - 002 - 00	SPRING,TENSION/53	1	*					
18	1672 - 602 - 002 - 00	ROD	1	*					
19	1672 - 602 - 250 - 10	LEVER COMP	1	*					
20	V411 - 260 - 008 - 00	WASHER,PL/M 8	3	*					
21	V500 - 162 - 002 - 00	PIN,SPLIT/2 X20	3	*					

FIG. 50 DASH COVER SYSTEM

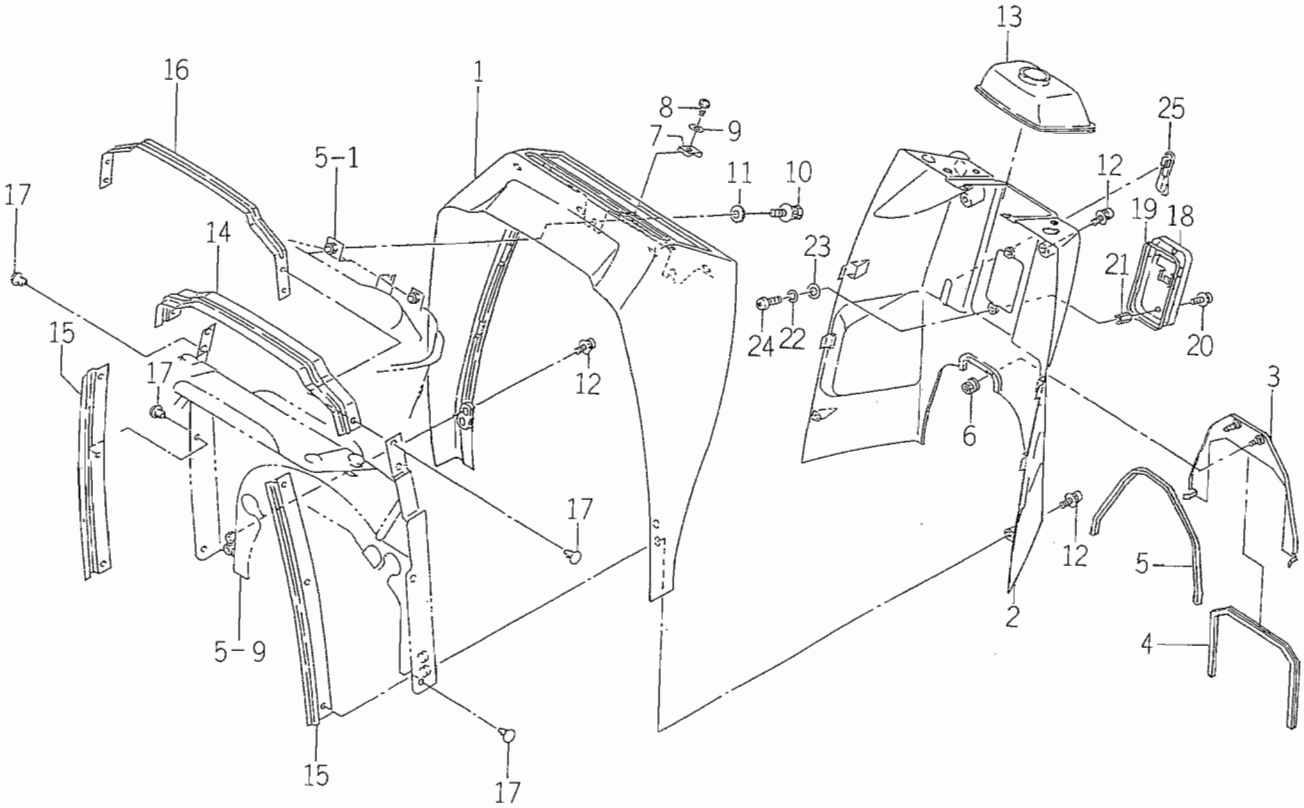

1683-603A

KEY	PART CODE	DESCRIPTION	QTY	TYPE OF MODEL TMG18		ITC	COL	GRP	REMARKS
1	1614 - 603 - 051 - 00	COVER/DUSH/F	1	*					
2	1614 - 603 - 052 - 00	COVER/DUSH/R	1	*					
3	1683 - 603 - 510 - 00	COVER/DUSH/REAR COMP	1	*					
4	1683 - 603 - 052 - 00	TRIM/490	1	*					
5	1682 - 603 - 006 - 00	TRIM/570	1	*					
6	V350 - 160 - 006 - 00	NUT,SPEED/P6	2	*					
7	1614 - 603 - 018 - 00	NUT/SPRING	2	*					
8	1560 - 401 - 004 - 40	BOLT/M5X16	2	*					
9	V411 - 260 - 006 - 00	WASHER / M6	2	*					
10	V211 - 360 - 801 - 60	BOLT,SEMS (SP)	2	*					
11	4101 - 102 - 038 - 00	WASHER/24X9X3.2	2	*					
12	V120 - 376 - 002 - 00	SCREW/SP	6	*					
13	1612 - 603 - 002 - 00	BOOT/STEERING	1	*					
14	1614 - 603 - 201 - 10	INSULATOR	1	*					
15	1672 - 603 - 006 - 00	INSULATOR	2	*					
16	1614 - 603 - 008 - 00	STAY/INSULATOR	1	*					
17	1527 - 604 - 002 - 00	CLIP (B)	8	*					
18	1672 - 603 - 200 - 00	BRACKET/FUSE COMP	1	*					
19	1672 - 603 - 005 - 00	TRIM/350	1	*					
20	V120 - 376 - 001 - 20	SCREW/SP	2	*					
21	1672 - 603 - 007 - 00	NUT/M6X15	2	*					
22	V401 - 160 - 006 - 00	WASHER,SP/M 6	2	*					
23	V411 - 260 - 006 - 00	WASHER / M6	2	*					
24	V111 - 166 - 001 - 20	SCREW/M6X12	2	*					
25	1612 - 603 - 005 - 00	CAP/PARKING	1	*					

FIG. 51 SIDE COVER AND MIRROR SYSTEM

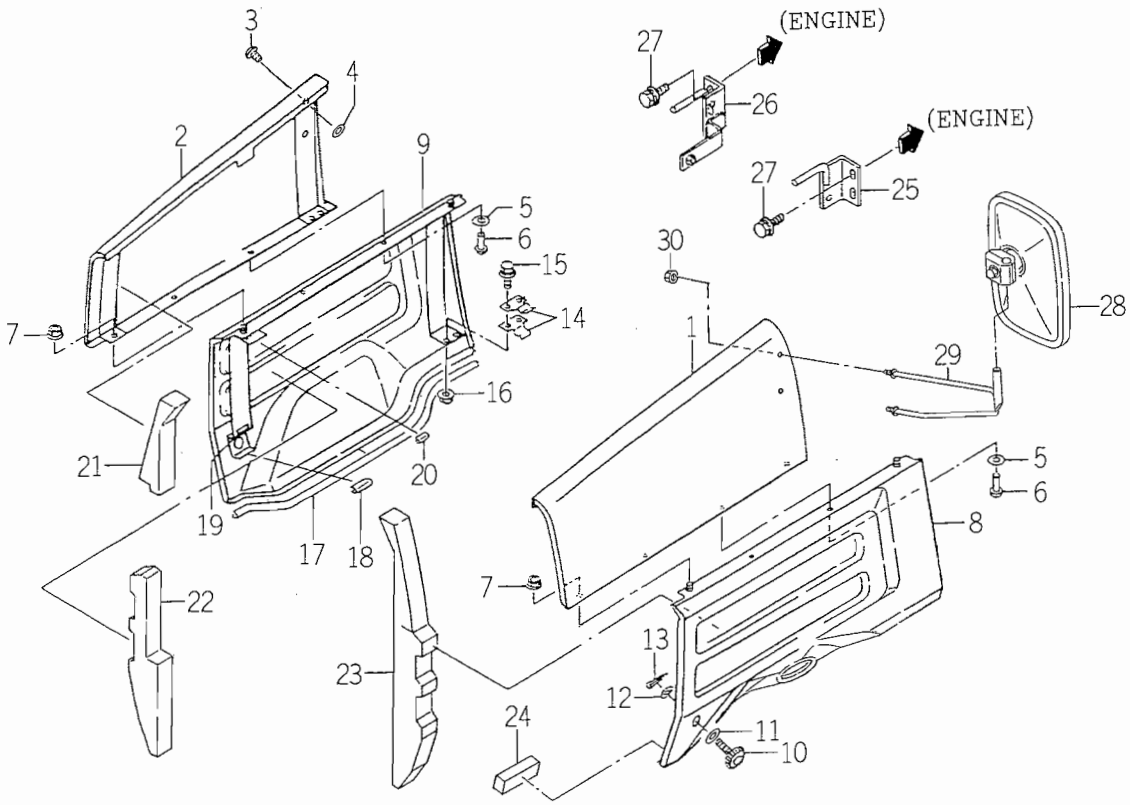

1683-604

KEY	PART CODE	DESCRIPTION	QTY	TYPE OF MODEL TMG18		ITC	COL	GRP	REMARKS
1	1683 - 604 - 240 - 10	COVER/SIDE/LH COMP	1	*			4G		
2	1683 - 604 - 250 - 10	COVER/SIDE/RH COMP	1	*			4G		
3	1527 - 604 - 002 - 00	CLIP (B)	2	*					
4	V411 - 260 - 008 - 00	WASHER,PL/M 8	2	*					
5	1480 - 604 - 204 - 00	WASHER	12	*					
6	W296 - 134 - 007 - 00	RIVET,BLIND	6	*					
7	V360 - 260 - 006 - 00	NUT/M6	4	*					
8	1683 - 604 - 200 - 20	COVER/UNDER/LH COMP	1	*			8F		
9	1683 - 604 - 210 - 20	COVER/UNDER/RH COMP	1	*			8F		
10	1672 - 604 - 003 - 00	BOLT/KNOB/M08X31	2	*					
11	V411 - 260 - 012 - 00	WASHER /M12	2	*					
12	V411 - 260 - 008 - 00	WASHER,PL/M 8	2	*					
13	V500 - 162 - 001 - 50	PIN,SPLIT/2 X15	2	*					
14	1560 - 604 - 022 - 70	SPRING	4	*					
15	V211 - 360 - 801 - 60	BOLT,SEMS (SP)	4	*					
16	V362 - 260 - 008 - 00	NUT/WASHER	4	*					
17	1683 - 604 - 004 - 00	INSULATOR/565	2	*					
18	1672 - 604 - 005 - 00	INSULATOR	2	*					
19	1672 - 601 - 001 - 00	INSULATOR	2	*					
20	1672 - 601 - 002 - 00	TRIM/20	2	*					
21	1672 - 604 - 008 - 00	INSULATOR/RH	1	*					
22	1672 - 604 - 007 - 00	INSULATOR/RH	1	*					
23	1672 - 604 - 006 - 00	INSULATOR/LH	1	*					
24	1682 - 604 - 007 - 10	INSULATOR/30X30X80	2	*					
25	1672 - 604 - 220 - 00	STAY/COVER/LH COMP	1	*					

FIG. 51 SIDE COVER AND MIRROR SYSTEM

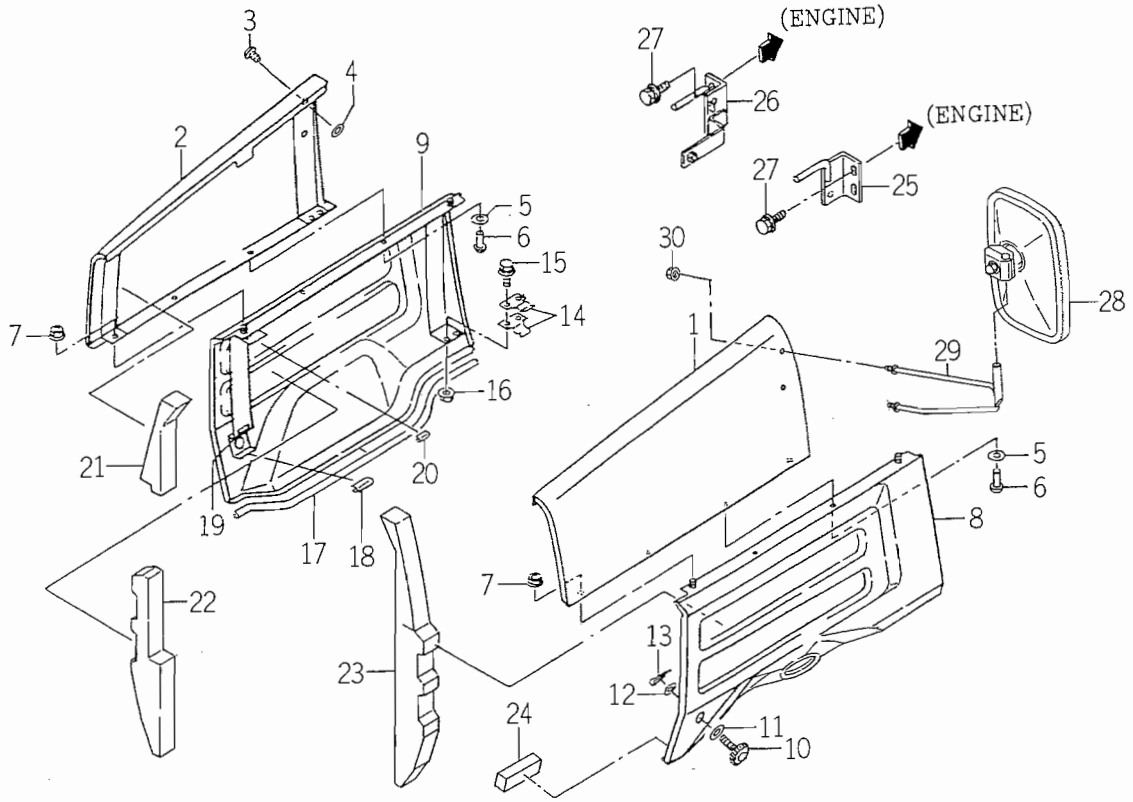

1683-604

KEY	PART CODE	DESCRIPTION	QTY	TYPE OF MODEL TMG18		ITC	COL	GRP	REMARKS
26	1683 - 604 - 230 - 00	STAY/COVER/RH COMP	1	*					
27	V211 - 660 - 802 - 50	BOLT/M8X25	4	*					
28	1674 - 619 - 300 - 10	MIRROR ASSY	1	*					
29	1682 - 640 - 210 - 10	STAY/MIRROR COMP	1	*					
30	V363 - 260 - 008 - 00	NUT,LOCK/M8	2	*					

FIG. 52 FENDER SYSTEM

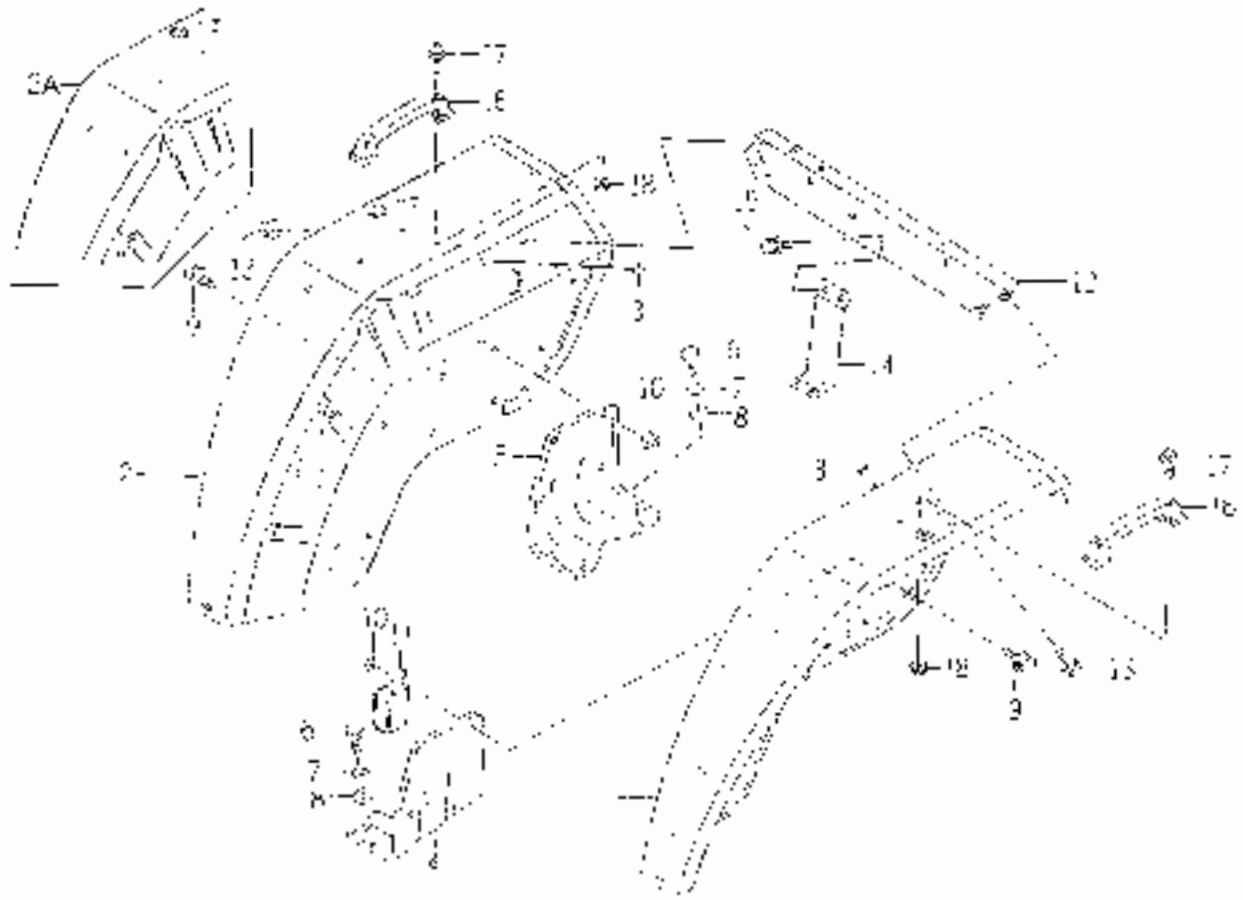

KEY	PART CODE	DESCRIPTION	QTY	TYPE OF MODEL V218			REMARKS
1	1082 - 606 - 250 - 00	FENDER/LH GLVP					
2	1882 - 606 - 280 - 00	FENDER RH COMP					
2A	662 - 606 - 210 - 30	FENDER RH COMP	1	122-			
3	1444 - 621 - 016 - 00	CAP/RUBBER	2				
4	1672 - 606 - 011 - 00	HOLDER/FENDER/LH	1				
5	1072 - 000 - 002 - 00	HOLDER/FENDER/RH	1				
6	V191 - 261 - 202 - 50	BOLT/M12X20	4				
7	V431 - 100 - 012 - 00	WASHER/M12	4				
8	V411 - 260 - 012 - 00	WASHER/V12	2				
9	V211 - 300 - 807 - 50	BOLT/V12 (SP)	8				
10	V082 - 210 - 008 - 00	NUT/WASHER	3				
11	1425 - 621 - 004 - 00	CLAMP/HARNESS	1				
12	1082 - 000 - 270 - 10	STAY/FENDER GLVP	1				
13	V211 - 360 - 002 - 00	BOLT (SP) M6X20	3				
14	1892 - 606 - 230 - 10	STAY/PLATE GLVP	1				
15	V21 - 360 - 602 - 00	BOLT (SP) M6X20	2				
16	3670 - 236 - 003 - 00	SHIM	2				
17	V120 - 378 - 002 - 30	SCREW (SP)	4				
18	V261 - 260 - 005 - 00	NUT	2				

FIG. 53 LEVER GUIDE AND SEAT BRACKET SYSTEM

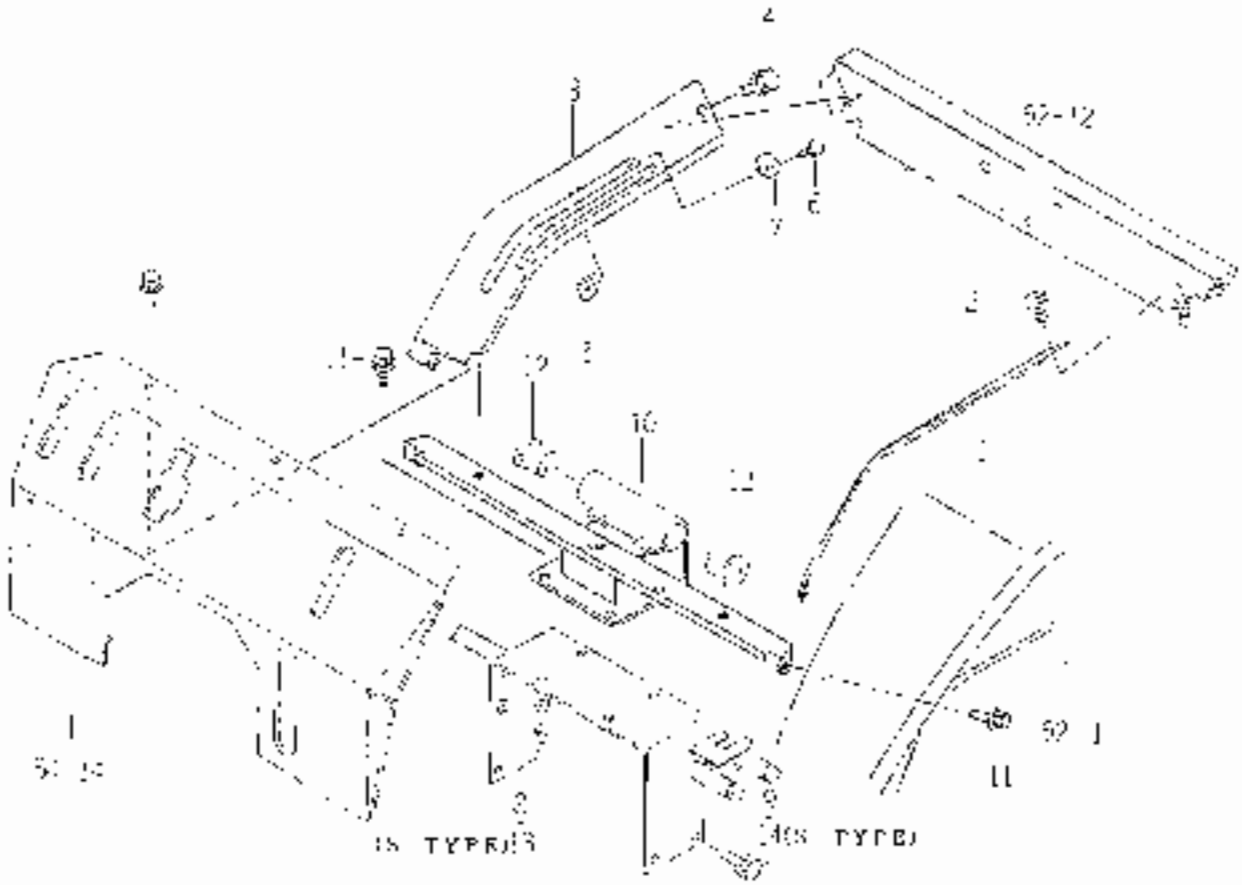

KEY	PART CODE	DESCRIPTION	QTY	TYPE OF MODEL				REMARKS
	1672 606 210 01	GUIDE COVER/LH COMP	1					
2	V211 360 802 00	BOLT (SP) V8x70	2					
3	1672 606 - 220 01	GUIDE L-VER/RH COMP	1					
4	V211 310 802 00	BOLT (SP) V8x20	2					
5	1672 - 606 - 200 - 00	STOPPER COMP	2					
6	3505 - 605 - 007 - 00	BOLT/PIVOT	2					
7	1672 - 606 - 009 - 00	PLATE/STOPPER	2					
8	1683 611 600 30	BRACKET/SEAT COMP	1					
9	V711 321 002 00	BOLT/SEVR	4					
10	1688 611 210 20	BRACKET/SEAT/R COMP	1					
11	V211 360 802 00	BOLT (SP) M6X30	4					
12	1488 - 511 - 001 - 00	BUSH-RUBBER 4"	7					
13	1668 - 511 - 000 - 00	BRACKET/SEAT COMP	1					
14	V2 1 261 - 002 - 00	BOLT,SEVR	4					

FIG. 54 STEP SYSTEM

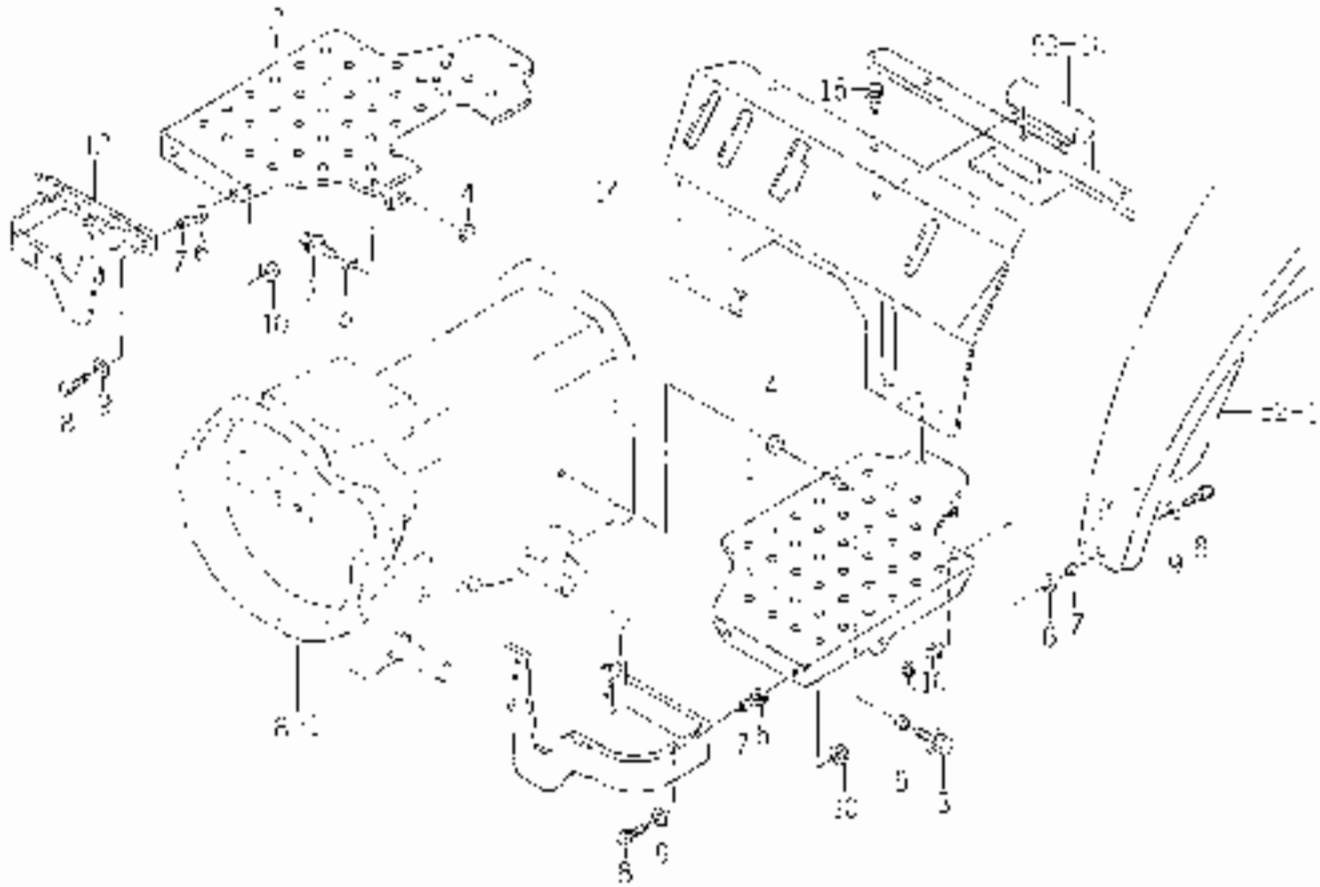

KEY	PART CODE	DESCRIPTION	QTY	TYPE OF MODEL	REMARKS
	1683-6[illegible]6-500-20	FLOOR/L-H 'XXIAP	1		
2	1685 [illegible] 510 10	FLOOR/R-H COLAF	1		
3	V711 [illegible]-007-50	BOLT/8F	3		
4	2139 505 002 00	CROSMEMBER	3		
5	1572 [illegible]-002-00	COLLAR/[illegible]	3		
6	1427 521-012-00	GROMMET	8		
7	1677-816-008-00	COLLAR/[illegible]	3		
8	V2[illegible]0-580-600-00	BOLT/S	8		
9	3500-500-302-00	WASHER/PLAIN TENSION	8		
10	V300-200-000-00	NUT/M8	3		
11	V301-200-000-00	NUT/M6	2		
12	1686-616-520-10	STEP/FLOOR/RH COVD			
13	1682-616-520-50	STEP FLOOR/LH COVR	1		
14	1683 616 520 10	COVER/CLAMP COVF	1		
15	V711-360-[illegible]-00	BOLT/SP [illegible]	4		

FIG. 55 LAMP SYSTEM

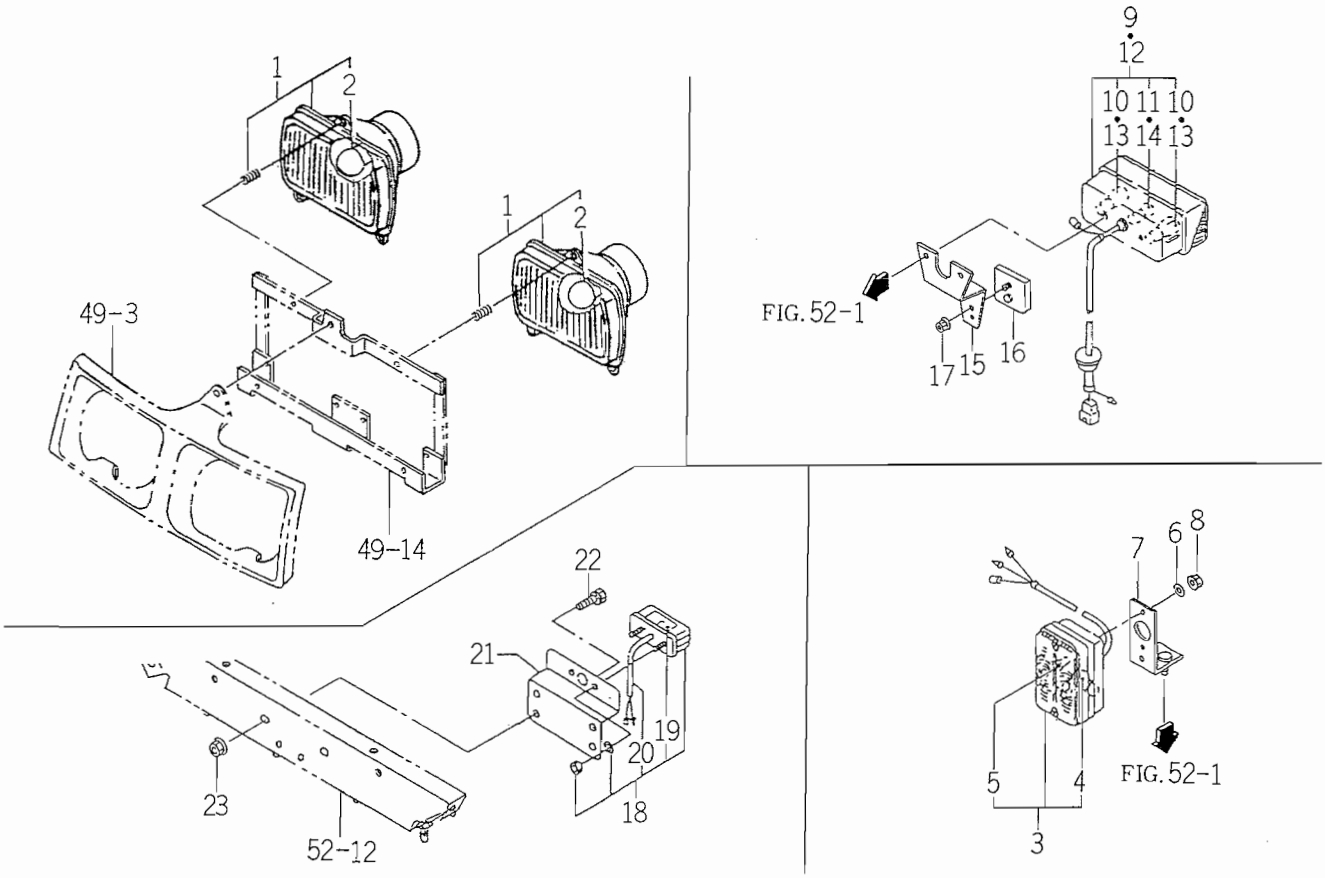

1682-650

KEY	PART CODE	DESCRIPTION	QTY	TYPE OF MODEL TMG18		ITC	COL	GRP	REMARKS
1	1674 - 652 - 200 - 00	LAMP/HEAD ASSY	2	*					
2	1674 - 652 - 202 - 00	BULB/12V/45/40W	2	*					
3	1674 - 654 - 200 - 00	LAMP/FRONT SET	2	*					
4	1674 - 654 - 211 - 00	BULB/12V21W	2	*					
5	1674 - 654 - 212 - 00	BULB/12V5W	2	*					
6	V411 - 260 - 005 - 00	WASHER,PL/M 5	4	*					
7	1682 - 660 - 220 - 00	PLATE/L/50X117 COMP	2	*					
8	V362 - 260 - 008 - 00	NUT/WASHER	4	*					
9	1674 - 654 - 240 - 00	LAMP/COMBI/REAR/LH	1	*					
10	1674 - 654 - 211 - 00	BULB/12V21W	2	*					
11	1674 - 654 - 212 - 00	BULB/12V5W	1	*					
12	1674 - 654 - 260 - 00	LAMP/COMBI/REAR/RH	1	*					
13	1674 - 654 - 211 - 00	BULB/12V21W	2	*					
14	1674 - 654 - 212 - 00	BULB/12V5W	1	*					
15	1682 - 660 - 003 - 00	BRACKET/REFLECTOR	2	*					
16	1600 - 622 - 321 - 00	REFLECTOR	2	*					
17	V361 - 260 - 006 - 00	NUT	2	*					
18	1674 - 654 - 270 - 00	LAMP/NUMBERPLAT SET	1	*					
19	1674 - 654 - 271 - 00	BULB/12V/5W	1	*					
20	1674 - 654 - 272 - 00	HARNESS/LAMP	1	*					
21	1594 - 654 - 261 - 10	BRACKET/LAMP/NUMBER	1	*					
22	V211 - 260 - 801 - 60	BOLT,SEMS (S) M8X16	2	*					
23	V362 - 260 - 008 - 00	NUT/WASHER	2	*					

FIG. 56 PANEL SYSTEM

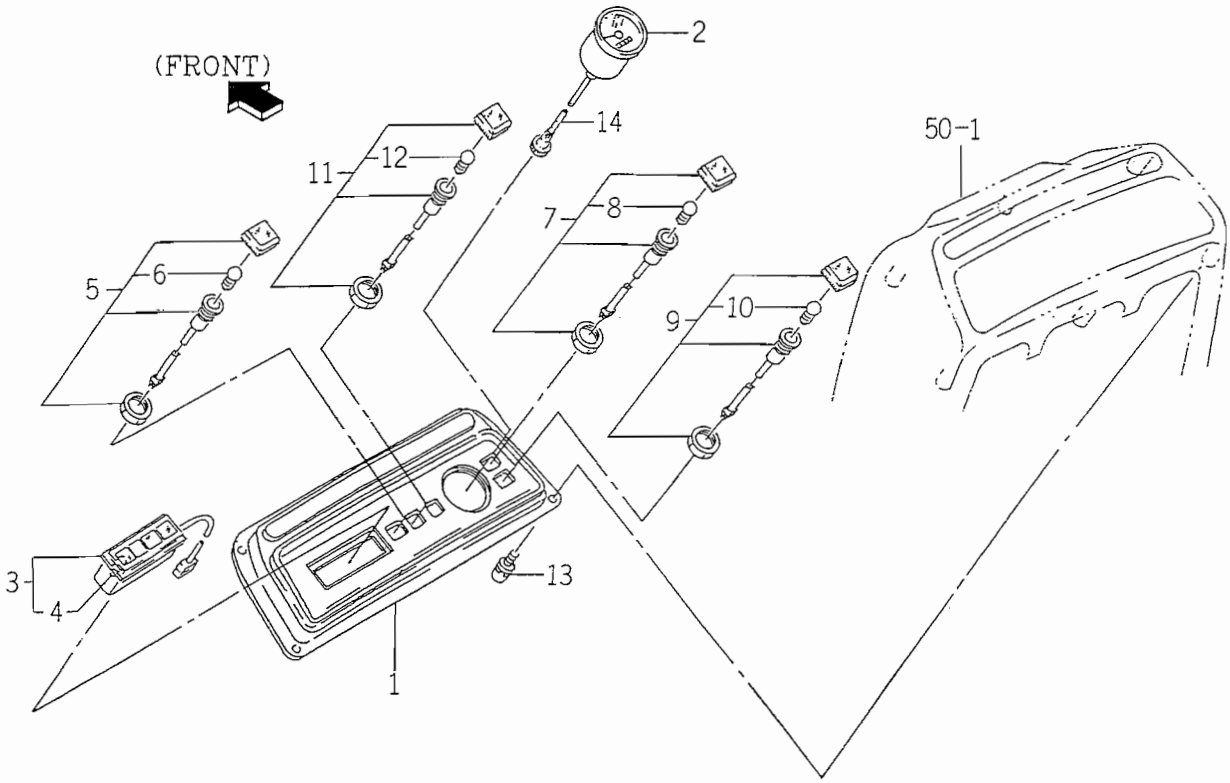

1682-670

KEY	PART CODE	DESCRIPTION	QTY	TYPE OF MODEL TMG18		ITC	COL	GRP	REMARKS
1	1682 - 670 - 001 - 00	PANEL/METER	1	*					
2	1682 - 670 - 250 - 10	METER/HOUR ASSY	1	*					
3	1672 - 670 - 200 - 00	MONITOR ASSY	1	*					
4	3650 - 270 - 214 - 00	BULB	4	*					
5	3652 - 271 - 220 - 00	LAMP,WINKER ASSY	2	*					
6	1403 - 621 - 031 - 00	BULB/12V 3W	2	*					
7	1682 - 670 - 210 - 00	LAMP/HAZARD ASSY	1	*					
8	1403 - 621 - 031 - 00	BULB/12V 3W	1	*					
9	1682 - 670 - 220 - 00	LAMP/LIGHT ASSY	1	*					
10	1403 - 621 - 031 - 00	BULB/12V 3W	1	*					
11	1682 - 670 - 230 - 00	LAMP/TRAILER ASSY	1	*					
12	1403 - 621 - 031 - 00	BULB/12V 3W	1	*					
13	V120 - 366 - 001 - 60	SCREW	4	*					
14	1423 - 621 - 003 - 00	CABLE,METER	1	*					

FIG. 57 SWITCH SYSTEM

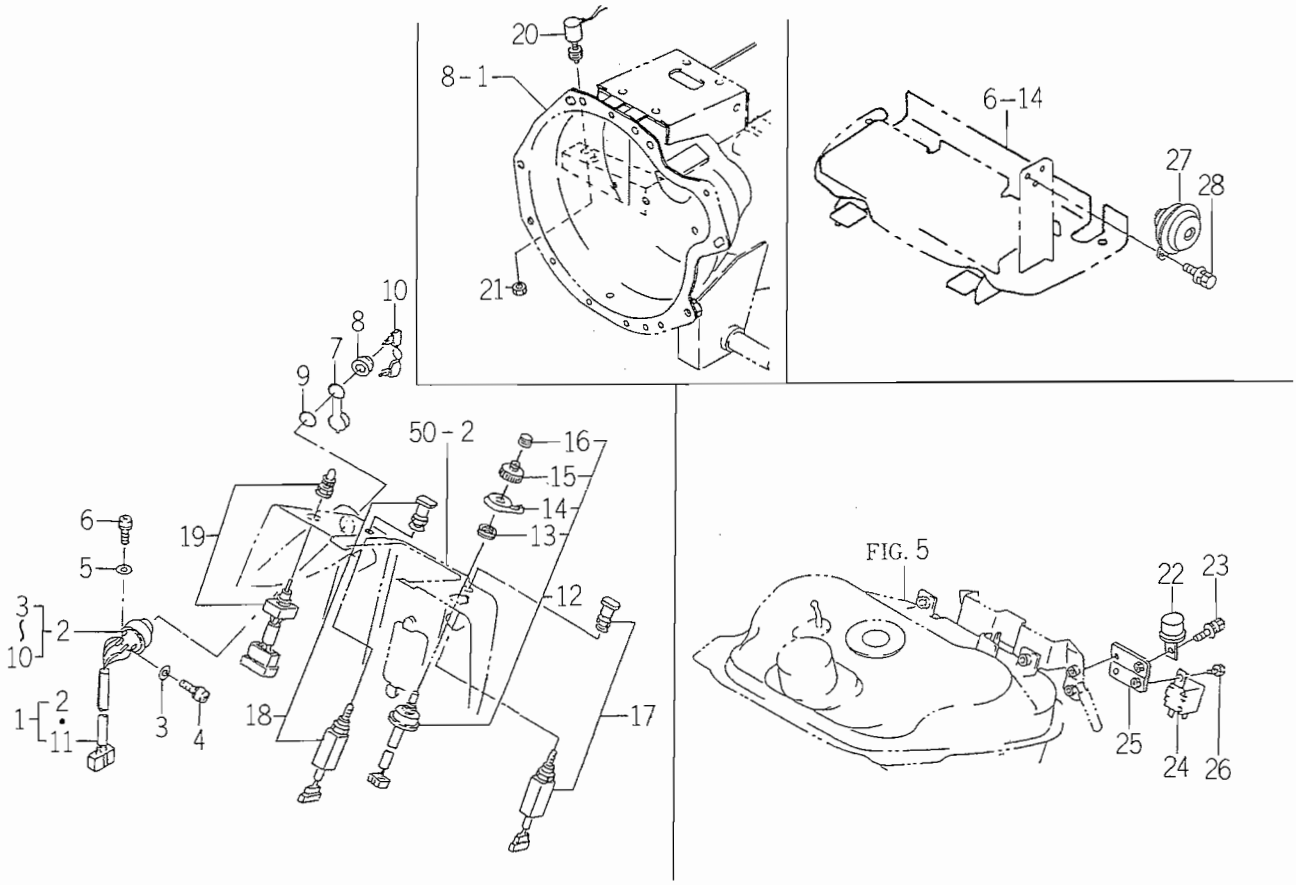

1683-680A

KEY	PART CODE	DESCRIPTION	QTY	TYPE OF MODEL TMG18		ITC	COL	GRP	REMARKS
1	1575 - 623 - 210 - 00	SWITCH,STARTER ASSY	1	*					
2	1488 - 621 - 220 - 10	SWITCH,STARTER SET	1	*					
3	V411 - 260 - 004 - 00	WASHER,PL/M4	3	*					
4	V120 - 264 - 000 - 80	SCREW,PLUS/M4X8	3	*					
5	V411 - 260 - 005 - 00	WASHER,PL/M 5	3	*					
6	V120 - 265 - 001 - 00	SCREW,PLUS/M5X0.8X8	3	*					
7	1444 - 621 - 311 - 00	CAP	1	*					
8	1444 - 621 - 312 - 00	NUT,RING/M28X1.0	1	*					
9	1444 - 621 - 313 - 00	WASHER	1	*					
10	1444 - 621 - 320 - 00	KEY ASSY	1	*					
11	1575 - 623 - 211 - 00	HARNESS/STARTER	1	*					
12	1544 - 623 - 001 - 00	SWITCH ASSY	1	*					
13	1544 - 623 - 232 - 00	NUT/M22	1	*					
14	1544 - 623 - 233 - 00	LEVER	1	*					
15	1544 - 623 - 234 - 00	KNOB	1	*					
16	1544 - 623 - 235 - 00	BOOT/HORN	1	*					
17	1600 - 623 - 200 - 00	SWITCH	1	*					
18	1600 - 623 - 210 - 00	SWITCH,LAMP ASSY	1	*					
19	1600 - 623 - 220 - 00	SWITCH,HAZARD ASSY	1	*					
20	1518 - 621 - 320 - 00	SWITCH,STOP	1	*					
21	V335 - 260 - 012 - 00	NUT	1	*					
22	1600 - 623 - 002 - 00	FLASHER ASSY	1	*					
23	V210 - 360 - 601 - 60	BOLT (SP) /M6X16	1	*					
24	1581 - 621 - 290 - 00	RELAY/4P	1	*					
25	1682 - 690 - 350 - 00	STAY/RELAY COMP	1	*					

FIG. 57 SWITCH SYSTEM

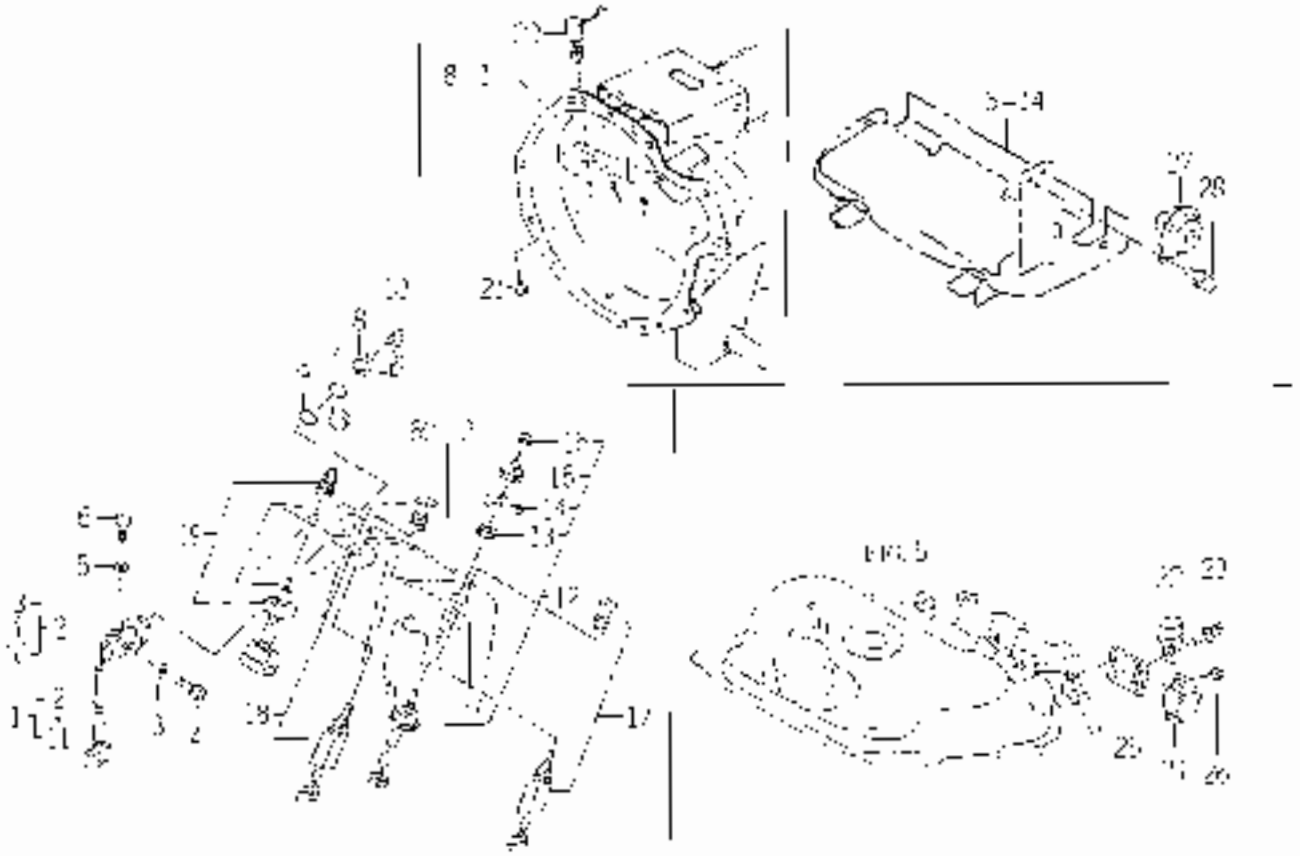

KEY	PART CODE	DESCRIPTION	QTY	TYPE OF MODEL TASTR				REMARKS
25	V211-360-501-00	BOLT (SP) 2/4EX'S						
27	1074-884-200-00	HORN ASSY						
28	V211-360-501-50	BOLT.5DMS (SP)						

FIG. 58 SWITCH SYSTEM (EXCEPT S,V TYPE)

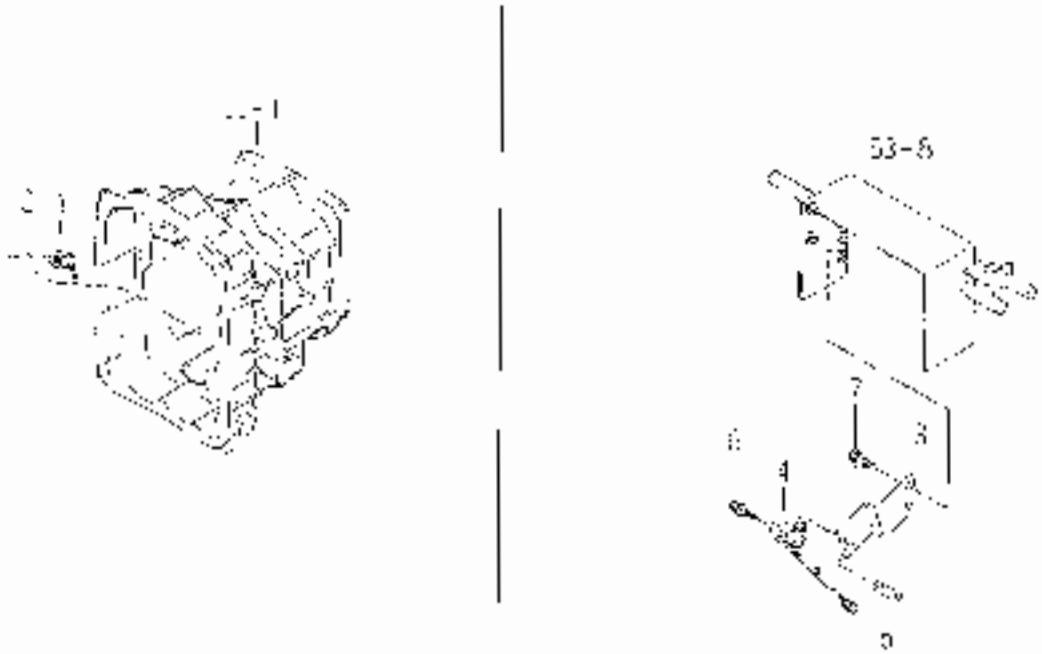

KEY	PART CODE	DESCRIPTION	QTY	TYPE OF MODEL TV918		LOC	COL	GRP	REMARKS
1	1510 - 671 - 320 - 00	SWITCH,STOP	1						
2	V082 200 221 00	BALL	1						
3	1663 - 216 - 065 - 00	PLATE/7/FX134	1						
4	1560 664 270 00	SWITCH,LIMIT ASSY	1						
5	3655 - 271 - 001 - 00	PLATE/L/3X40	1						
6	V120 - 304 - 002 - 00	SCREW/SP	7						
7	V311 - 360 - 802 00	BOLT/SP: M8X20	2						

FIG. 59 SWITCH SYSTEM (V TYPE EXCEPT S)

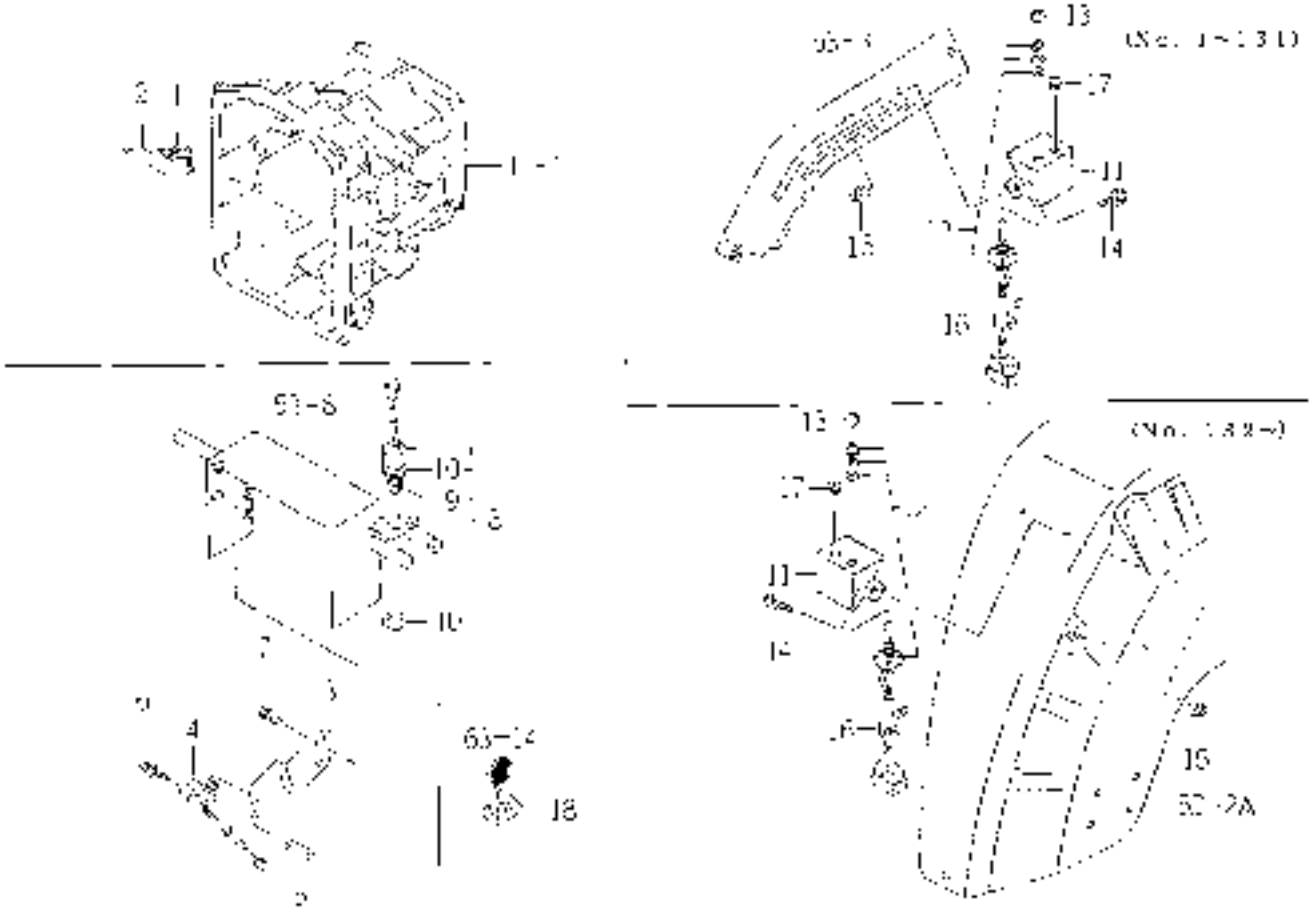

KEY	PART CODE	DESCRIPTION	QTY	TYPE OF MODEL				REMARKS
1	1518 621 320 00	SWITCH/STOP	1					
2	V002 200 001 00	BALL	1					
3	1623 - 716 - 050 - 00	PLATE, 2-SWITCH	1					
4	1560 - 664 - 270 - 00	SWITCH/LIMIT ASSY	1					
5	3656 - 271 - 001 - 00	PLATE-L 3X40	1					
6	V120 - 364 - 002 - 50	SCREW/SP	2					
7	V211 - 360 - 302 - 00	BOLT (SP) V8X25	2					
8	1575 - 621 - 250 - 00	SWITCH/PUSH ASSY	1					
9	1401 - 623 - 220 - 00	BOOT	1					
10	V401 - 623 - 000 - 00	NUT V20	2					
11	1564 - 530 - 430 - 00	BRACKET COVER	1					
12	1530 - 530 - 250 - 00	SWITCH/TOGGLE	1					
13	3545 - 360 - 001 - 00	CAP	1					
14	V120 - 370 - 001 - 00	SCREW, SP	2					
15	V161 - 250 - 005 - 00	NUT	2					
16	1425 621 004 00	CLAMP/HARNESS	1					
17	1432 - 651 - 000 - 00	CHANNEL/RUBBER	1					
18	1668 620 630 00	COUPLER/SHORT/CLAMP	1					

FIG. 60 SWITCH SYSTEM (S TYPE EXCEPT V)

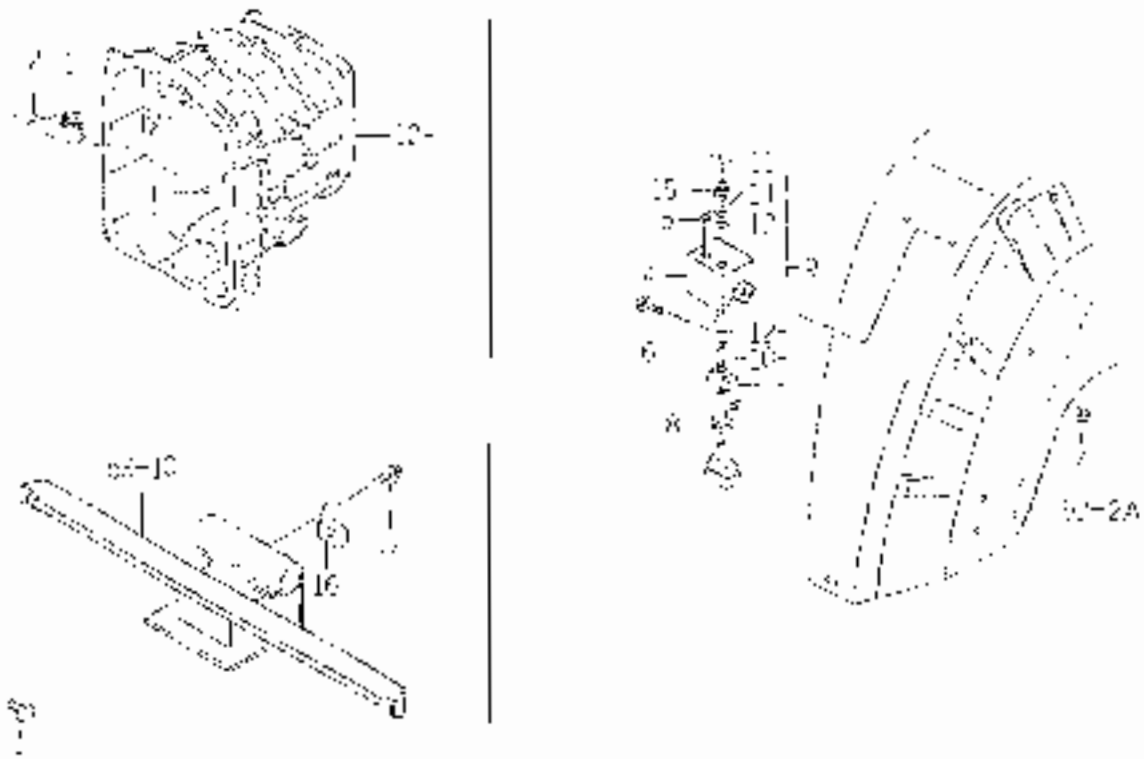

KEY	PART CODE	DESCRIPTION	QTY	TYPE OF MODEL			CODE	GRP	REMARKS
1	15[illegible]6 - 671 - 970 - 00	SWITCH ASSY	[illegible]	[illegible]					
2	V082 - 200 - 001 - 00	BAR	[illegible]	[illegible]					
3	V203 - 201 - 202 - 00	BOLT/W 12X30	2	[illegible]					
4	1584 - 630 - 430 - 00	BRACKET COMP	1	[illegible]					
5	1482 - 651 - 028 - 00	SCREW-SET/SW 3X3	1	[illegible]					
6	V130 - 370 - 001 - 60	SLIDE/SW/SP	2	[illegible]					
7	V081 - 260 - 006 - 00	NUT	2	[illegible]					
8	1440 - 671 - 004 - 00	CLAMP/HARNESS	1	[illegible]					
9	1640 - 674 - 200 - 00	SWITCH/PTO ASSY	1	[illegible]					
10	1640 - 674 - 202 - 00	NUT	[illegible]	[illegible]					
11	1640 - 674 - 203 - 00	KNOB	[illegible]	[illegible]					
12	1640 - 671 - 204 - 00	WASHER	1	[illegible]					
13	1640 - 674 - 205 - 00	WASHER	1	[illegible]					
14	1640 - 671 - 206 - 00	NUT	1	[illegible]					
15	1640 - 674 - 001 - 00	BOOT/SWITCH	1	[illegible]					
16	1563 - 673 - 530 - 00	RELAY/SP ASSY	1	[illegible]					
[illegible]	V210 - 360 - 501 - 50	BOLT (SP) [illegible]	1	[illegible]					

FIG. 61 SWITCH SYSTEM (SV TYPE)

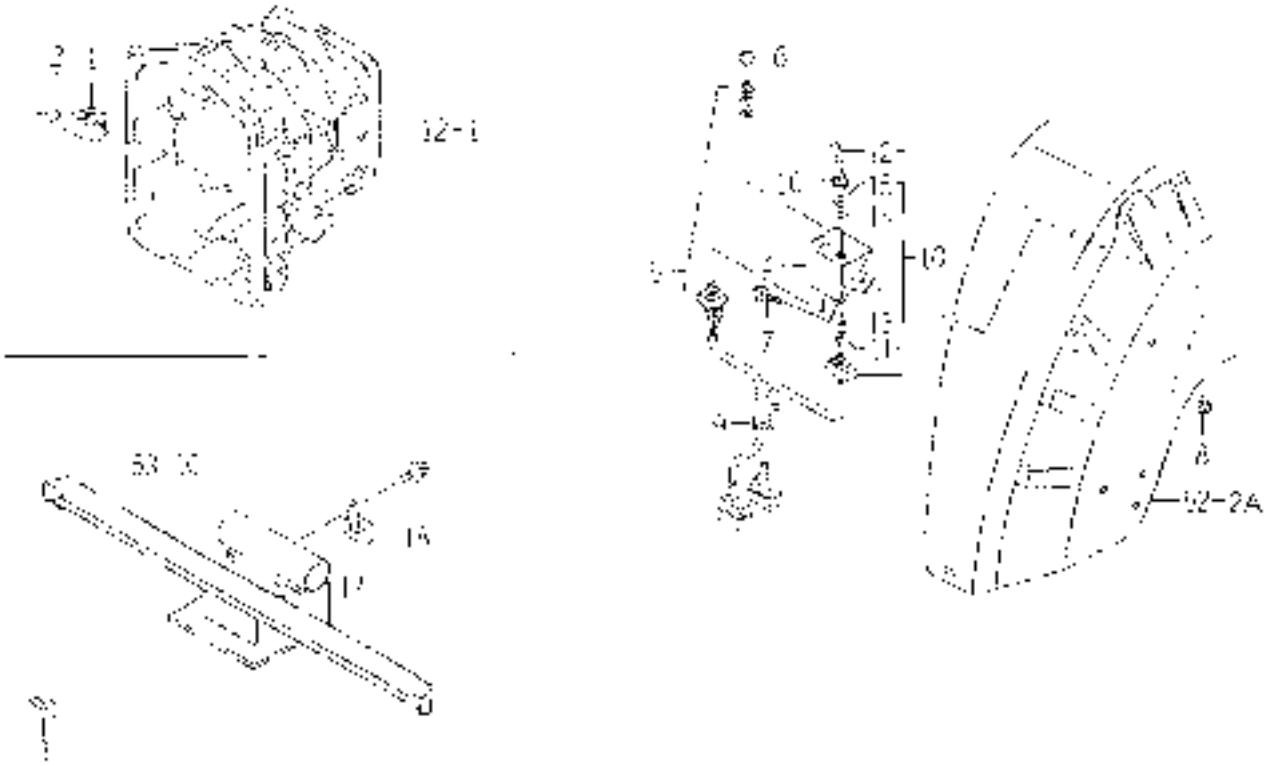

KEY	PART CODE	DESCRIPTION	QTY	TYPE OF MODEL			COD	GRP	REMARKS
				TW019		ITC			
1	1516 - 671 - 320 - 00	SWITCH,SOF							
2	V082 - 200 - 001 - 00	BALL							
3	V209 291 202 00	BOLT, M12X20	2						
4	1564 - 530 - 400 - 00	BRACKET ASSY							
5	1680 680 260 00	SWITCH,TOGGLE							
6	3649 - 969 - 001 - 00	CAP							
7	V120 - 376 - 001 00	SHEAVE	3						
8	V801 260 006 00	NUT	3						
9	1475 - 671 004 - 00	CLAMP,HARNESS							
10	1640 674 200 00	SWITCH,TOG ASSY							
11	1640 - 674 - 202 - 00	NUT							
12	1640 - 674 - 203 - 00	KNOB							
13	1640 674 204 00	HANDLE							
14	1640 - 674 - 205 - 00	WASHER							
15	1640 - 674 - 206 - 00	NUT							
16	1640 674 301 00	BOOT, SWITCH							
17	1563 623 530 - 00	RELAY,SP ASSY							
18	V210 300 001 00	BOLT M5 X WAXIE							

FIG. 62 HARNESS SYSTEM (S,V TYPE)

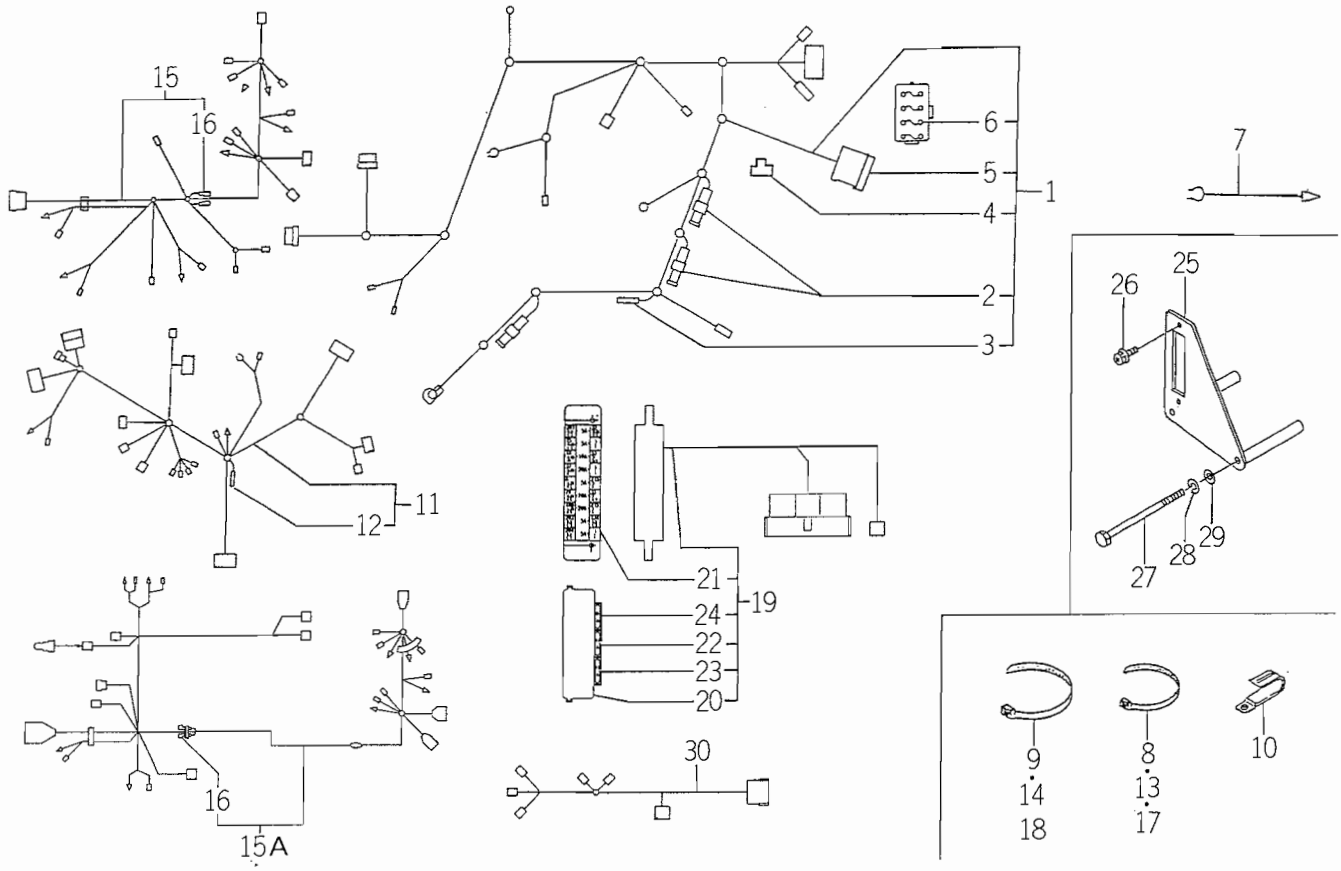

1688-690

KEY	PART CODE	DESCRIPTION	QTY	TYPE OF MODEL TMG18		ITC	COL	GRP	REMARKS
1	1682 - 690 - 300 - 30	HARNESS/ENGINE/E4	1	*					
2	1614 - 690 - 202 - 00	FUSE/SLOWBLOW	2	*					
3	1560 - 666 - 212 - 00	DIODE	2	*					
4	3650 - 261 - 261 - 00	LINK,FUSIBLE	1	*					
5	1593 - 623 - 503 - 00	CAP,FUSE BOX	1	*					
6	1560 - 664 - 264 - 00	FUSE,BLADE	4	*					
7	1600 - 624 - 004 - 00	HARNESS,OIL PRESSURE	1	*					
8	1376 - 402 - 003 - 00	BAND,WIRE/140	5	*					
9	1342 - 402 - 006 - 00	BAND,WIRE/250	1	*					
10	1425 - 621 - 004 - 00	CLAMP,HARNESS	1	*					
11	1682 - 690 - 310 - 30	HARNESS/MAIN/E4 ASSY	1	*					
12	1560 - 666 - 212 - 00	DIODE	1	*					
13	1376 - 402 - 003 - 00	BAND,WIRE/140	1	*					
14	1342 - 402 - 006 - 00	BAND,WIRE/250	1	*					
15	1688 - 690 - 620 - 00	HARNESS/REAR/VALVE	1	1--200					
15A	1688 - 690 - 620 - 10	HARNESS/REAR/SV ASSY	1	201-		1			
16	1560 - 666 - 212 - 00	DIODE	2	*					
17	1376 - 402 - 003 - 00	BAND,WIRE/140	1	*					
18	1342 - 402 - 006 - 00	BAND,WIRE/250	2	*					
19	1688 - 690 - 340 - 10	HARNESS/FUSE ASSY	1	*		1			
20	1650 - 650 - 246 - 00	COVER/FUSE	1	*					
21	1650 - 652 - 253 - 20	LABEL/FUSE/MAIN	1	*					
22	1575 - 623 - 010 - 00	FUSE/32V10A	2	*					
23	1593 - 623 - 203 - 00	FUSE/32V20A	4	*					
24	1560 - 664 - 264 - 00	FUSE,BLADE	6	*					

FIG. 62 HARNESS SYSTEM (S,V TYPE)

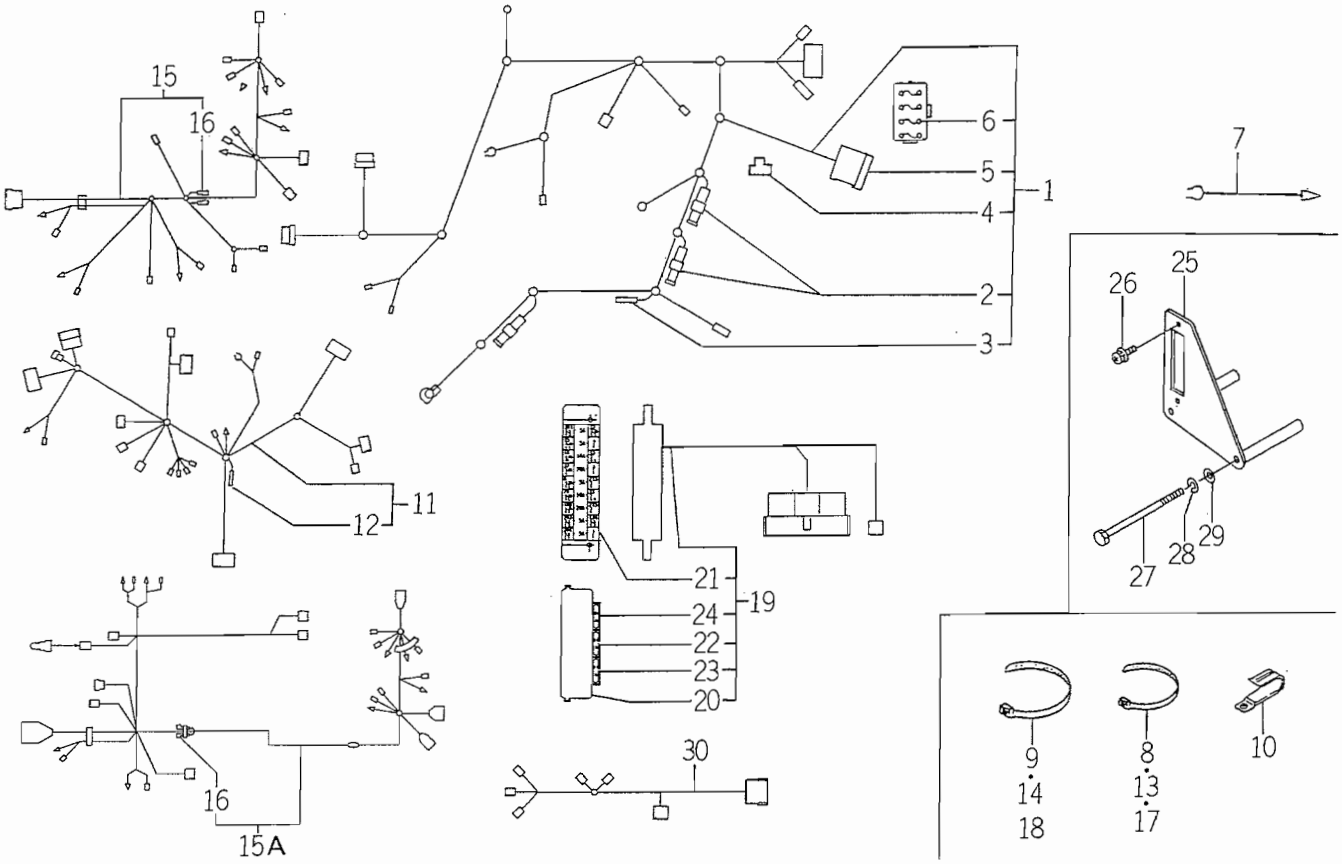

1688-690

KEY	PART CODE	DESCRIPTION	QTY	TYPE OF MODEL TMG18		ITC	COL	GRP	REMARKS
25	1682 - 690 - 360 - 10	BRACKET/FUSE COMP	1	*					
26	V120 - 366 - 001 - 60	SCREW	2	*					
27	V201 - 260 - 813 - 00	BOLT/M 8X130	2	*					
28	V401 - 160 - 008 - 00	WASHER,SP/M 8	2	*					
29	V411 - 260 - 008 - 00	WASHER,PL/M 8	2	*					
30	1682 - 690 - 240 - 10	HARNESS/PANEL/E ASSY	1	*					

FIG. 63 HARNESS SYSTEM (EXCEPT S,V TYPE)

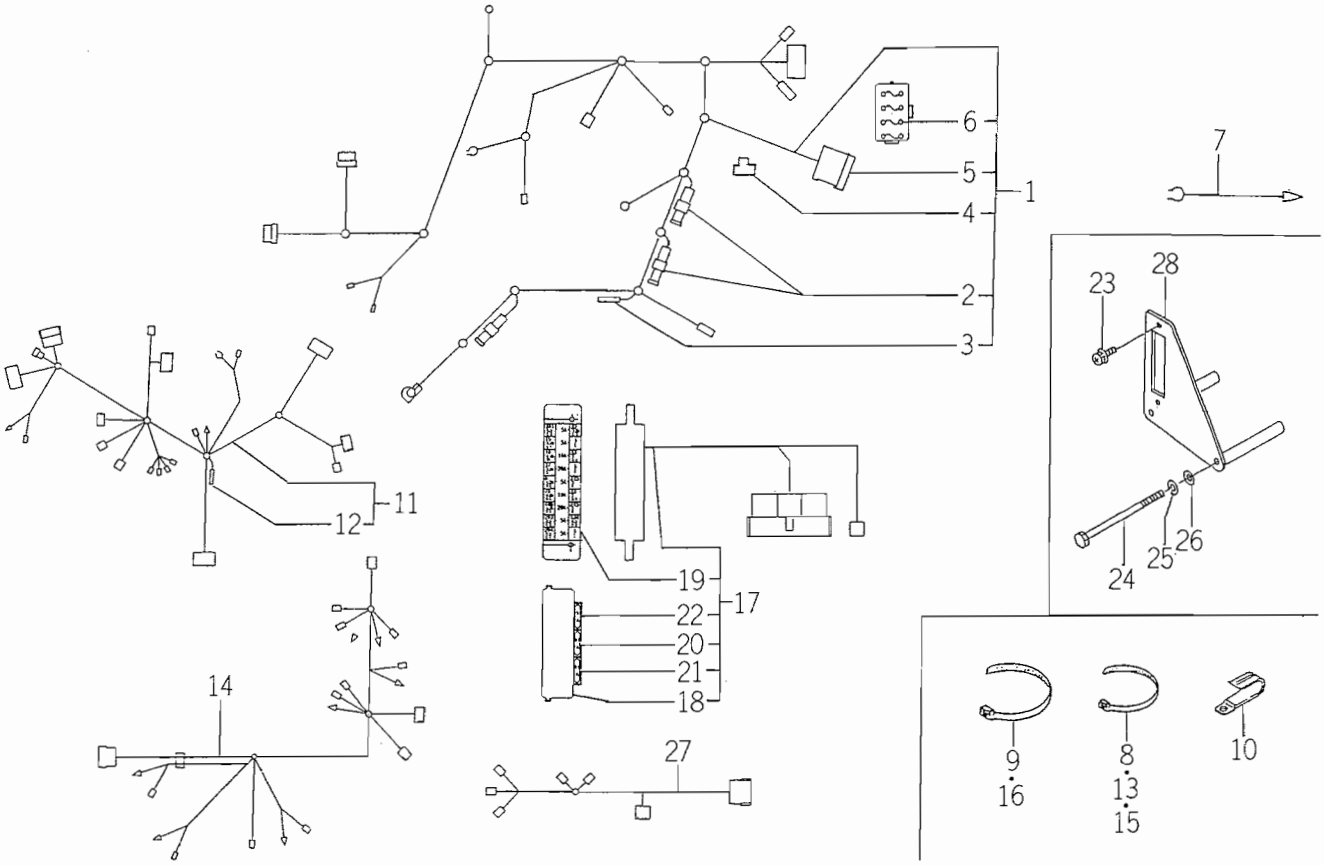

1683-690A

KEY	PART CODE	DESCRIPTION	QTY	TYPE OF MODEL TMG18		ITC	COL	GRP	REMARKS
1	1682 - 690 - 300 - 30	HARNESS/ENGINE/E4	1	*					
2	1614 - 690 - 202 - 00	FUSE/SLOWBLOW	2	*					
3	1560 - 666 - 212 - 00	DIODE	2	*					
4	3650 - 261 - 261 - 00	LINK,FUSIBLE	1	*					
5	1593 - 623 - 503 - 00	CAP,FUSE BOX	1	*					
6	1560 - 664 - 264 - 00	FUSE,BLADE	4	*					
7	1600 - 624 - 004 - 00	HARNESS,OIL PRESSURE	1	*					
8	1376 - 402 - 003 - 00	BAND,WIRE/140	8	*					
9	1342 - 402 - 006 - 00	BAND,WIRE/250	2	*					
10	1425 - 621 - 004 - 00	CLAMP,HARNESS	1	*					
11	1682 - 690 - 310 - 30	HARNESS/MAIN/E4 ASSY	1	*					
12	1560 - 666 - 212 - 00	DIODE	1	*					
13	1376 - 402 - 003 - 00	BAND,WIRE/140	1	*					
14	1683 - 690 - 620 - 10	HARNESS/REAR/E4 ASSY	1	*					
15	1376 - 402 - 003 - 00	BAND,WIRE/140	5	*					
16	1342 - 402 - 006 - 00	BAND,WIRE/250	1	*					
17	1688 - 690 - 340 - 10	HARNESS/FUSE ASSY	1	*					
18	1650 - 650 - 246 - 00	COVER/FUSE	1	*					
19	1650 - 652 - 253 - 20	LABEL/FUSE/MAIN	1	*					
20	1575 - 623 - 010 - 00	FUSE/32V10A	2	*					
21	1593 - 623 - 203 - 00	FUSE/32V20A	4	*					
22	1560 - 664 - 264 - 00	FUSE,BLADE	6	*					
23	V120 - 366 - 001 - 60	SCREW	2	*					
24	V201 - 260 - 813 - 00	BOLT/M 8X130	2	*					
25	V401 - 160 - 008 - 00	WASHER,SP/M 8	2	*					

FIG. 63 HARNESS SYSTEM (EXCEPT S,V TYPE)

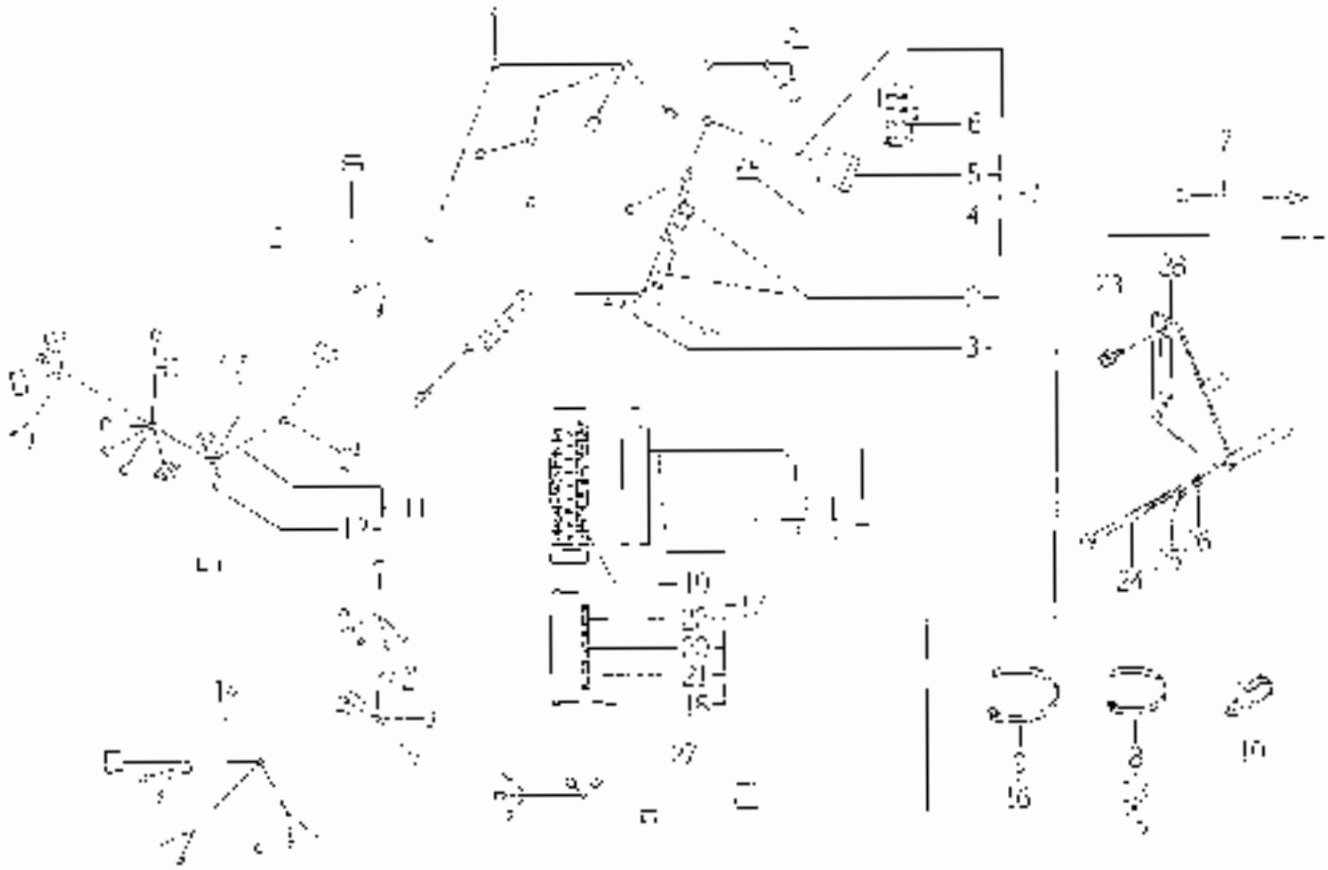

KEY	PART CODE	DESCRIPTION	QTY	TYPE OF MODEL			REMARKS
26	[illegible] 260 006 - 00	WASHER,FL/M 8	2				
27	1387 - 890 - 240 - 10	HARNESS/WIRE/E ASSY	1				
28	1562 690 350 10	BRACKET,FUSE [illegible]					

FIG. 64 ORNAMENT,LABEL

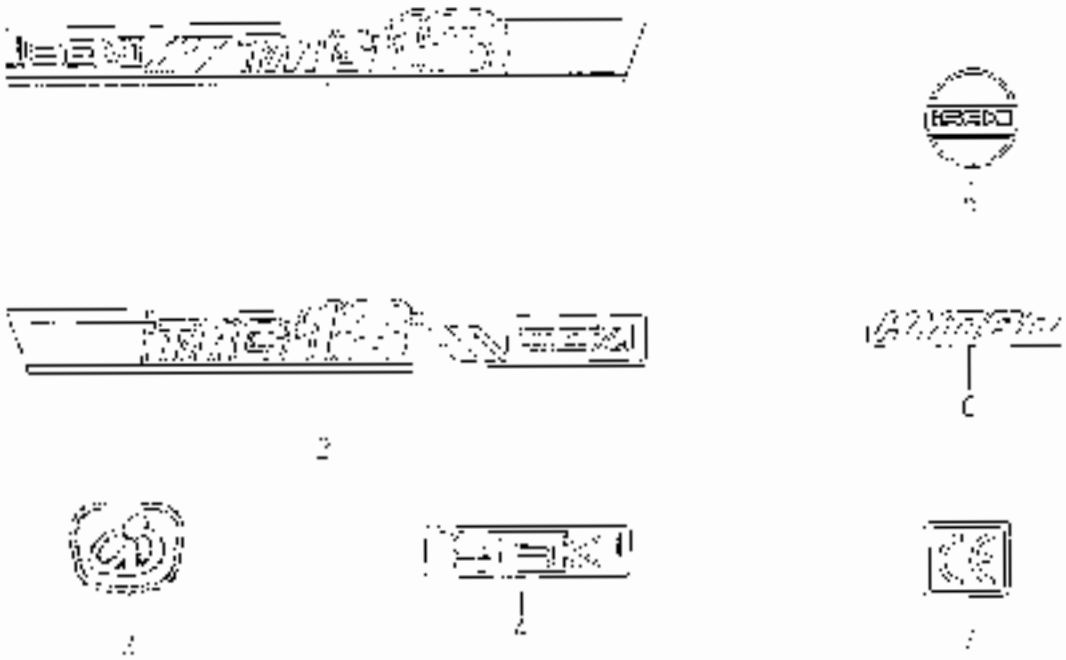

KEY	PART CODE	DESCRIPTION	QTY	TYPE OF MOTOR		I/C	COL	GRD	REMARKS
				TYPE					
1	1500 - 901 - 001 - 00	ORNAMENT/G 6/TP							
2	1098 - 901 - 002 - 00	ORNAMENT G 6/TP4	1						
3	1508 - 901 - 003 - 00	ORNAMENT/INFIN SYMBO	1						
4	1[illegible]8 - 901 - 006 - 00	ORNAMENT IGIK	1						
5	1575 - 901 - 004 - 00	ORNAMENT/STEERING							
6	1508 - 901 - 004 - 10	ORNAMENT/HYDRO							
7	2505 - 901 - 027 - 00	LABEL/CF							

FIG. 65 LABEL (CONTROL) (EXCEPT S,V TYPE)

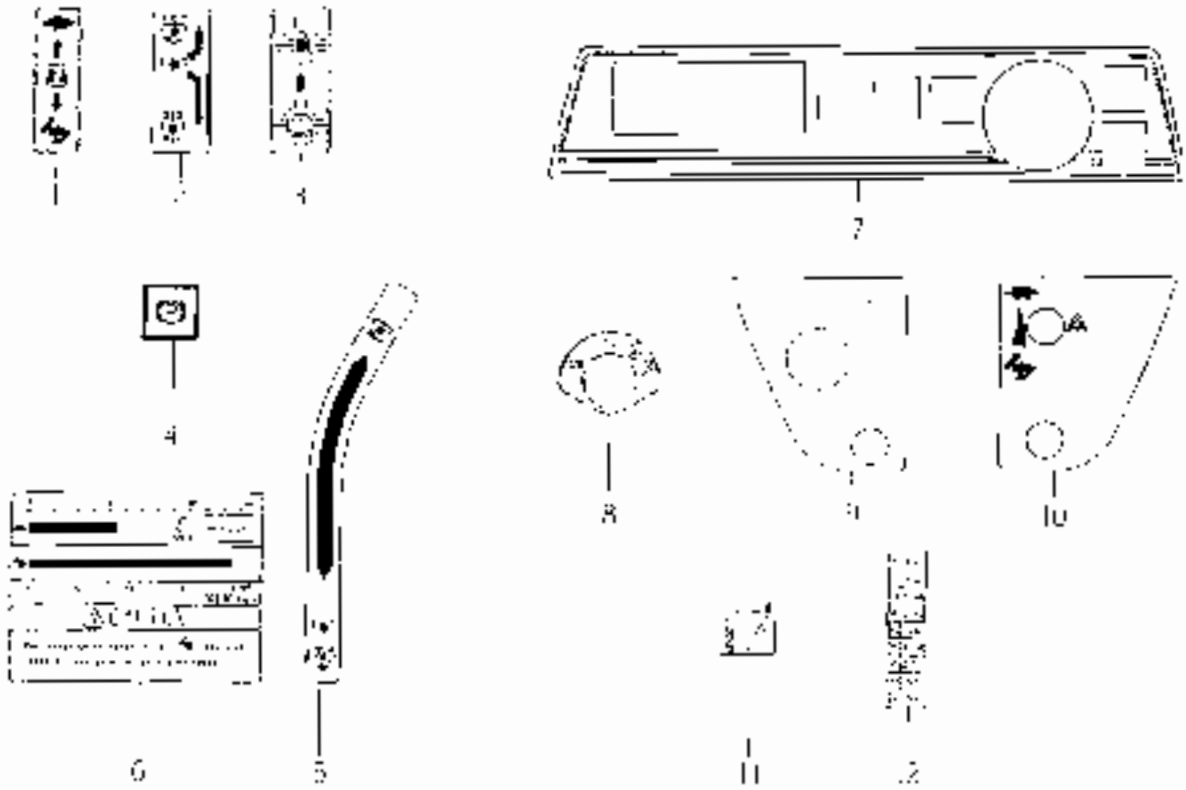

KEY	PART CODE	DESCRIPTION	QTY	TYPE OF MODEL	ITC	COL	GRP	REMARKS
1	893 - 002 - 001 - 00	ARF /CONTROL/SUB	1					
2	1802 - 002 - 002 - 00	ARF CONTROL/PTO	1					
3	1683 - 002 - 004 - 00	LABEL/DIP	1					
4	1682 - 002 - 014 - 00	LABEL/DIN AUX/PARKIN	1					
5	1683 - 002 - 003 - 00	LABEL/PTO/MID	1					
6	1688 - 002 - 005 - 00	LABEL/SPEED/HST	1					
7	1682 - 002 - 006 - 00	MOLDING METER	1					
8	1870 - 004 - 011 - 10	ARF /SWITCH/P	1					
9	1876 - 003 - 005 - 00	LABEL COLUMN/LH	1					
10	1852 - 002 - 004 - 00	LABEL/COLUMN/RH	1					
11	640 - 002 - 008 - 00	LABEL/KNOB/OPEN	1					
12	1652 - 002 - 007 - 20	LABEL/FUSE	1					

FIG. 66 LABEL (CONTROL) (V TYPE EXCEPT S)

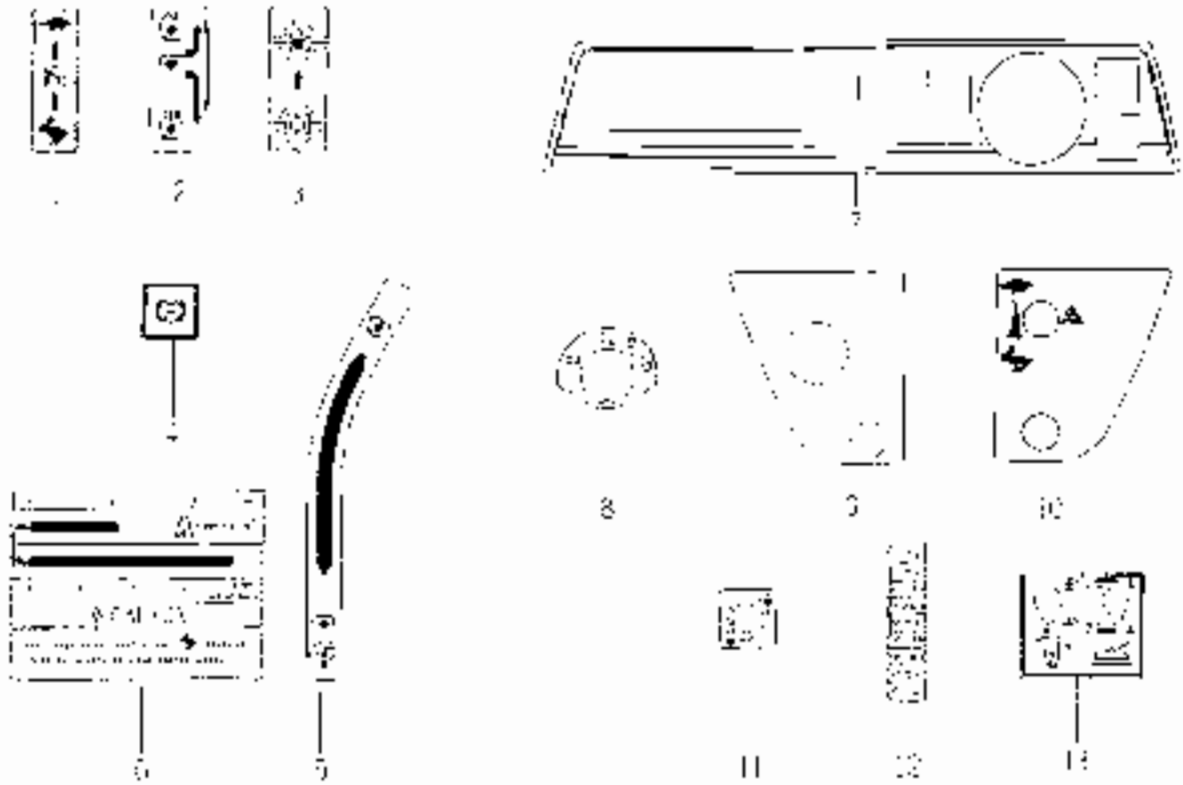

KEY	PART CODE	DESCRIPTION	QTY	TYPE OF MODEL			COL	HRP	REMARKS
1	1583 - 902 - 001 - 00	LABEL/CONTROL/KUR	1						
2	1633 - 902 - 002 - 00	LABEL/CONTROL/PTC	1						
3	1683 - 902 - 004 - 00	LABEL/D--	1						
4	1682 - 902 - 014 - 00	LABEL/CONTROL/PARK	1						
5	1683 - 902 - 001 - 00	LABEL/VTO/MID	1						
6	1683 - 902 - 005 - 00	LABEL/WHEEL/FLT	1						
7	1682 - 902 - 000 - 00	MOLDING/METER	1						
8	1620 - 904 - 011 - 10	LABEL/SWITCH 2	1						
9	1620 - 903 - 003 - 00	LABEL/COLUMN L-	1						
10	1682 - 902 - 004 - 00	LABEL/COLUMN R4	1						
	1640 - 902 - 006 - 00	LABEL/KNOB/COPON							
12	1582 - 902 - 007 - 20	LABEL/FUSE	1						
3	1688 - 902 - 001 - 00	LABEL/SWITCH/VTO							

FIG. 67 LABEL (CONTROL) (S TYPE)

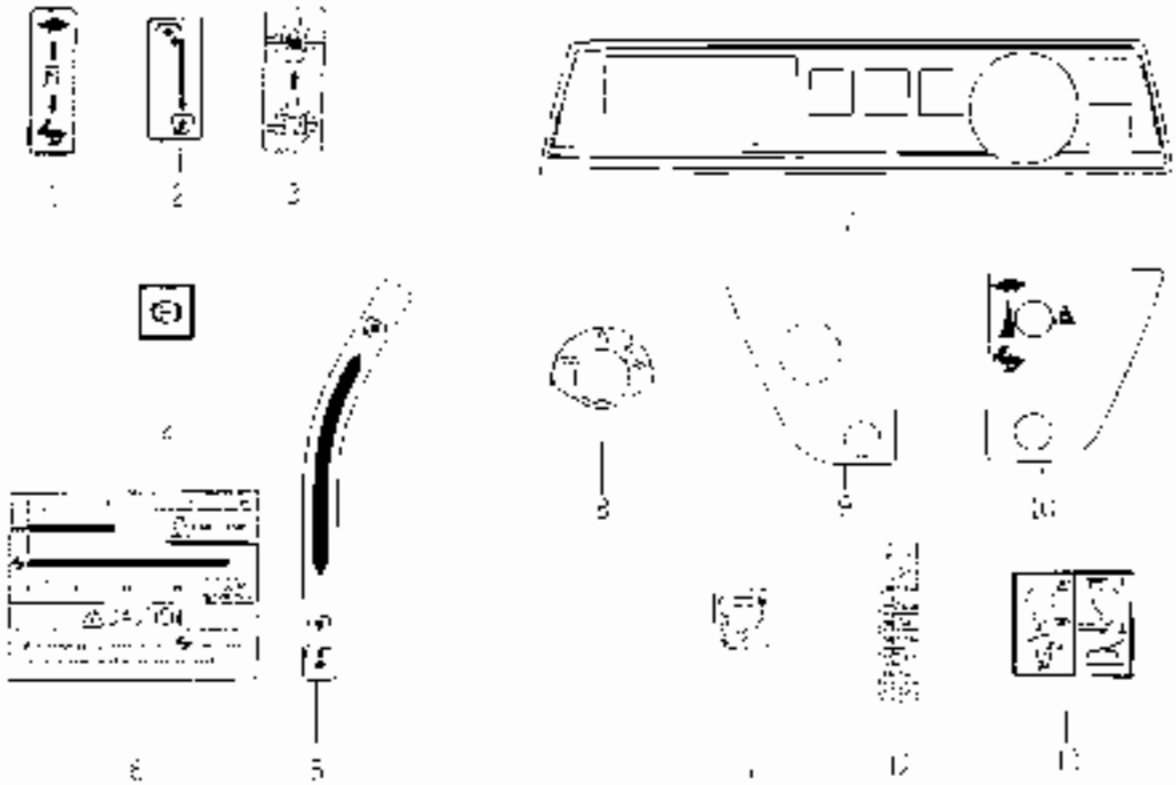

KEY	PART CODE	DESCRIPTION	QTY	ITEM OF MODIFICATION			REMARKS
1	1683-902-001-00	LABEL/CONTROL/SUB	1				
2	1051-902-000-00	LABEL/CONTROL/PTO					
3	1683-902-004-00	LABEL/OFF					
4	1687-902-014-00	LABEL/CONTROL PARKING					
5	1683-902-003-00	LABEL/PTO LED					
6	1683-902-005-00	LABEL/SPEED/HI					
7	1683-902-006-00	LABEL/HOLDING VALVE					
8	1676-004-01 -10	LABEL/SWITCH/F					
9	1020-003-003-00	LABEL/COLUMN/DI					
10	1687-002-004-00	LABEL/COLUMN/RE					
	640-002-000-00	LABEL/RIGHT/OPEN					
12	1687-002-007-00	LABEL/FUEL					
13	1688-902-002-00	LABEL/WHICH PTO					

FIG. 68 LABEL (ENGLISH) (OPTION)

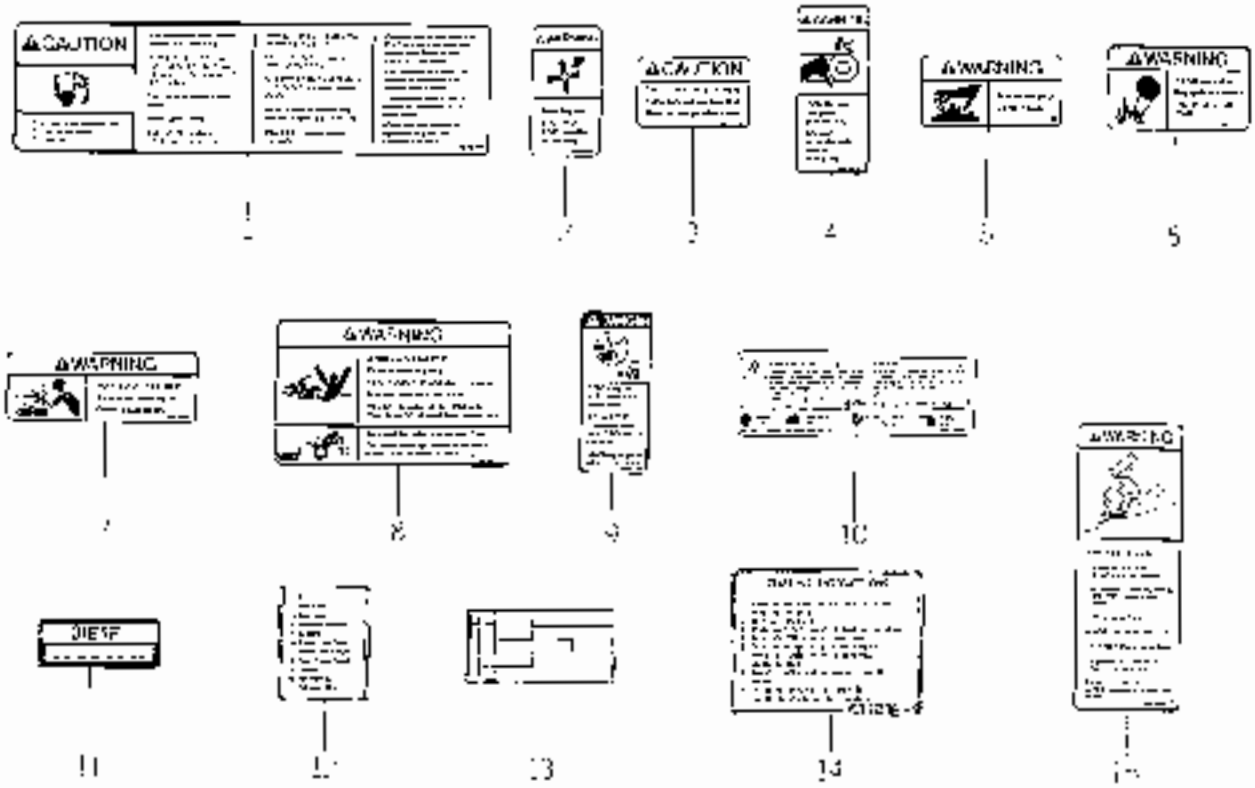

KEY	PART CODE	DESCRIPTION	QTY	TYPE OF MODEL TV919		CODE	GRP	REMARKS
1	1640 - 904 - 007 - 00	LABEL/W/DRIVER	1	T				
2	1640 - 904 - 006 - 00	LABEL/W/FAN	2	T				
3	1640 - 904 - 007 - 00	ABEL/W/BATTERY	1	T				
4	1640 - 904 - 008 - 00	LABEL/W/SHIELD	2	T				
5	1640 - 904 - 009 - 10	ABEL/W/MUFFLER	1	T				
6	1640 - 904 - 011 - 00	LABEL/W/ETHER	1	T				
7	1640 - 904 - 012 - 00	LABEL/W/RADIATOR	1	T				
8	1640 - 904 - 013 - 00	LABEL/W/SHIELD/PTO	1	T				
9	1640 - 904 - 014 - 00	LABEL/W/STARTER	1	T				
10	1640 - 904 - 016 - 00	ABEL/W/BATTERY	1	T				
11	1427 - 941 - 010 - 00	MARK/FUEL	1	T				
12	1640 - 904 - 009 - 00	LABEL/FUSE/	1	T				
13	1594 - 904 - 025 - 00	MARK/DIESEL	1	T				
14	1640 - 904 - 006 - 10	LABEL/STARTER	1	T				
15	1640 - 903 - 045 - 00	LABEL/W/ROPS	1	T				

FIG. 69 LABEL (FRENCH) (OPTION)

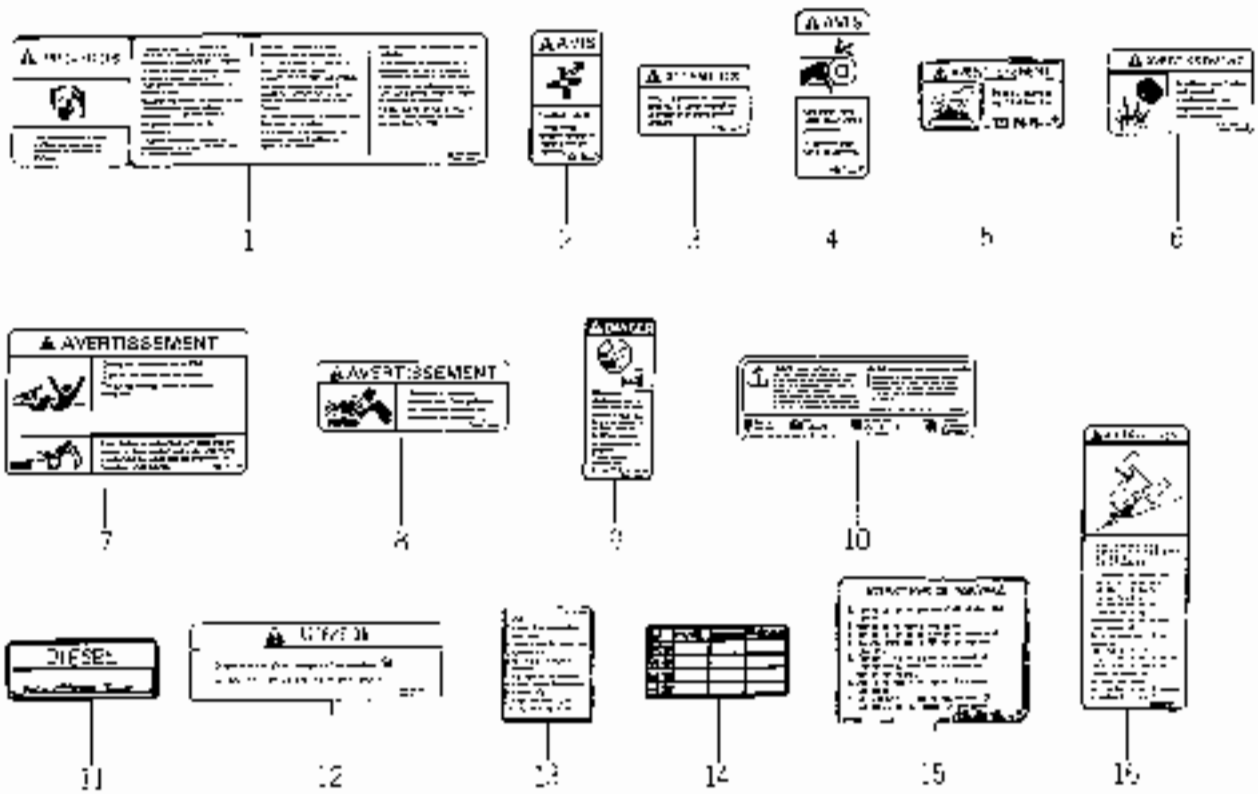

KEY	PART CODE	DESCRIPTION	QTY	TYPE OF MODEL TS610		C O L	G R P	REMARKS
1	1640-004-029-10	LABEL C/DRIVE F	1					
2	1640-903-000-00	LABEL/W FAN	2					
3	1640-903-007-00	LABEL C/BATTERY	1					
4	1640-903-008-00	LABEL/W SHIELD	2					
5	1640-903-009-00	LABEL/W/MUFFLER	1					
6	1640-903-011-00	LABEL/W/ENGINE	1					
7	1640-903-012-00	LABEL W/SPEED/HIG	1					
8	1640-903-013-00	LABEL/W RADIATOR	1					
9	1640-903-015-00	LABEL D/STARTER	1					
10	1640-903-016-00	LABEL/D/BATTERY	1					
11	1427-894-013-00	MARK FUEL/13	1					
12	1640-903-019-10	LABEL/C/SHIFT	1					
13	1670-904-007-00	LABEL/FUSE/11	1					
14	1004-004-021-00	MARK JOC/4	1					
15	1640-903-005-10	LABEL/START/F	1					
16	1640-903-046-00	LABEL/W/DOPS/FSC	1					

FIG. 70 LABEL (GERMAN) (OPTION)

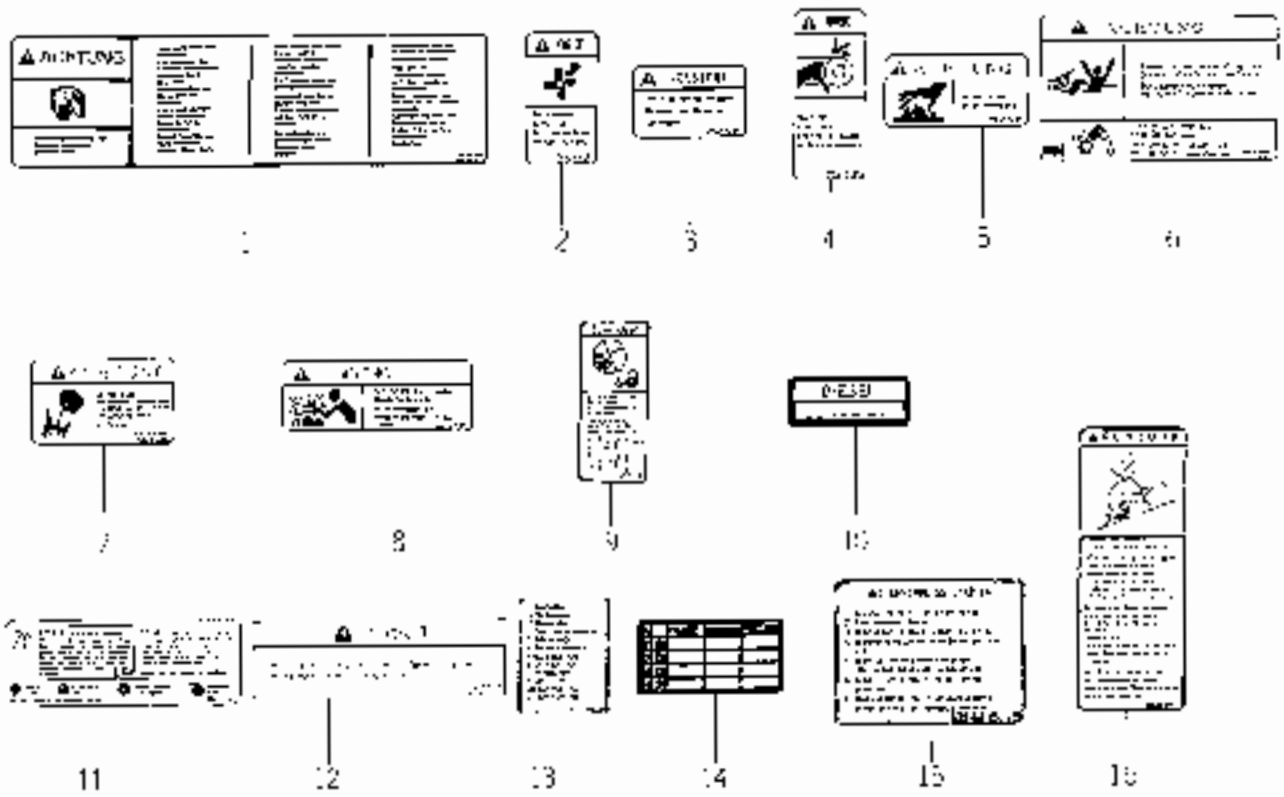

KEY	PART CODE	DESCRIPTION	QTY	TYPE OF MODEL					REMARKS
1	1640 - 904 - 024 - 00	LABEL/C/DRIVE		T					
2	1640 - 903 - 025 - 00	LABEL/W/FAN	2	T					
3	1640 - 903 - 027 - 00	LABEL/C/BATTERY		T					
4	1640 - 903 - 029 - 00	LABEL/W/SPOLD	2	T					
5	1640 - 903 - 030 - 00	LABEL/W/MUFFLER		T					
6	1640 - 903 - 031 - 00	LABEL/W/SPOLD-TO	1	T					
7	1640 - 903 - 032 - 00	LABEL/W/OTHER	1	T					
8	1640 - 903 - 033 - 00	LABEL/W/RADIATOR	1	T					
9	1640 - 903 - 035 - 00	LABEL/D/STARTER	1	T					
10	1640 - 902 - 073 - 00	LABEL/FUEL/D	1	T					
11	1640 - 903 - 036 - 00	LABEL/D/BATTERY	1	T					
12	1640 - 903 - 038 - 00	LABEL/C/SPR		T					
13	1640 - 904 - 008 - 00	LABEL/FUSE/H		T					
14	1640 - 904 - 009 - 00	MARKING/H	1	T					
15	1640 - 903 - 025 - 10	LABEL/STAB/C	1	T					
16	1640 - 903 - 047 - 00	LABEL/W/TOPS/120	1	T					

FIG. 71 LABEL (PORTUGAL) (OPTION)

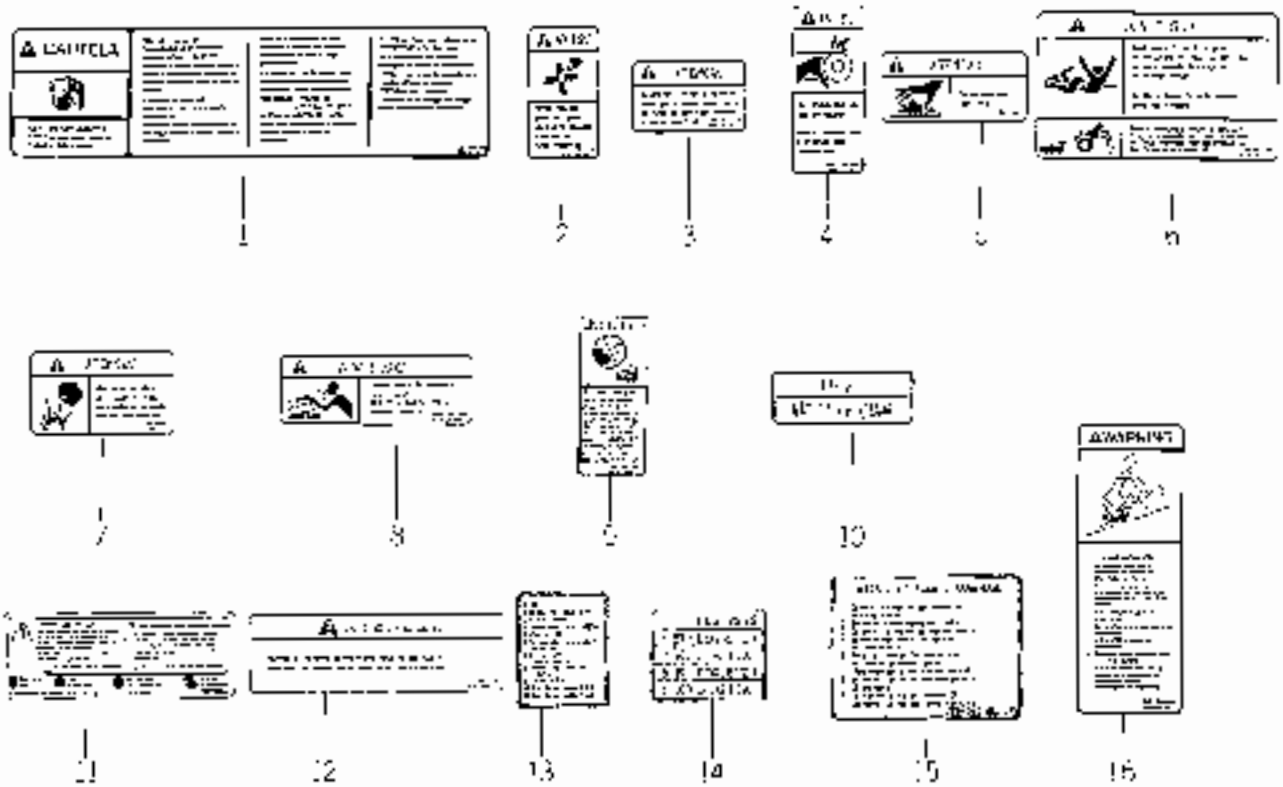

KEY	PART CODE	DESCRIPTION	QTY	TYPE OF MODEL				REMARKS
1	1640 - 903 - 035 - 00	LABEL/C/DRIVE/P	1					
2	1640 - 903 - 056 - 00	LABEL/W/FAN	2					
3	1640 - 903 - 057 - 00	LABEL/C/BATTERY	1					
4	1640 - 903 - 036 - 00	LABEL/W/SHIELD	2					
5	1640 - 903 - 059 - 00	LABEL/W/MUFFLER	1					
6	1640 - 903 - 062 - 00	LABEL/W/SHIELD/PTO	1					
7	1640 - 903 - 00 - 00	LABEL/W/CTLGR	1					
8	1640 - 903 - 063 - 00	LABEL/W/RADIATOR	1					
9	1640 - 903 - 065 - 00	LABEL/D/STARTER	1					
10	1640 - 903 - 067 - 00	LABEL/FUEL/P	1					
11	1640 - 903 - 055 - 00	LABEL/D/BATTERY	1					
12	1640 - 903 - 080 - 00	LABEL/C/SLIFT	1					
13	1640 - 903 - 069 - 00	LABEL/FUSE/1	1					
14	1640 - 903 - 052 - 00	LABEL/FUSE/4	1					
15	1640 - 903 - 000 - 00	LABEL/STAR/P	1					
16	1640 - 903 - 048 - 00	LABEL/W/HOPS BAIF	1					

FIG. 72 LABEL (E40A) (OPTION)

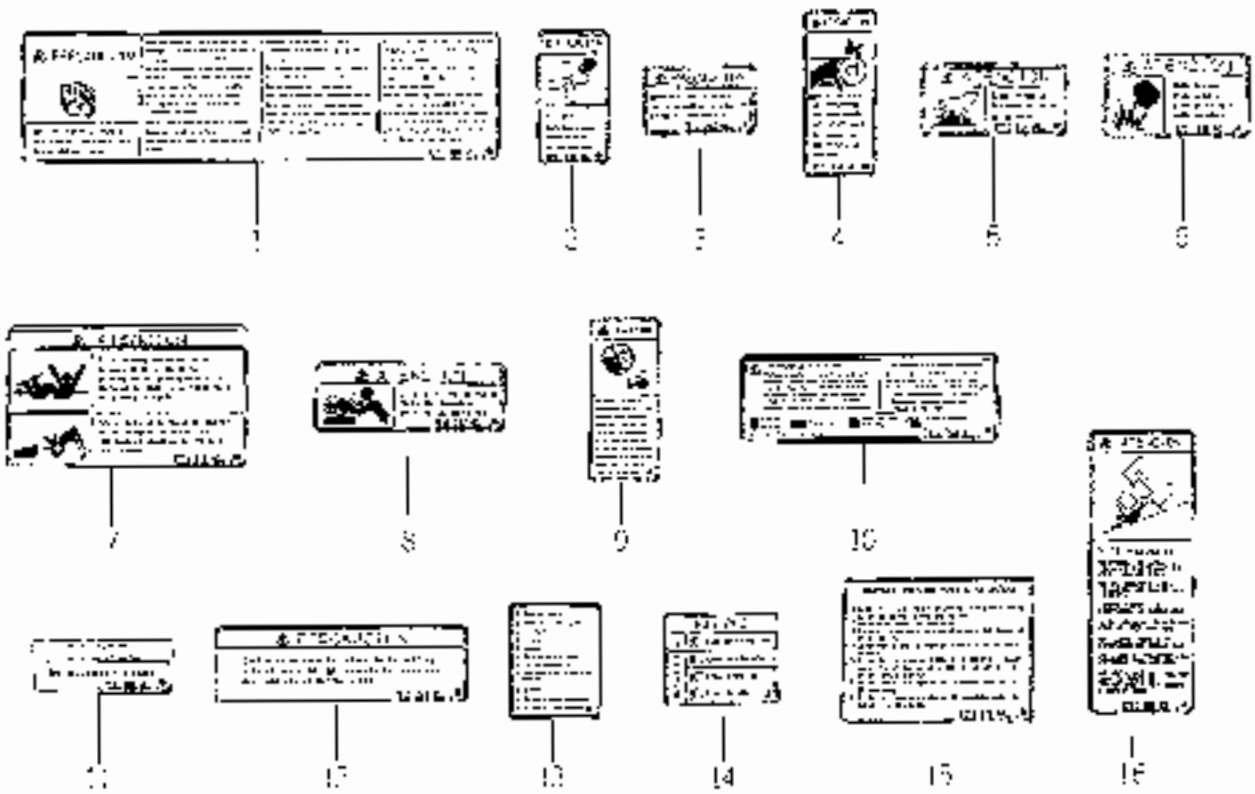

KEY	PART CODE	DESCRIPTION	QTY	TYPE OF MODEL								REMARKS
1	1640 - 904 - 076 - 00	LABEL/C/DRIVT/A	1									
2	1640 - 903 - 076 - 00	LABEL/W/FAN/A	2									
3	1640 - 903 - 077 - 00	LABEL/C/BATTRY/A	1									
4	1640 - 903 - 078 - 00	LABEL/W/SHIELD/A	2									
5	1640 - 903 - 079 - 00	LABEL/W/MUFFLER/A	1									
6	1640 - 903 - 081 - 00	LABEL/W/FTHER/A	1									
7	1640 - 903 - 082 - 00	LABEL/W/SHIELD/STD/A	1									
8	1640 - 903 - 083 - 00	LABEL/W/RADIATOR/A	1									
9	1640 - 903 - 085 - 00	LABEL/D/STARTER/A	1									
10	1640 - 903 - 086 - 00	LABEL/D/BATTERY/A	1									
11	1640 - 903 - 087 - 00	LABEL/FUEL/A	1									
12	1640 - 903 - 090 - 00	LABEL/C/SHIELD/A	1									
13	1640 - 904 - 012 - 00	LABEL/D/FILTER/A	1									
14	1640 - 903 - 073 - 00	LABEL/GLSS/W/A	1	T								
15	1640 - 903 - 075 - 10	LABEL/START/A	1	T								
16	1640 - 903 - 091 - 00	LABEL/W/HOPS/A	1	T								

FIG. 73 LABEL (E40T) (OPTION)

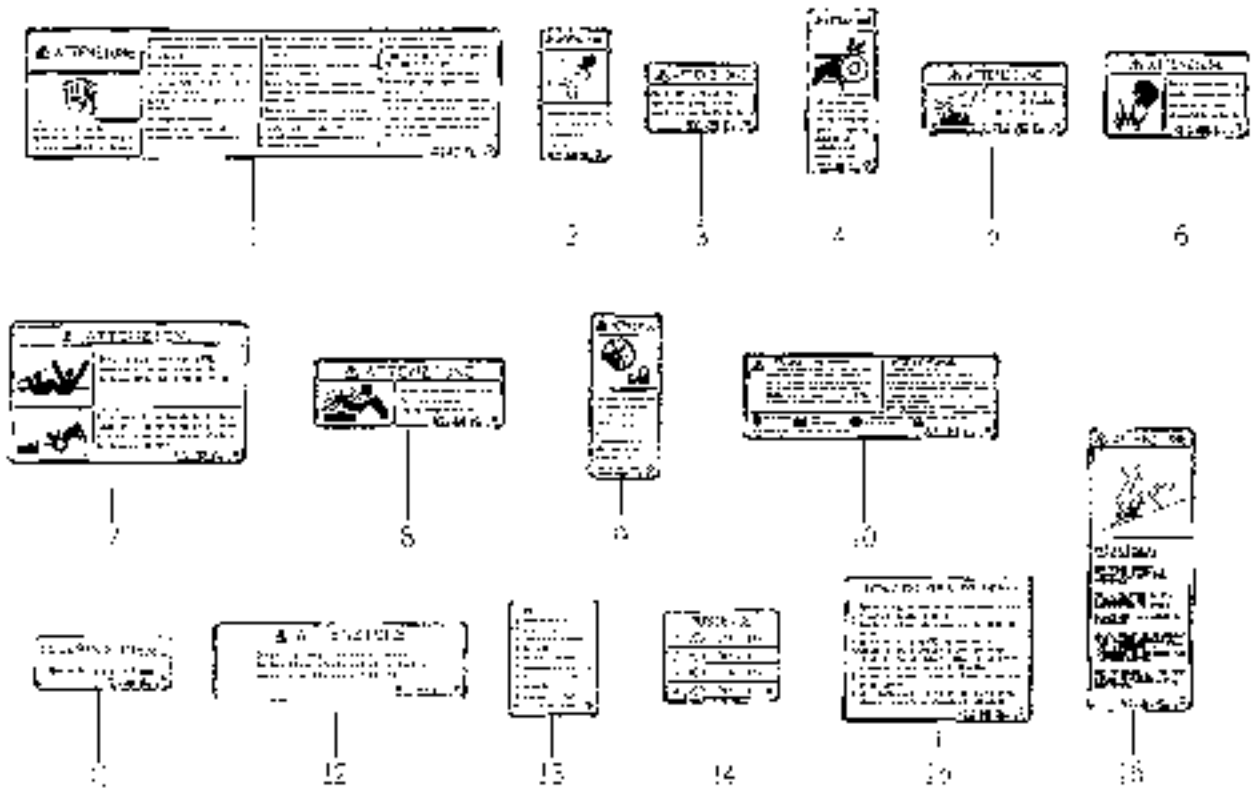

KEY	PART CODE	DESCRIPTION	QTY	TYPE OF MODEL TWGIB		C	C O L	G R P	REMARKS
1	1840 - 904 - 007 - 00	LABEL/CAUTION/T							
2	1840 - 905 - 006 - 00	LABEL/W/FAN/T	2						
3	1840 - 905 - 007 - 00	LABEL/CAUTION/BATTERY/T	1						
4	1840 - 905 - 008 - 00	LABEL/W/SHIELD/T	2						
5	1840 - 905 - 009 - 00	LABEL/W/MUFFLER/T							
6	1840 - 905 - 011 - 00	LABEL/W/STEP/							
7	1840 - 905 - 012 - 00	LABEL/W/SHIELD/PTO/T							
8	1840 - 905 - 013 - 00	LABEL/W/RADIATOR/T							
9	1840 - 905 - 015 - 00	LABEL/W/STARTER/T							
10	1840 - 905 - 016 - 00	LABEL/W/BATTERY/T							
11	1840 - 905 - 017 - 00	LABEL/FUEL/T							
12	1840 - 905 - 018 - 00	LABEL/C/FIRST/T							
13	1840 - 904 - 013 - 00	LABEL/FUSE/1/T							
14	1840 - 905 - 002 - 00	LABEL/FUSE/2/T							
15	1840 - 905 - 005 - 00	LABEL/START/T							
16	1840 - 903 - 002 - 00	LABEL/W/DOPS/T							

FIG. 74 LABEL (DUTCH) (OPTION)

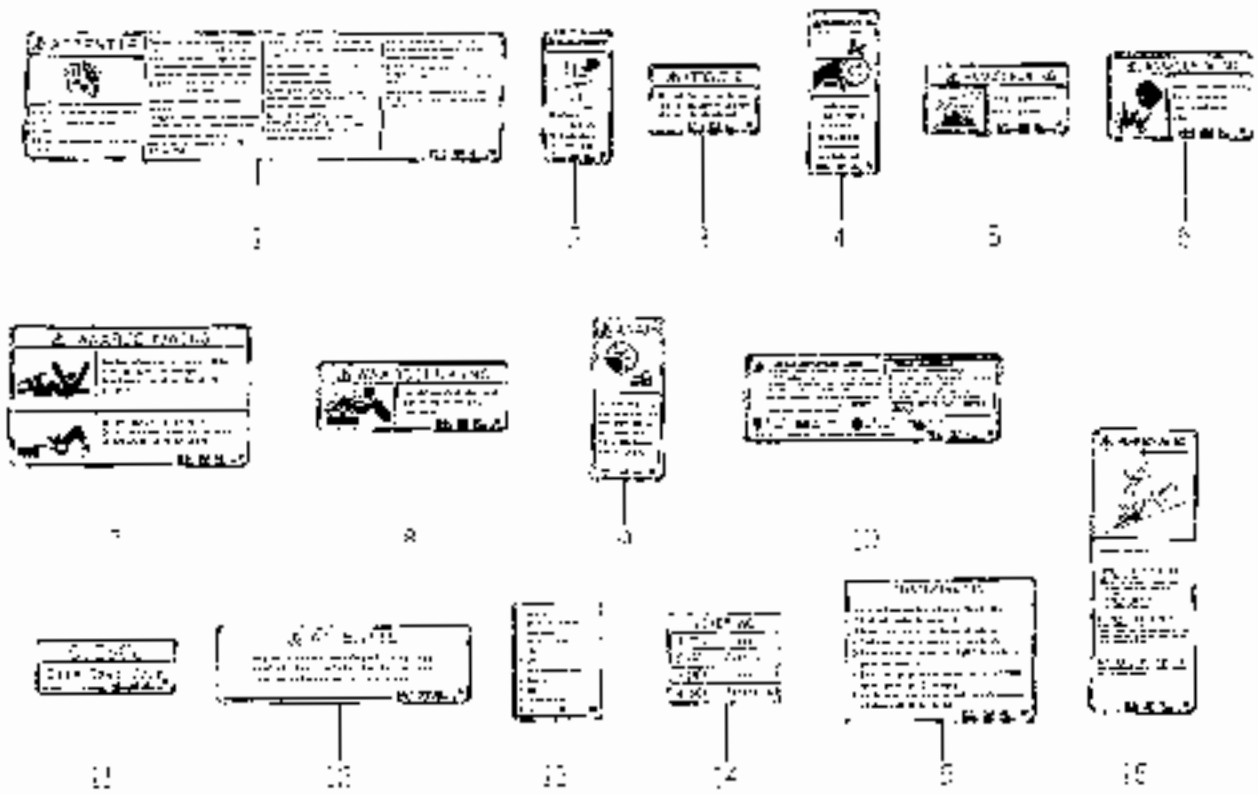

KEY	PART CODE	DESCRIPTION	QTY	TYPE OF MODE					REMARKS
1	1640 - 904 - 028 - 00	LABEL/C/DRIVE/H	1	T					
2	1640 - 905 - 028 - 00	LABEL W/FAN/H	2	T					
3	1640 - 905 - 027 - 00	LABEL/C/DA TEN/H	1	T					
4	1640 - 905 - 028 - 00	LABEL/W/SHIELD/H	2	T					
5	1640 - 905 - 028 - 00	LABEL A/MAJ LIN/H		T					
6	1640 - 905 - 031 - 00	LABEL/W/CTHOD/H	1	T					
7	1640 - 905 - 032 - 00	LABEL W/SHIELD/FTC/H	1	T					
8	1640 - 905 - 033 - 00	LABEL/W/RADIATOR/H		T					
9	1640 - 905 - 035 - 00	LABEL D/S ARTER/H		T					
10	1640 - 905 - 036 - 00	LABEL/C/DA TEN/H		T					
11	1640 - 905 - 037 - 00	LABEL/TUCL/H	1	T					
12	1640 - 905 - 039 - 00	LABEL/C/SH ILD/H	1	T					
13	1640 - 904 - 014 - 00	LABEL/TUCL/H/H	1	T					
14	1640 - 905 - 010 - 00	LABEL/-JOS/A/H	1	T					
15	1640 - 905 - 025 - 10	LABEL/START/H	1	T					
16	1640 - 903 - 093 - 00	LABEL/W/ROPS/H	1						

FIG. 75 LABEL (E40V) (OPTION)

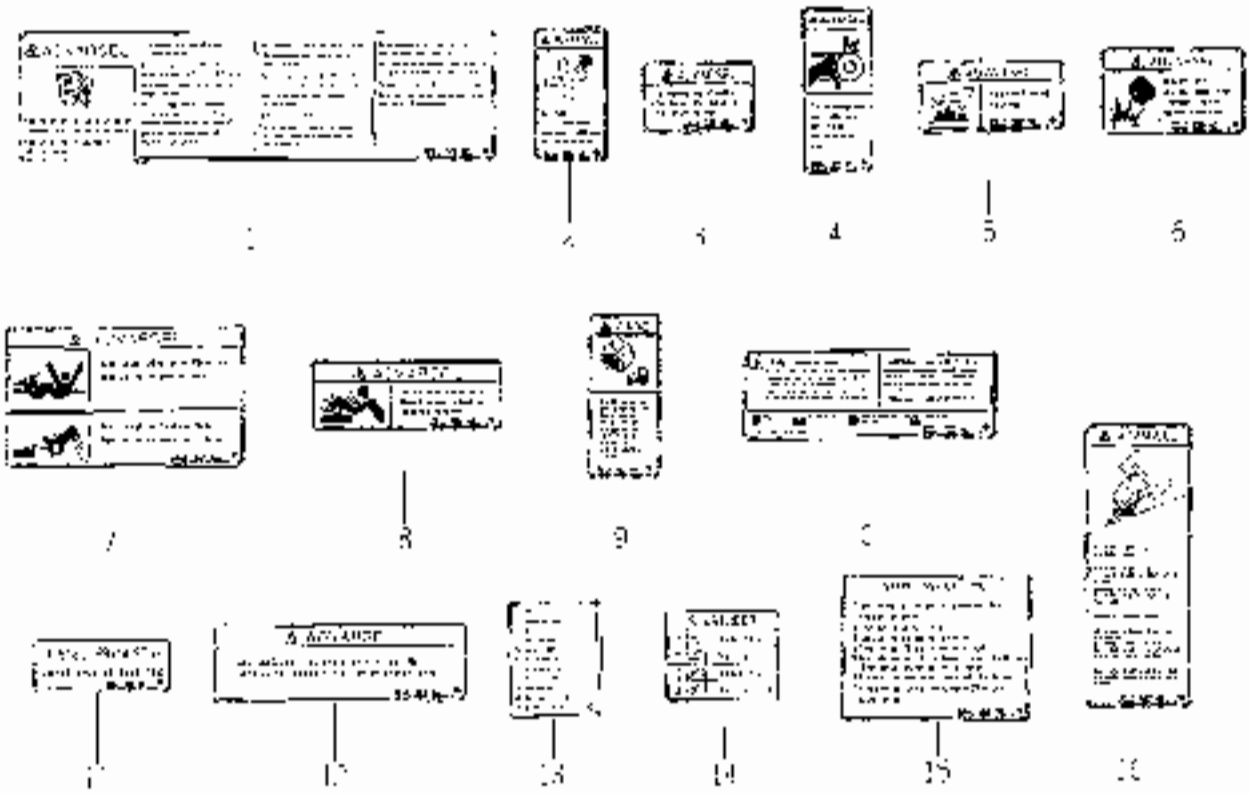

KEY	PART CODE	DESCRIPTION	QTY	TYPE OF MODEL				REMARKS
				TYPE	C	COL	GRP	
1	1640-904-020-00	LABEL/C DRIVE/V	1	T				
2	1640-905-045-00	LABEL/W/FAN/V	2	T				
3	1640-905-047-00	LABEL/C/BATTERY/V	1	T				
4	1640-905-048-00	LABEL/W DRIVE/V	2	T				
5	1640-905-049-00	LABEL/W/SHUTTER/V	1	T				
6	1640-905-051-00	LABEL/W STOP/V	1	T				
7	1640-905-052-00	LABEL/W/SHUTTER PTC/V	1	T				
8	1640-905-053-00	ABF/W RADIATOR/V	1	T				
9	1640-905-055-00	LABEL/C/STARTER/V	1	T				
10	1640-905-056-00	LABEL/C/BATTERY/V	1	T				
11	1640-905-057-00	LABEL/ OIL/V	1	T				
12	1640-905-058-00	LABEL/C/SHUTTER/V	1	T				
13	1640-904-015-00	LABEL/FUSE/11.V	1	T				
14	1640-905-042-00	LABEL/FUSE/4/V	1	T				
15	1640-905-043-00	LABEL STAND/V	1	T				
16	1640-905-004-00	LABEL/W/POPO/V	1	T				

FIG. 76 TOOL

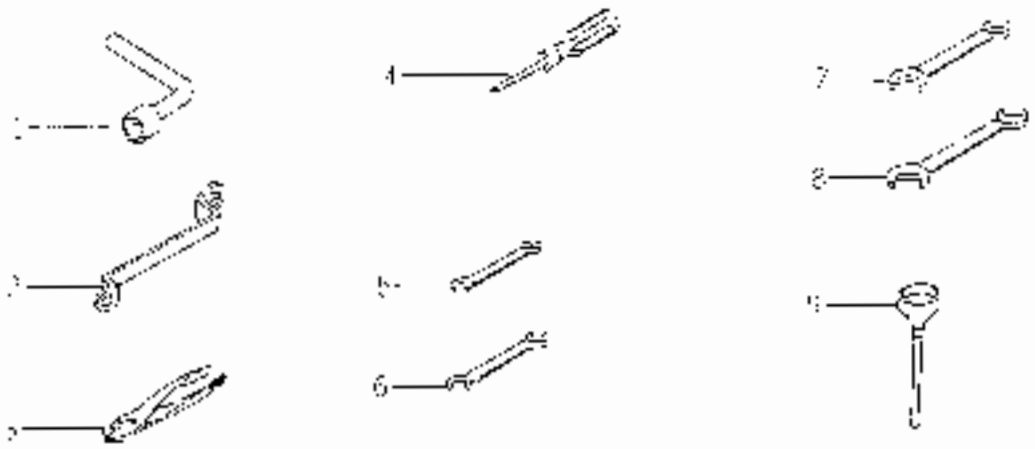

KEY	PART CODE	DESCRIPTION	QTY	TYPE OF MODEL						REMARKS
1	1421 - 000 - 001 - 00	SPANNER/22	1							
2	1401 - 005 - 005 - 00	WRENCH,SOCKET 17X19	1							
3	V960 - 150 - 015 - 00	PLIERS, G 50	1							
4	2130 - 551 - 210 - 00	SCREWDRIVER ASSY	1							
5	V920 - 551 - 801 - 00	SPANNER/ 8X10	1							
6	V920 - 551 - 201 - 40	SPANNER 12X14	1							
7	V920 - 551 - 301 - 70	SPANNER/ 16X 17								
8	V920 - 551 - 907 - 20	SPANNER/ 19X22								
9	2130 - 551 - 700 - 00	FUNNEL, ASSY								

FIG. 77 COMPONENT PARTS FOR K200 – 053 – 000 – 00 ON Fig.45

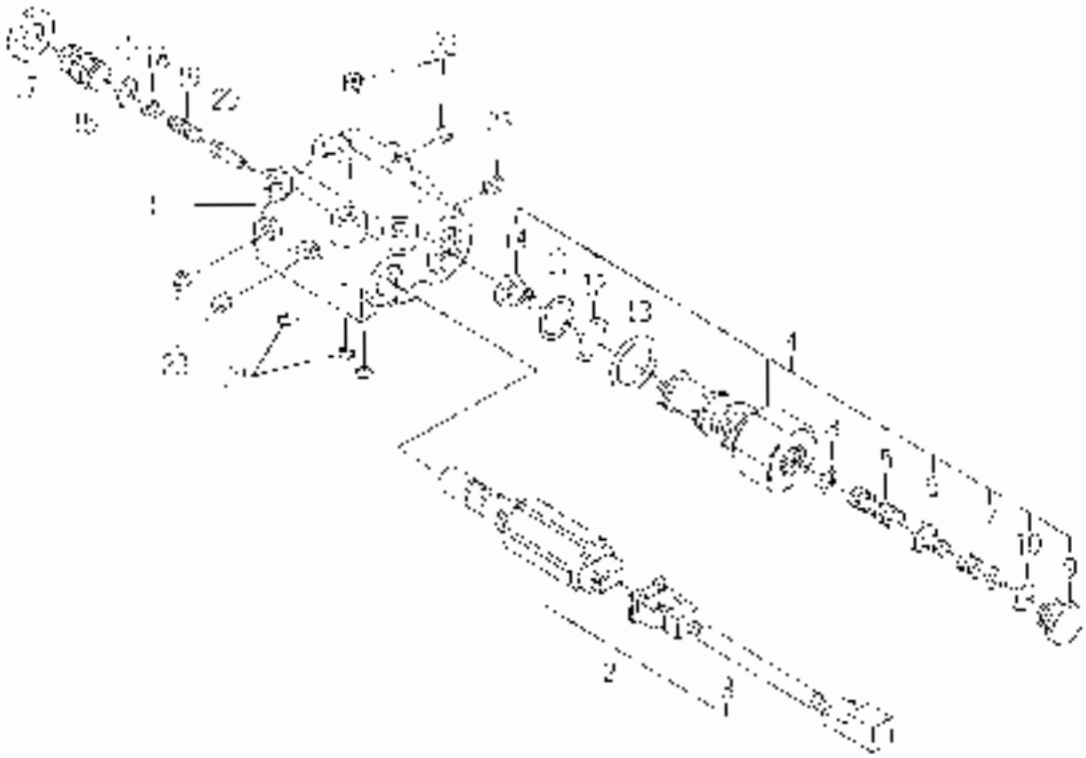

KEY	PART CODE	DESCRIPTION	QTY	TYPE OF MODEL				REMARKS
1	K200 – 053 – 000 – 00	BODY/HYAT 053	1					
2	K200 053 100 00	VALVE SOLENOID, NC 5[illegible]	1					
3	K200 – 053 – 102 – 00	HARNESS/PA/DUC	1					
4	K223 – 005 000 00	VALVE/FLOWN ASSY	1					
5	K211 005 001 00	SPOOL/FLOWN/1.19	1					
6	K211 – 007 – 003 – 00	SPRING/BUOY	1					
7	K233 007 – 004 00	SPRING/HOOP	1					
8	K233 007 005 – 00	SPOOL/STOPPER	1					
9	K211 – 008 – 011 – 00	PLUG						
10	V720 – 112 – 401 – 40	O – RING/P14						
11	V720 – 112 – 201 – 50	O – RING, P18						
12	V720 – 112 402 00	O RING/P20						
13	V720 – 113 – 502 – 50	RING O						
14	1050 – 506 – 002 – 00	F TPF/UNE/12A 8X15						
15	K200 – 031 005 00	SCREW/F						
16	V720 – 102 201 20	O – RING, P12						
17	K250 – 001 – 007 – 00	NUT	1					
18	K200 053 007 – 00	PLA E/SPRING						
19	K700 005 006 00	SPRING/HOOD						
20	K 90 – 001 – 207 10	PORTT						
21	V720 – 111 800 70	O RING/P 7	3					
22	V780 – 140 – 000 – 27	PLUG/SCREW/SEAL	2					
23	V780 – 140 – 000 – [illegible]	PLUG/SCREW/SEAL	3					

FIG. 78 COMPONENT PARTS FOR K233－003－000－00 ON Fig.38

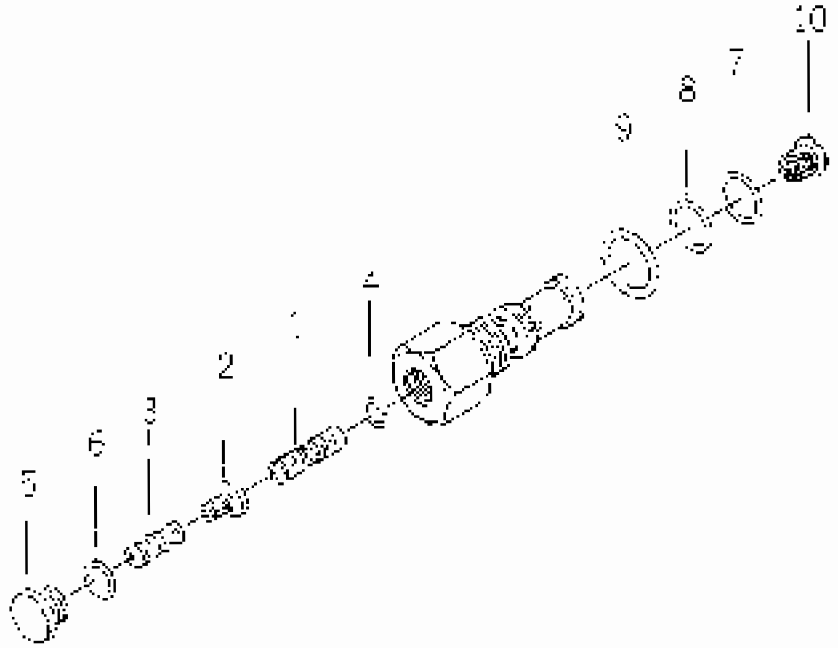

KEY	PART CODE	DESCRIPTION	QTY	TYPE OF MODEL TNG 5	I G	C O	G R P	REMARKS
1	K233－003－001－00	BODY [illegible]	1					
2	K233－003－003－00	SPRING/GUIDE	1					
3	K233－003－004－00	SPRING/H0027	1					
4	K233－003－005－00	SPOOL/STOPPER	1					
5	K211－008－011－00	PLUG	1					
6	9720－112－401－40	O－RING/P14	1					
7	9720－112－401－80	O－RING/P18	1					
8	9720－112－402－00	O－RING/P20						
9	9720－113－502－60	RING－O						
10	7550－508－007－00	FILTER [illegible]/12X18X15						

FIG. 79 COMPONENT PARTS FOR K233 – 006 – 000 – 00 ON Fig.39

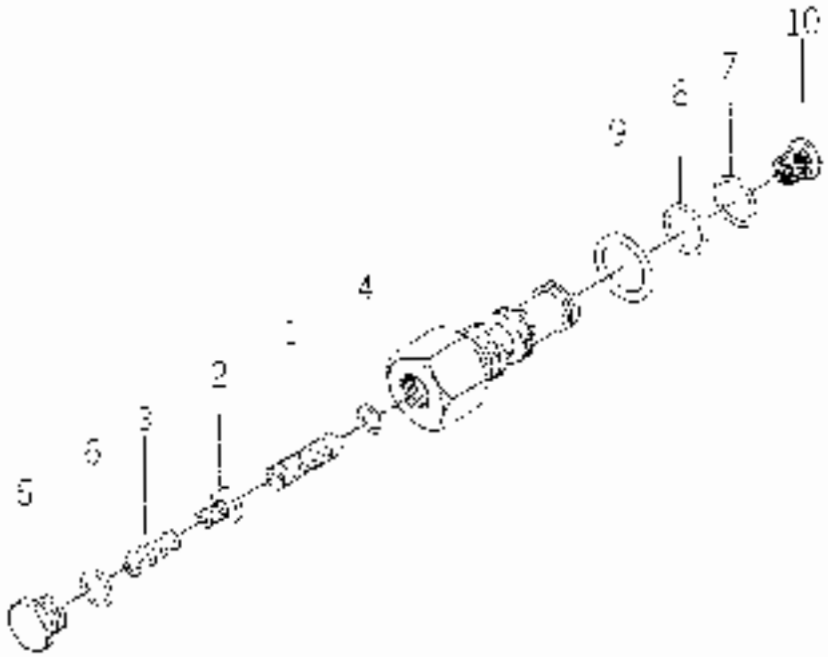

KEY	PART CODE	DESCRIPTION	QTY	TYPE OF WORK. TYPE					REMARKS
1	K233 – 006 – 001 – 00	SHAFT/HOOK/22	1						
2	K233 – 002 – 000 – 00	SPRING/GUIDE	1						
3	K233 – 002 – 004 – 00	SPRING/HOOK							
4	K233 – 003 – 000 – 00	BOOK/STOPPER							
5	K211 – 006 – 011 – 00	PLUG							
6	V720 – 112 – 401 – 00	O-RING/P14							
7	V720 – 112 – 401 – 00	O-RING/P18	1						
8	V720 – 112 – 402 – 00	O-RING/P30	1						
9	V720 – 110 – 500 – 00	RING C	1						
10	16F0 – 508 – 002 – 00	[illegible] 12X18X16							

FIG. 80 COMPONENT PARTS FOR 1688 – 211 – 500 – 00 ON Fig.20

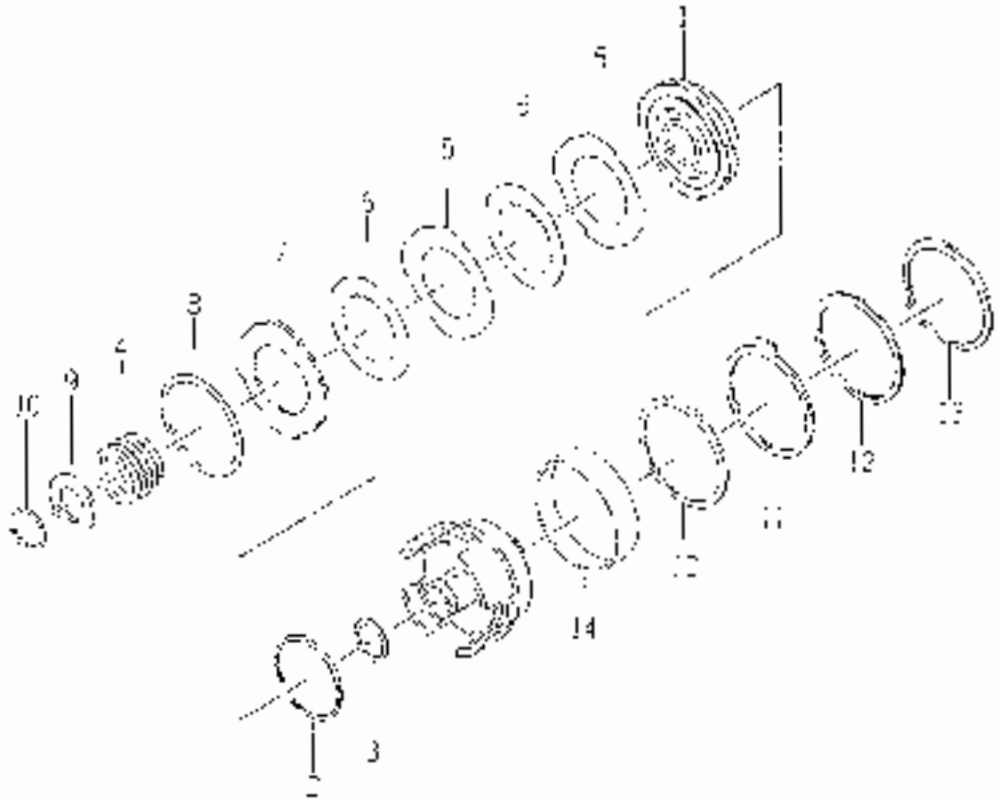

KEY	PART CODE	DESCRIPTION	QTY	TYPE OF MODEL				REMARKS
				TNR*				
1	1688 – 211 – 502 – 00	PIVOT	1					
2	1688 – 211 – 503 – 00	SEALRING/22	1					
3	1688 – 211 – 504 – 00	BEARING/32	1					
4	1688 – 211 – 506 – 00	SPRING	1					
5	1575 – 281 – 317 – 00	SEPARATORPLATE	2					
6	1575 – 281 – 315 – 00	DISKPLATE	2					
7	1575 – 281 – 325 – 00	BACKPLATE						
8	1688 – 211 – 505 – 00	SNAPRING						
9	1688 – 211 – 507 – 00	WASHER	1					
10	1688 – 211 – 508 – 00	SNAPRING/38	1					
11	1688 – 211 – 509 – 00	DISC/BRAKE	1					
12	1688 – 211 – 521 – 00	PRESSURE SPACER	2					
13	1688 – 211 – 522 – 00	SNAPRING 95	1					
14	1688 – 211 – 523 – 00	CONEBOTPRING						

WIRING DIAGRAM (E4) (1)

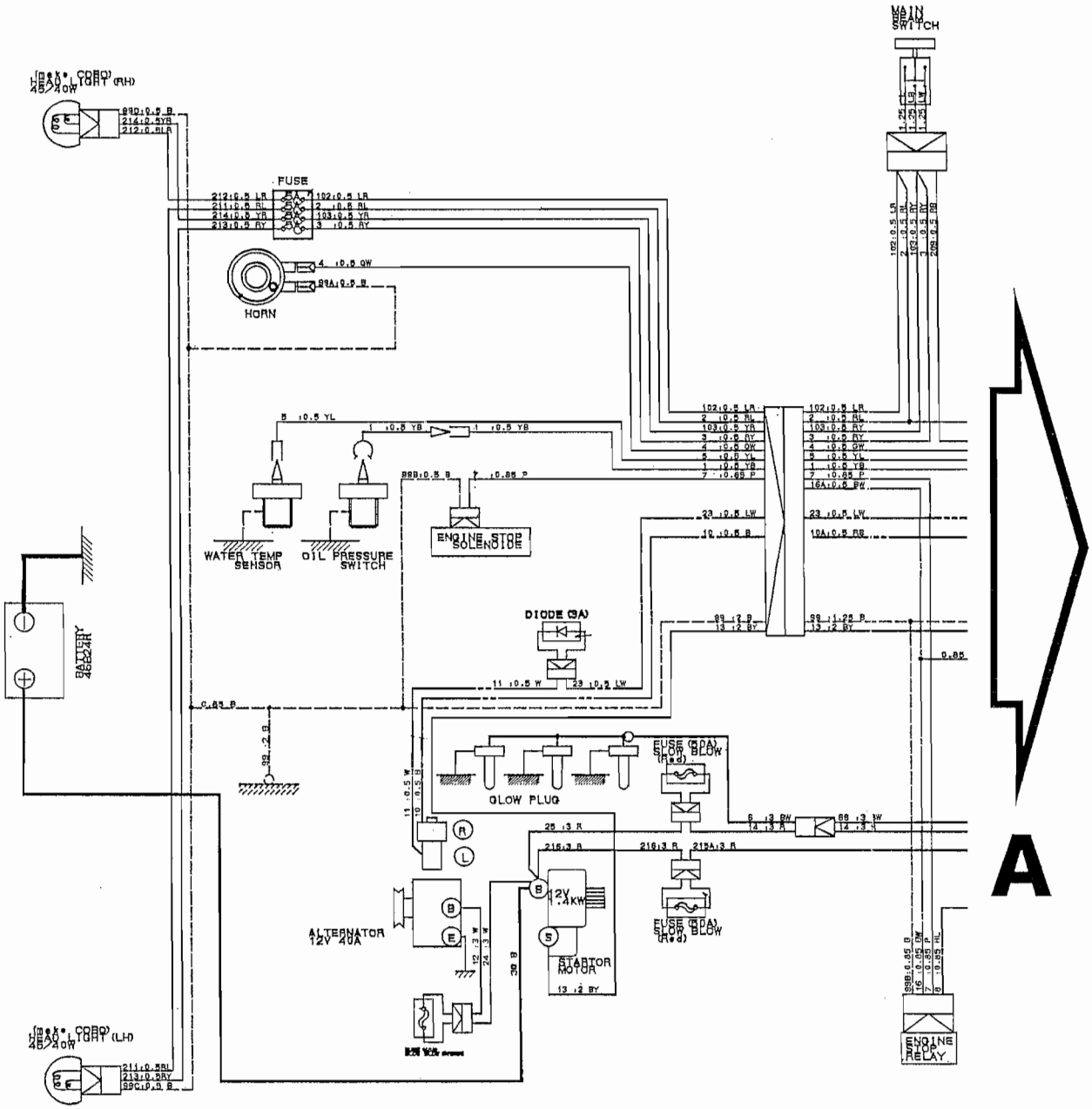

WIRING DIAGRAM (E4) (2)

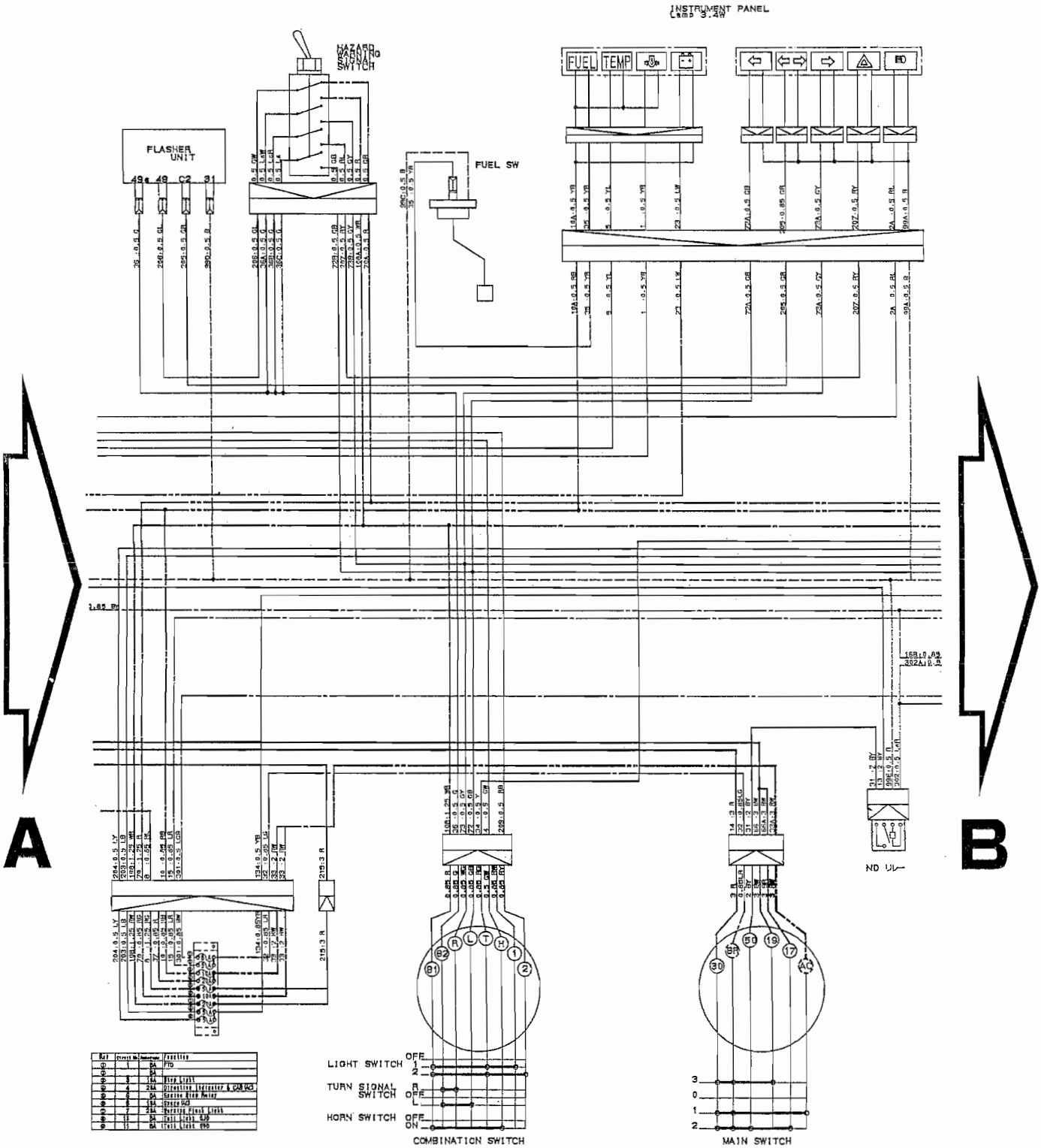

WIRING DIAGRAM (E4) (3)

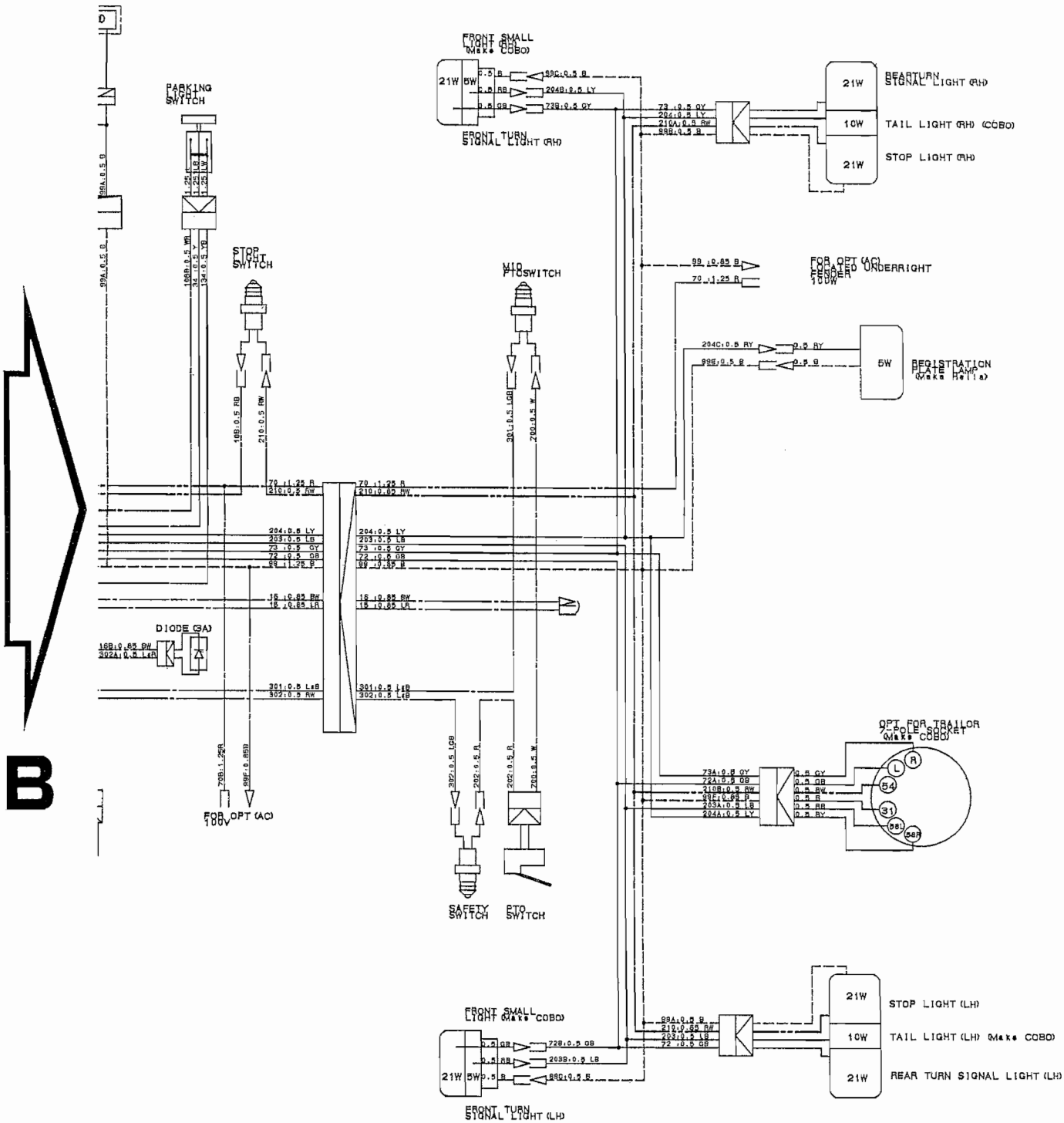

WIRING DIAGRAM (E4/G/SV) (1)

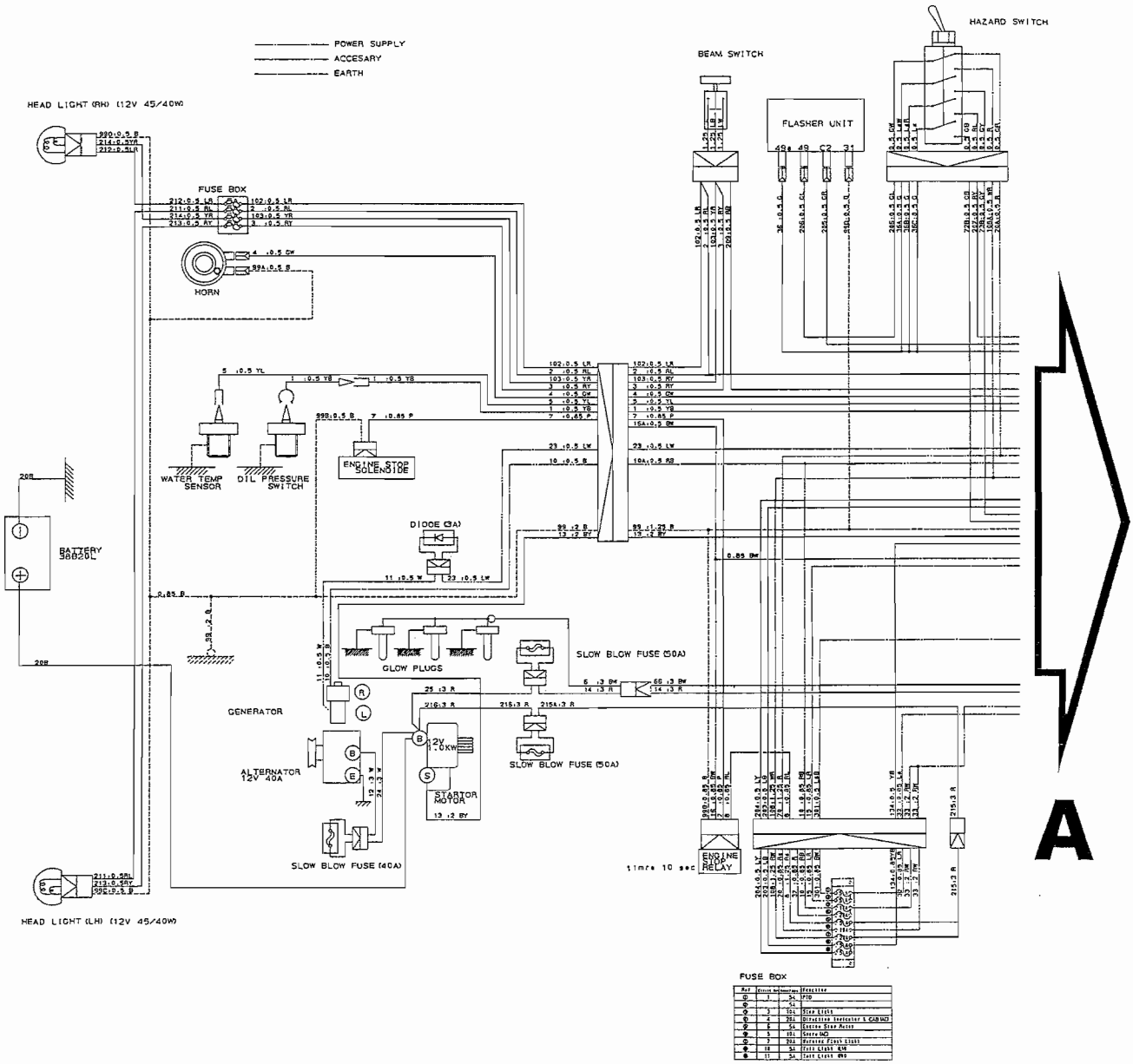

WIRING DIAGRAM (E4/G/SV) (2)

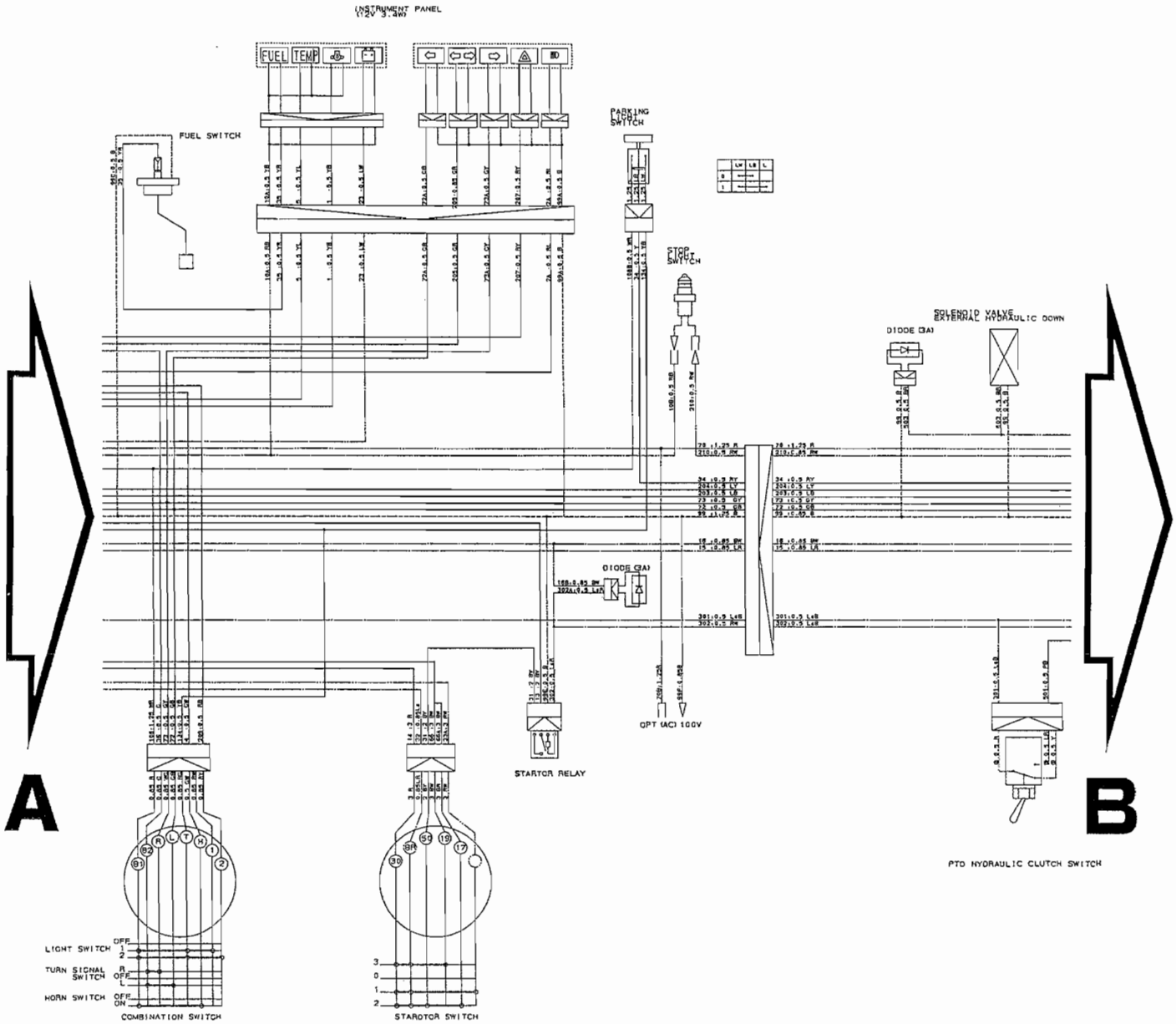

WIRING DIAGRAM (E4/G/SV) (3)

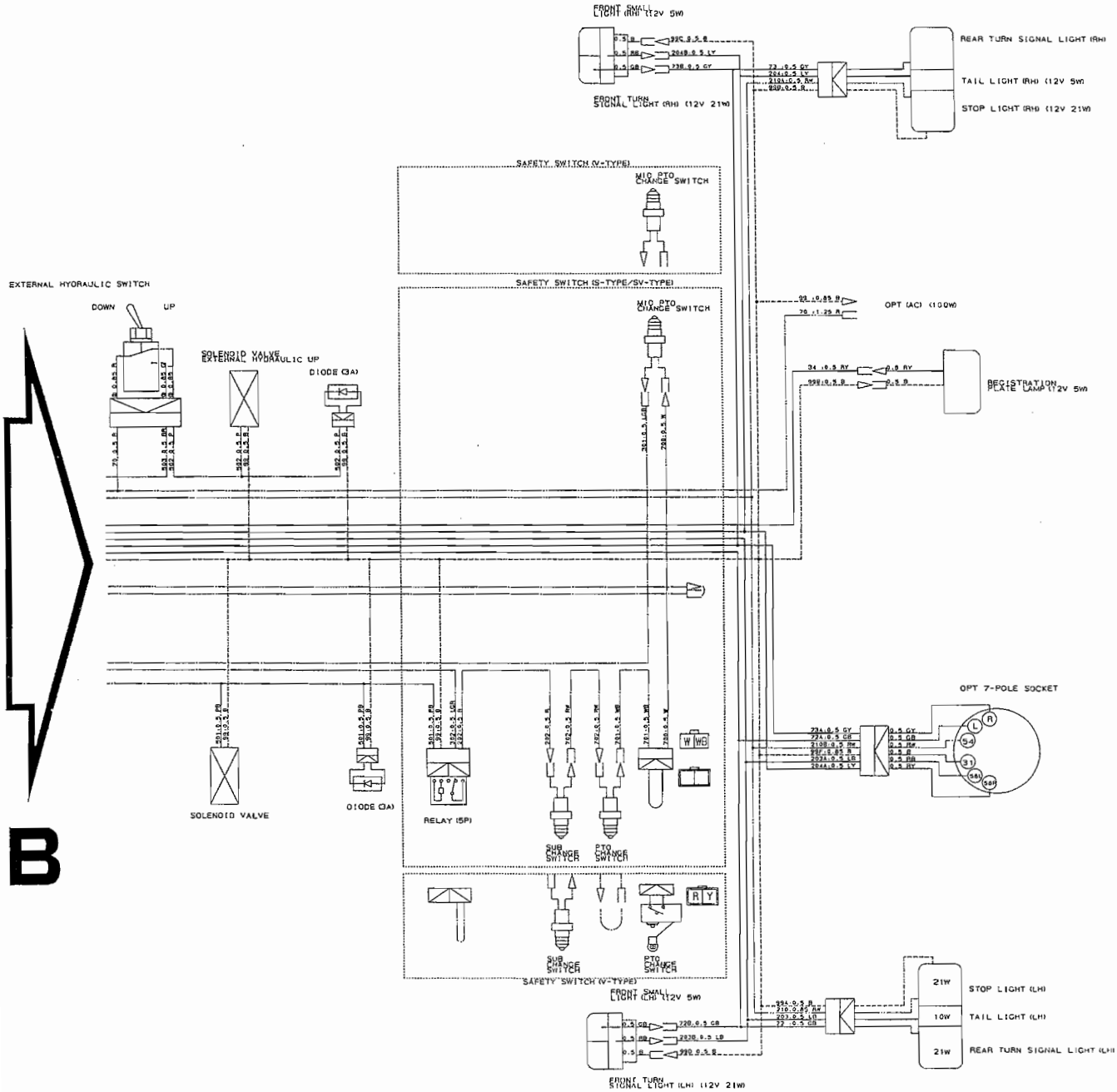

NUMERICAL INDEX

6003-097-180-00

PART CODE	FIG.	KEY	PART CODE	FIG.	KEY	PART CODE	FIG.	KEY
J061-210-015-00	17	23	6209-050-001-00	9	35	6211-361-010-10	7	1
P117-303-003-00	9	25	6209-050-002-00	9	36	6211-510-001-00	5	10
V203-361-004-50	22	8	6209-056-001-00	20	7	6211-511-003-00	5	11
V211-560-802-00	3	3	6209-300-002-00	17	18	6211-511-004-00	5	12
	9	14	6209-300-004-00	8	5	6211-540-001-00	6	1
	17	19	6209-300-013-00	5	29	6211-560-001-00	6	3
	17	27	6209-360-028-10	2	6	6211-599-001-10	5	13
	22	3	6209-409-001-00	9	21		6	2
V211-560-802-50	4	3	6209-409-003-00	11	18		6	4
V341-120-008-00	9	22	6209-440-003-00	13	7	6211-715-002-00	1	5
V411-260-006-00	20	39	6209-490-002-00	2	4	6211-721-001-00	1	6
V523-100-802-40	5	17	6209-500-003-00	9	19	6211-721-002-00	1	7
V523-101-001-80	15	2		9	28	6211-751-001-10	2	2
V600-110-600-40	20	12	6209-500-005-00	11	22	6211-760-012-20	5	28
V600-110-600-50	9	52	6209-580-002-10	20	36	6211-777-007-20	10	1
V600-110-620-30	20	11	6209-587-001-00	13	4	6212-111-015-10	13	1
V600-150-600-20	15	8	6209-605-004-00	1	4	6212-114-015-10	14	1
V682-200-000-60	1	9	6209-605-005-10	5	30	6212-116-015-10	14	3
V704-140-016-00	11	16	6209-610-001-00	5	3	6212-121-008-00	13	2
V705-140-012-00	9	34	6209-610-002-10	9	4	6212-124-008-00	14	2
V710-140-004-00	20	21	6209-625-001-00	5	14	6212-126-008-00	14	4
	20	32	6209-625-002-00	9	9	6212-211-001-10	13	3
V720-101-900-80	20	35	6209-630-002-10	23	6	6212-230-003-00	13	5
V720-102-401-50	16	9	6209-740-001-00	9	29	6212-235-001-00	13	6
V720-102-401-80	7	3	6209-749-001-10	5	15	6212-261-006-00	13	8
V723-102-002-40	9	39		9	49	6212-264-006-00	6	5
V723-102-003-60	9	43	6209-940-004-00	11	15	6212-266-006-00	6	6
V723-102-005-00	9	48	6211-110-020-20	1	1	6212-310-008-10	15	1
V723-102-005-50	17	31	6211-141-008-20	1	10	6212-330-017-20	15	5
1373-121-001-00	22	4	6211-150-008-00	1	2	6212-333-003-00	15	6
1425-621-004-00	9	17	6211-170-004-10	2	1	6212-370-011-00	15	10
3625-301-002-00	7	2	6211-173-003-00	2	3	6212-371-009-00	15	11
3625-540-004-00	9	41	6211-210-050-10	5	1	6212-372-002-10	15	12
6209-000-002-00	11	19	6211-258-001-00	5	8	6212-379-001-00	15	15
6209-000-003-00	1	11	6211-258-002-00	5	9	6212-511-002-00	12	1
6209-000-004-10	5	2	6211-291-016-00	5	24	6212-521-002-00	15	3
6209-000-013-00	15	9	6211-292-001-20	5	25	6212-522-003-00	12	2
6209-009-001-00	16	6	6211-310-021-00	9	1	6212-523-003-00	12	6
6209-030-005-00	9	10	6211-311-011-00	9	44	6212-524-002-00	20	9
6209-030-006-00	9	16	6211-312-002-20	9	45	6212-530-005-10	9	51
	17	28	6211-312-003-10	9	30	6212-531-005-10	5	6
6209-030-043-00	20	16	6211-319-003-00	9	47	6212-535-001-00	12	4
6209-030-044-00	18	4	6211-322-002-00	9	56	6212-535-002-00	20	13
6209-031-083-00	22	5	6211-341-032-00	8	1	6212-551-001-00	11	1
6209-046-001-00	9	18	6211-342-002-10	8	2	6212-552-001-00	11	2

PART CODE	FIG.	KEY	PART CODE	FIG.	KEY	PART CODE	FIG.	KEY
6212-561-001-00	11	3	6213-674-006-10	22	2	6215-543-001-10	20	19
6212-563-001-00	11	4	6213-711-003-20	17	30	6215-546-003-00	9	20
6212-565-001-00	11	5	6213-716-001-40	17	24	6215-549-001-10	5	27
6212-569-002-00	1	8	6213-721-003-00	17	25	6215-549-003-00	20	22
6212-571-001-10	11	6	6213-721-007-00	5	23	6215-549-005-10	20	26
6212-575-001-00	11	7	6213-729-013-10	17	22	6215-549-006-00	20	27
6212-600-002-00	11	8	6213-743-002-10	17	26	6215-549-007-10	20	37
6212-611-004-10	11	9	6214-111-011-20	3	1	6215-549-008-00	20	41
6212-616-002-00	11	17	6214-115-001-20	3	2	6215-549-009-00	20	28
6212-620-001-10	11	10	6214-141-010-10	4	1	6215-549-010-00	20	29
6212-621-002-10	11	11	6214-145-001-30	4	2	6215-549-023-00	20	30
6212-626-002-10	11	12	6215-300-030-00	19	1	6215-549-024-00	20	31
6212-628-004-00	11	13	6215-311-005-00	24	18	6215-549-027-10	20	25
6212-628-005-00	11	14	6215-315-002-00	19	2	6215-549-028-00	20	24
6213-100-003-20	16	1	6215-330-021-00	24	1	6215-600-109-10	20	1
6213-111-001-20	16	2	6215-332-002-00	24	15	6215-611-002-00	25	1
6213-120-003-00	16	3	6215-339-002-00	24	14	6215-612-002-00	25	49
6213-125-001-00	16	4	6215-342-002-00	24	2	6215-619-012-00	25	50
6213-140-008-00	16	8	6215-343-002-00	24	3	6215-619-014-00	25	53
6213-149-002-00	16	10	6215-345-044-00	24	4		25	57
6213-160-002-00	9	31	6215-345-045-00	24	5	6215-619-015-00	25	54
6213-161-001-00	9	32	6215-345-046-00	24	6	6215-619-016-00	25	55
6213-164-001-00	9	33	6215-345-047-00	24	7	6215-619-026-00	25	56
6213-211-001-10	9	42	6215-345-048-00	24	8	6215-619-030-00	25	52
6213-240-002-00	16	15	6215-345-049-00	24	9	6215-621-001-30	20	8
6213-311-003-10	16	12	6215-345-050-00	24	10	6215-622-002-00	25	12
6213-319-004-00	9	2	6215-345-051-00	24	11	6215-629-017-00	25	13
6213-610-005-40	17	1	6215-345-052-00	24	12	6215-629-018-00	25	14
6213-611-003-20	17	2	6215-345-053-00	24	13	6215-629-020-00	25	18
6213-612-004-00	17	9	6215-359-003-00	24	16	6215-629-021-00	25	19
6213-613-002-10	17	8	6215-359-004-00	24	17	6215-629-022-00	25	20
6213-614-003-10	17	12	6215-411-074-10	21	2	6215-629-023-00	25	21
6213-614-006-10	17	17	6215-411-075-00	19	3	6215-629-024-00	25	22
6213-619-002-00	17	11	6215-411-076-00	19	4	6215-629-025-00	25	23
6213-619-003-00	17	10	6215-411-077-00	19	5	6215-629-026-00	25	24
6213-619-005-00	17	16	6215-412-006-00	21	1	6215-629-027-00	25	25
6213-621-003-00	17	6	6215-520-001-00	20	15	6215-629-028-00	25	26
6213-622-002-10	17	5	6215-526-001-10	20	17	6215-629-029-00	25	27
6213-631-002-00	17	3	6215-531-021-00	20	33	6215-629-030-00	25	28
6213-631-005-00	17	4	6215-541-001-00	20	18	6215-629-031-00	25	29
6213-641-004-00	18	2	6215-541-016-30	20	23	6215-629-032-00	25	30
6213-642-002-00	17	7	6215-541-024-10	20	34	6215-629-033-00	25	31
6213-660-007-00	18	1	6215-542-004-20	9	24	6215-629-034-00	25	32
6213-669-008-00	18	3	6215-542-005-00	9	26	6215-629-068-00	25	33
6213-671-012-00	18	5	6215-542-006-00	20	20	6215-629-069-00	25	34

6003-097-180-00

PART CODE	FIG.	KEY	PART CODE	FIG.	KEY	PART CODE	FIG.	KEY
6215-629-070-00	25	35	6281-129-010-00	26	4	6581-129-096-00	26	16
6215-629-071-00	25	36	6281-129-011-00	26	5	6581-129-099-00	26	13
6215-629-072-00	25	37	6281-129-020-00	26	7	6581-129-100-00	26	14
6215-629-073-00	25	38	6281-151-005-00	26	8	6901-050-850-00	11	20
6215-629-074-00	25	39	6281-200-005-00	22	1	6901-066-645-00	15	16
6215-629-075-00	25	40	6281-213-006-00	27	7	6901-910-612-00	7	4
6215-629-076-00	25	41	6281-214-003-00	27	12		12	5
6215-629-077-00	25	42	6281-214-004-00	27	13		20	14
6215-629-078-00	25	43	6281-215-001-00	27	17		23	7
6215-629-079-00	25	44	6281-216-001-00	27	18	6901-910-614-00	5	26
6215-629-080-00	25	45	6281-217-001-00	27	16	6901-910-616-00	9	40
6215-629-081-00	25	46	6281-221-001-00	27	4	6901-910-625-00	16	7
6215-629-082-00	25	47	6281-222-004-00	27	1	6901-910-816-00	16	11
6215-631-017-00	25	2	6281-229-002-00	27	2	6901-910-830-00	17	32
6215-634-002-00	25	15	6281-229-003-00	27	3	6901-910-840-00	3	4
6215-635-002-00	25	8	6281-229-004-00	27	6	6901-910-845-00	9	15
6215-635-008-00	25	51	6281-229-005-00	27	5		17	13
6215-637-002-00	25	48	6281-229-006-00	27	8	6901-911-020-00	8	3
6215-639-006-00	25	16	6281-229-007-00	27	9		10	2
6215-639-007-00	25	17	6281-229-008-00	27	11	6902-050-610-00	15	13
6215-641-007-00	25	3	6281-229-009-00	27	10	6902-050-816-00	9	46
6215-643-002-00	25	4	6281-229-011-00	27	15	6904-110-818-00	5	19
6215-644-002-00	25	6	6281-229-012-00	27	19	6904-110-822-00	9	5
6215-649-003-00	25	5	6281-229-013-00	27	20		9	50
6215-649-004-00	25	7	6281-229-014-00	27	21	6904-110-840-00	5	20
6215-649-005-00	25	9	6281-229-015-00	27	22	6904-110-850-00	9	7
6215-649-006-00	25	10	6281-229-016-00	27	23	6904-110-855-00	9	6
6215-649-007-00	25	11	6281-229-017-00	27	24	6908-000-716-00	12	3
6219-310-003-10	9	38	6281-229-018-00	27	25		20	10
6219-732-002-00	23	4	6281-229-029-00	27	14	6908-000-750-00	15	4
6219-752-001-00	20	2	6281-271-002-00	27	26	6908-160-408-00	16	5
6219-752-002-00	20	3	6281-410-014-00	23	3	6908-160-510-00	5	18
6219-752-003-00	20	4	6281-910-001-00	23	5		9	8
6219-752-004-00	20	5	6281-920-001-00	23	8	6908-160-816-00	5	16
6219-752-005-00	20	6	6281-971-003-00	23	1		8	4
6281-100-005-00	22	7	6282-450-002-00	23	2		15	7
6281-111-002-00	26	1	6294-453-002-00	5	21	6909-110-406-00	9	37
6281-115-005-00	26	11	6509-000-084-00	9	11		20	38
6281-116-002-00	26	2	6509-605-019-10	5	5	6909-110-408-00	9	53
6281-118-002-00	26	9		9	3		9	57
6281-121-003-00	26	3	6511-321-083-00	9	55		26	22
6281-124-001-00	26	6	6513-770-022-10	17	29	6909-110-410-00	22	6
6281-129-006-00	26	17	6581-117-007-00	26	10		22	9
6281-129-008-00	26	18	6581-123-011-00	26	12	6909-110-508-00	9	12
6281-129-009-00	26	19	6581-129-092-00	26	15		11	21

6003-097-180-00

PART CODE	FIG.	KEY	PART CODE	FIG.	KEY	PART CODE	FIG.	KEY
6909-110-508-00	17	14						
	17	20						
6909-111-508-00	26	20						
6909-150-506-00	15	14						
	20	40						
6909-150-508-00	9	13						
	9	54						
	9	58						
	17	15						
	17	21						
	26	21						
6909-150-510-00	22	10						
6909-202-308-00	9	27						
6909-572-008-00	2	5						
6909-830-212-00	1	12						
6909-902-299-00	5	22						
6909-906-105-10	16	13						
6909-920-843-00	9	23						
	16	14						
6911-129-006-00	1	3						
6911-129-083-00	5	7						
6911-219-195-00	5	4						

NUMERICAL INDEX

6003-097-190-00

PART CODE	FIG.	KEY	PART CODE	FIG.	KEY	PART CODE	FIG.	KEY
J061-210-015-00	17	23	6209-056-001-00	20	7	6211-361-010-10	7	1
P117-303-003-00	9	25	6209-300-002-00	17	18	6211-510-001-00	5	10
V203-361-004-50	22	8	6209-300-004-00	8	5	6211-511-003-00	5	11
V211-560-802-00	3	3	6209-300-013-00	5	29	6211-511-004-00	5	12
	9	14	6209-360-028-10	2	6	6211-540-001-00	6	1
	17	19	6209-409-001-00	9	21	6211-560-001-00	6	3
	17	27	6209-409-003-00	11	18	6211-599-001-10	5	13
	22	3	6209-440-003-00	13	7		6	2
V211-560-802-50	4	3	6209-490-002-00	2	4		6	4
V341-120-008-00	9	22	6209-500-003-00	9	19	6211-715-002-00	1	5
V411-260-006-00	20	39		9	28	6211-721-001-00	1	6
V523-100-802-40	5	17	6209-500-005-00	11	22	6211-721-002-00	1	7
V523-101-001-80	15	2	6209-580-002-10	20	36	6211-751-001-10	2	2
V600-110-600-40	20	12	6209-587-001-00	13	4	6211-760-012-20	5	28
V600-110-600-50	9	52	6209-605-004-10	1	4	6211-777-007-20	10	1
V600-110-620-30	20	11	6209-605-005-10	5	30	6212-111-015-10	13	1
V682-200-000-60	1	9	6209-610-001-00	5	3	6212-114-015-10	14	1
V704-140-016-00	11	16	6209-610-002-10	9	4	6212-116-015-10	14	3
V705-140-012-00	9	34	6209-625-001-00	5	14	6212-121-008-00	13	2
V710-140-004-00	20	21	6209-625-002-00	9	9	6212-124-008-00	14	2
	20	32	6209-630-002-10	23	6	6212-126-008-00	14	4
V720-101-900-80	20	35	6209-740-001-00	9	29	6212-211-001-10	13	3
V720-102-401-50	16	9	6209-749-001-20	5	15	6212-230-003-00	13	5
V720-102-401-80	7	3		9	49	6212-235-001-00	13	6
V723-102-002-40	9	39	6209-920-002-00	9	23	6212-261-006-00	13	8
V723-102-003-60	9	43		16	14	6212-264-006-00	6	5
V723-102-005-00	9	48	6209-940-004-00	11	15	6212-266-006-00	6	6
V723-102-005-50	17	31	6211-110-020-20	1	1	6212-310-008-10	15	1
1373-121-001-00	22	4	6211-141-008-20	1	10	6212-330-046-00	15	5
1425-621-004-00	9	17	6211-150-008-00	1	2	6212-333-003-00	15	6
3625-301-002-00	7	2	6211-170-004-10	2	1	6212-339-004-10	15	8
3625-540-004-00	9	41	6211-173-003-00	2	3	6212-370-011-00	15	9
6209-000-002-00	11	19	6211-210-050-10	5	1	6212-371-009-00	15	10
6209-000-003-00	1	11	6211-258-001-00	5	8	6212-372-002-10	15	11
6209-000-004-10	5	2	6211-258-002-00	5	9	6212-379-001-00	15	14
6209-000-025-00	15	7	6211-291-016-00	5	24	6212-511-002-00	12	1
6209-030-005-00	9	10	6211-292-001-20	5	25	6212-521-002-00	15	3
6209-030-006-00	9	16	6211-310-021-00	9	1	6212-522-003-00	12	2
	17	28	6211-311-011-00	9	44	6212-523-003-00	12	6
6209-030-043-00	20	16	6211-312-002-20	9	45	6212-524-002-00	20	9
6209-030-044-00	18	4	6211-312-003-10	9	30	6212-530-005-10	9	51
6209-031-083-00	22	5	6211-319-003-00	9	47	6212-531-C05-10	5	6
6209-046-001-00	9	18	6211-322-002-00	9	56	6212-535-C01-00	12	4
6209-050-001-00	9	35	6211-341-032-00	8	1	6212-535-C02-00	20	13
6209-050-002-00	9	36	6211-342-002-10	8	2	6212-551-C01-00	11	1

6003-097-190-00

PART CODE	FIG.	KEY	PART CODE	FIG.	KEY	PART CODE	FIG.	KEY
6212-552-001-00	11	2	6213-660-007-00	18	1	6215-542-006-00	20	20
6212-561-001-00	11	3	6213-669-008-00	18	3	6215-543-001-10	20	19
6212-563-001-00	11	4	6213-671-012-00	18	5	6215-546-003-00	9	20
6212-565-001-00	11	5	6213-674-006-10	22	2	6215-549-001-10	5	27
6212-569-002-00	1	8	6213-711-003-20	17	30	6215-549-003-00	20	22
6212-571-003-00	11	6	6213-716-001-40	17	24	6215-549-005-10	20	26
6212-575-001-00	11	7	6213-721-003-00	17	25	6215-549-006-00	20	27
6212-600-002-00	11	8	6213-721-007-00	5	23	6215-549-007-10	20	37
6212-611-004-10	11	9	6213-729-013-10	17	22	6215-549-008-00	20	41
6212-616-002-00	11	17	6213-743-002-10	17	26	6215-549-009-00	20	28
6212-620-001-10	11	10	6214-111-011-20	3	1	6215-549-010-00	20	29
6212-621-002-10	11	11	6214-115-001-20	3	2	6215-549-023-00	20	30
6212-626-002-10	11	12	6214-141-010-10	4	1	6215-549-024-00	20	31
6212-628-004-00	11	13	6214-145-001-30	4	2	6215-549-027-10	20	25
6212-628-005-00	11	14	6215-300-037-00	19	1	6215-549-028-10	20	24
6213-100-003-20	16	1	6215-311-005-00	24	16	6215-600-109-10	20	1
6213-111-001-30	16	2	6215-315-002-00	19	2	6215-611-002-00	25	1
6213-119-001-00	16	6	6215-330-022-00	24	1	6215-612-002-00	25	49
6213-120-003-10	16	3	6215-332-006-00	24	15	6215-619-012-00	25	50
6213-125-001-00	16	4	6215-339-004-00	24	14	6215-619-014-00	25	53
6213-129-003-00	16	5	6215-342-002-00	24	13		25	57
6213-140-008-00	16	8	6215-343-002-00	24	12	6215-619-015-00	25	54
6213-149-002-00	16	10	6215-345-044-00	24	2	6215-619-016-00	25	55
6213-160-002-00	9	31	6215-345-045-00	24	3	6215-619-026-00	25	56
6213-161-001-00	9	32	6215-345-046-00	24	4	6215-619-030-00	25	52
6213-164-001-00	9	33	6215-345-047-00	24	5	6215-621-001-30	20	8
6213-211-001-10	9	42	6215-345-048-00	24	6	6215-622-002-00	25	12
6213-240-002-00	16	15	6215-345-049-00	24	7	6215-629-017-00	25	13
6213-311-003-10	16	12	6215-345-050-00	24	8	6215-629-018-00	25	14
6213-319-004-00	9	2	6215-345-051-00	24	9	6215-629-020-00	25	18
6213-610-005-40	17	1	6215-345-052-00	24	10	6215-629-021-00	25	19
6213-611-003-20	17	2	6215-345-053-00	24	11	6215-629-022-00	25	20
6213-612-004-00	17	9	6215-411-074-10	21	2	6215-629-023-00	25	21
6213-613-002-10	17	8	6215-411-075-00	19	3	6215-629-024-00	25	22
6213-614-003-10	17	12	6215-411-076-00	19	4	6215-629-025-00	25	23
6213-614-006-10	17	17	6215-411-077-00	19	5	6215-629-026-00	25	24
6213-619-002-00	17	11	6215-412-006-00	21	1	6215-629-027-00	25	25
6213-619-003-00	17	10	6215-520-001-00	20	15	6215-629-028-00	25	26
6213-619-005-00	17	16	6215-526-001-10	20	17	6215-629-029-00	25	27
6213-621-003-00	17	6	6215-531-021-00	20	33	6215-629-030-00	25	28
6213-622-002-10	17	5	6215-541-001-00	20	18	6215-629-031-00	25	29
6213-631-002-00	17	3	6215-541-016-30	20	23	6215-629-032-00	25	30
6213-631-005-00	17	4	6215-541-024-10	20	34	6215-629-033-00	25	31
6213-641-004-00	18	2	6215-542-004-20	9	24	6215-629-034-00	25	32
6213-642-002-00	17	7	6215-542-005-00	9	26	6215-629-068-00	25	33

6003-097-190-00

PART CODE	FIG.	KEY	PART CODE	FIG.	KEY	PART CODE	FIG.	KEY
6215-629-069-00	25	34	6281-129-009-00	26	19	6581-129-092-00	26	15
6215-629-070-00	25	35	6281-129-010-00	26	4	6581-129-096-00	26	16
6215-629-071-00	25	36	6281-129-011-00	26	5	6581-129-099-00	26	13
6215-629-072-00	25	37	6281-129-020-00	26	7	6581-129-100-00	26	14
6215-629-073-00	25	38	6281-151-005-00	26	8	6901-050-850-00	11	20
6215-629-074-00	25	39	6281-200-005-00	22	1	6901-066-645-00	15	15
6215-629-075-00	25	40	6281-213-006-00	27	7	6901-910-612-00	7	4
6215-629-076-00	25	41	6281-214-003-00	27	12		12	5
6215-629-077-00	25	42	6281-214-004-00	27	13		20	14
6215-629-078-00	25	43	6281-215-001-00	27	17		23	7
6215-629-079-00	25	44	6281-216-001-00	27	18	6901-910-614-00	5	26
6215-629-080-00	25	45	6281-217-001-00	27	16	6901-910-616-00	9	40
6215-629-081-00	25	46	6281-221-001-00	27	4	6901-910-625-00	16	7
6215-629-082-00	25	47	6281-222-004-00	27	1	6901-910-816-00	16	11
6215-631-017-00	25	2	6281-229-002-00	27	2	6901-910-830-00	17	32
6215-634-002-00	25	15	6281-229-003-00	27	3	6901-910-840-00	3	4
6215-635-002-00	25	8	6281-229-004-00	27	6	6901-910-845-00	9	15
6215-635-008-00	25	51	6281-229-005-00	27	5		17	13
6215-637-002-00	25	48	6281-229-006-00	27	8	6901-911-020-00	8	3
6215-639-006-00	25	16	6281-229-007-00	27	9		10	2
6215-639-007-00	25	17	6281-229-008-00	27	11	6902-050-610-00	15	12
6215-641-007-00	25	3	6281-229-009-00	27	10	6902-050-816-00	9	46
6215-643-002-00	25	4	6281-229-011-00	27	15	6904-110-818-00	5	19
6215-644-002-00	25	6	6281-229-012-00	27	19	6904-110-822-00	9	5
6215-649-003-00	25	5	6281-229-013-00	27	20		9	50
6215-649-004-00	25	7	6281-229-014-00	27	21	6904-110-840-00	5	20
6215-649-005-00	25	9	6281-229-015-00	27	22	6904-110-850-00	9	7
6215-649-006-00	25	10	6281-229-016-00	27	23	6904-110-855-00	9	6
6215-649-007-00	25	11	6281-229-017-00	27	24	6908-000-716-00	12	3
6219-310-003-10	9	38	6281-229-018-00	27	25		20	10
6219-732-002-00	23	4	6281-229-029-00	27	14	6908-000-750-00	15	4
6219-752-001-00	20	2	6281-271-002-00	27	26	6908-160-510-00	5	18
6219-752-002-00	20	3	6281-410-010-00	23	3		9	8
6219-752-003-00	20	4	6281-910-001-00	23	5	6908-160-816-00	5	16
6219-752-004-00	20	5	6281-920-001-00	23	8		8	4
6219-752-005-00	20	6	6281-971-003-00	23	1	6909-110-406-00	9	37
6281-100-005-00	22	7	6282-450-002-00	23	2		20	38
6281-111-002-00	26	1	6294-453-002-00	5	21	6909-110-408-00	9	53
6281-115-005-00	26	11	6509-000-084-00	9	11		9	57
6281-116-002-00	26	2	6509-605-019-10	5	5		26	22
6281-118-002-00	26	9		9	3	6909-110-410-00	22	6
6281-121-003-00	26	3	6511-321-083-00	9	55		22	9
6281-124-001-00	26	6	6513-770-022-10	17	29	6909-110-508-00	9	12
6281-129-006-00	26	17	6581-117-007-00	26	10		11	21
6281-129-008-00	26	18	6581-123-011-00	26	12		17	14

6003-097-190-00

PART CODE	FIG.	KEY	PART CODE	FIG.	KEY	PART CODE	FIG.	KEY
6909-110-508-00	17	20						
6909-111-508-00	26	20						
6909-150-506-00	15	13						
	20	40						
6909-150-508-00	9	13						
	9	54						
	9	58						
	17	15						
	17	21						
	26	21						
6909-150-510-00	22	10						
6909-202-308-00	9	27						
6909-572-008-00	2	5						
6909-830-212-00	1	12						
6909-902-299-00	5	22						
6909-906-105-10	16	13						
6911-129-006-00	1	3						
6911-129-083-00	5	7						
6911-219-195-00	5	4						

NUMERICAL INDEX

PART CODE	FIG.	KEY	PART CODE	FIG.	KEY	PART CODE	FIG.	KEY
J061-210-012-00	4	15	K270-001-200-00	46	10	V201-361-007-50	13	48
J061-210-015-00	1	25	K270-001-201-00	46	11	V201-361-008-50	37	20
J061-224-032-00	1	21	K273-002-003-00	46	7	V201-361-009-00	25	3
J061-230-038-00	1	19	K273-005-000-00	46	4	V201-361-014-00	13	49
J061-236-044-00	1	18	K273-005-002-00	46	13	V201-361-202-50	8	4
	1	22	K273-005-100-00	46	5		9	2
J061-242-050-00	3	8	P113-211-300-00	45	7		33	9
J061-247-055-00	3	10	P113-211-330-00	38	17	V201-361-204-00	8	5
J062-081-087-00	4	18		39	17		9	3
J062-111-120-00	4	16	P117-202-015-00	45	6	V203-261-002-00	36	11
K185-031-302-00	37	6	P117-501-230-00	47	30	V203-261-202-00	23	5
	37	13	P117-501-250-00	38	14		25	26
K185-031-303-00	37	7		43	6		60	3
	37	14		47	28		61	3
K190-001-202-10	77	20	V111-166-001-20	50	24	V203-361-002-00	5	10
K200-035-006-00	77	19	V120-264-000-80	57	4		36	7
K200-053-000-00	45	1	V120-265-001-00	57	6	V203-361-002-50	40	2
K200-053-001-00	77	1	V120-364-002-50	58	6	V203-361-003-00	2	3
K200-053-002-00	77	18		59	6	V210-260-604-50	47	10
K200-053-100-00	77	2	V120-366-001-60	56	13	V210-360-601-20	1	9
K200-053-102-00	77	3		62	26	V210-360-601-60	27	23
K211-008-011-00	77	9		63	23		28	21
	78	5	V120-376-001-20	50	20		49	12
	79	5	V120-376-001-60	59	14		49	15
K233-002-003-00	77	6		60	6		57	23
	78	2		61	7		57	26
	79	2	V120-376-002-00	50	12		60	17
K233-002-004-00	77	7		52	17		61	18
	78	3	V200-260-501-0B	5	7	V210-360-602-00	11	34
	79	3	V200-260-605-50	38	3		12	37
K233-002-005-00	77	8		39	3		25	29
	78	4	V201-260-802-50	10	3	V210-560-603-00	54	8
	79	4	V201-260-803-00	29	10	V211-260-801-60	8	9
K233-003-000-00	38	9	V201-260-805-50	45	3		8	13
K233-003-001-00	78	1	V201-260-806-00	45	2		9	7
K233-005-000-00	77	4	V201-260-806-50	4	11		55	22
K233-005-001-00	77	5	V201-260-808-00	3	13	V211-260-802-00	5	22
K233-006-000-00	39	11	V201-260-813-00	62	27		8	32
K233-006-001-00	79	1		63	24		31	35
K250-001-007-00	77	17	V201-261-004-50	32	4		34	16
K250-018-000-00	38	12	V201-261-202-50	40	5	V211-260-803-00	12	35
	39	14		52	6	V211-261-002-00	17	14
K250-031-005-00	77	15	V201-261-205-00	32	3		53	9
K270-001-003-10	46	6	V201-360-804-50	27	2		53	14
K270-001-004-00	46	8		28	2	V211-261-003-00	11	32

PART CODE	FIG.	KEY	PART CODE	FIG.	KEY	PART CODE	FIG.	KEY
V211-360-801-60	1	13	V211-561-003-50	8	35	V304-260-008-00	35	4
	1	16		9	17		35	13
	5	2		37	19		35	23
	6	10	V211-660-802-00	11	24		35	35
	6	15		12	27		35	40
	17	4	V211-660-802-50	51	27		46	18
	23	4	V211-661-003-50	11	20		47	23
	24	4		12	23	V304-260-010-00	11	7
	25	25	V211-661-004-00	11	21		12	7
	26	13		12	24		31	26
	27	15	V211-661-005-00	11	15		32	8
	28	15		12	15	V304-260-012-00	32	9
	30	7	V220-540-504-50	46	15		41	21
	30	13	V220-540-802-50	47	15		41	33
	39	10	V220-541-003-50	13	34	V304-460-010-00	8	33
	43	9	V251-261-202-5D	11	8		9	15
	44	8		12	8		43	5
	47	7	V251-261-203-50	31	36		44	6
	47	11	V251-340-802-5D	44	2	V304-460-012-00	8	6
	48	4	V251-341-002-50	11	14		9	4
	50	10		12	14	V305-260-012-00	31	37
	51	15	V251-341-003-5D	11	4	V327-262-110-00	41	40
	52	9		12	4		41	46
	57	28	V252-261-004-00	11	9	V327-262-112-00	41	7
V211-360-802-00	3	12		12	9	V328-262-110-00	7	6
	23	15	V252-261-005-50	11	10		36	3
	24	14		12	10	V328-262-112-00	41	15
	38	21	V252-341-002-00	11	13		41	29
	39	21		12	13	V334-460-010-00	5	11
	52	13	V252-341-003-00	11	12		8	10
	52	15		12	12		9	8
	53	2	V252-341-003-50	11	3	V335-260-012-00	57	21
	53	4		12	3	V350-160-006-00	48	8
	53	11	V252-341-204-50	11	11		49	8
	54	15		12	11		50	6
	58	7	V273-360-601-20	1	5	V360-260-006-00	51	7
	59	7	V290-106-001-20	48	7		54	10
V211-360-802-50	35	15	V301-260-006-00	6	6	V361-260-006-00	52	18
V211-360-804-00	1	29		54	11		55	17
V211-361-002-50	27	21	V304-260-008-00	10	4		59	15
	54	3		10	11		60	7
V211-560-802-50	11	29		27	10		61	8
	12	32		28	10	V362-260-008-00	29	11
V211-561-002-50	43	3		29	7		38	22
	44	4		34	18		39	22

PART CODE	FIG.	KEY
V362-260-008-00	51	16
	52	10
	55	8
	55	23
V363-260-008-00	5	3
	49	13
	51	30
V401-160-006-00	38	4
	39	4
	50	22
V401-160-008-00	3	14
	4	12
	27	3
	27	9
	28	3
	28	9
	31	11
	34	19
	45	4
	46	17
	47	22
	62	28
	63	25
V401-160-010-00	2	4
	5	12
	8	11
	8	34
	9	9
	9	16
	11	6
	12	6
	13	50
	25	4
	31	25
	32	6
	36	8
	36	12
	37	21
	40	3
	41	49
	43	4
	44	5
V401-160-012-00	8	8
	9	6
	32	5

PART CODE	FIG.	KEY
V401-160-012-00	33	10
	40	6
	52	7
V411-260-004-00	57	3
V411-260-005-00	55	6
	57	5
V411-260-006-00	6	5
	7	10
	10	7
	46	9
	50	9
	50	23
V411-260-008-00	1	31
	10	13
	17	9
	23	10
	24	9
	26	5
	31	31
	35	7
	35	19
	35	36
	47	21
	49	20
	51	4
	51	12
	62	29
	63	26
V411-260-010-00	5	13
	7	5
	8	36
	9	18
	11	5
	12	5
	13	51
	36	5
V411-260-012-00	8	7
	9	5
	51	11
	52	8
V500-162-001-50	51	13
V500-162-002-00	10	8
	31	32
	35	8
	35	20

PART CODE	FIG.	KEY
V500-162-002-00	35	37
	36	4
	49	21
V500-162-002-50	37	16
V500-162-501-50	7	11
V500-162-502-00	23	20
	24	19
V500-162-502-50	7	7
	41	41
	41	47
V500-163-001-50	10	14
V500-163-002-00	8	21
	17	10
	23	11
	24	10
	26	6
V500-163-002-50	41	8
	41	16
	41	30
V511-100-805-00	29	2
V522-100-801-60	31	9
V522-100-801-80	32	7
V523-101-002-40	11	19
	12	22
	12	34
	25	2
	37	22
V530-240-502-40	31	22
V580-140-502-80	35	32
V580-140-602-50	17	6
	23	7
	24	6
	26	2
V580-140-603-20	8	26
	9	13
V580-140-604-00	25	9
V580-140-802-80	35	31
V600-110-600-90	31	12
V600-110-601-00	31	13
V600-110-620-40	19	4
	19	18
	20	15
	20	37
V600-110-620-50	19	16
	20	34

PART CODE	FIG.	KEY	PART CODE	FIG.	KEY	PART CODE	FIG.	KEY
V600-110-620-50	25	16	V704-140-020-00	22	7	V720-112-401-10	38	7
V600-110-620-60	20	16	V704-140-022-00	10	2		38	18
	31	17		34	7		39	7
V600-110-620-80	33	6		34	14		39	18
V600-110-630-40	14	8	V704-140-025-00	15	14		45	8
	14	12		16	2		47	31
	15	8		19	19	V720-112-401-40	13	27
	15	12		20	24		13	46
	19	15		20	33		38	11
	20	35		20	38		38	15
	25	15		25	14		39	13
V600-110-630-60	33	5		34	20		43	7
V600-111-600-60	14	3	V704-140-030-00	19	14		47	29
	15	3		20	8		77	10
V600-150-620-50	42	6		20	18		78	6
V600-150-630-40	42	5		20	31		79	6
V607-110-620-40	14	9		33	7	V720-112-401-80	13	43
	15	9	V705-140-028-00	47	18		77	11
V607-110-630-40	21	5	V705-140-030-00	13	25		78	7
	22	5	V705-140-047-00	13	24		79	7
V654-420-262-40	20	11	V705-140-052-00	25	17	V720-112-402-00	38	2
V654-425-322-40	19	6	V706-140-045-00	8	17		38	13
	20	21	V707-140-062-00	20	19		39	2
V654-430-382-40	19	11	V707-140-080-00	33	8		39	15
	20	28	V720-101-900-50	12	21		47	9
V682-200-001-00	18	4		46	16		77	12
	18	7	V720-101-900-70	12	20		78	8
	25	13	V720-102-401-00	4	3		79	8
	47	19		31	24	V720-113-502-50	77	13
	58	2	V720-102-401-20	77	16		78	9
	59	2	V720-102-401-40	13	47		79	9
	60	2		17	2	V720-113-502-90	37	15
	61	2		23	2	V721-103-104-50	8	22
V704-140-015-00	27	16		24	2	V723-112-002-90	46	12
	27	19		25	23	V744-114-280-70	47	17
	28	16	V720-102-401-80	34	5	V744-120-350-70	8	23
	28	19		34	12	V744-130-450-80	31	18
V704-140-017-00	13	40	V720-102-402-00	36	15	V744-135-520-80	25	19
V704-140-018-00	17	17	V720-102-402-10	47	5	V744-135-550-80	21	8
	26	11	V720-103-502-80	47	6		22	8
V704-140-020-00	13	23	V720-103-503-60	36	16	V760-150-000-00	41	4
	14	7	V720-103-504-40	4	7	V761-150-000-00	8	2
	15	7	V720-111-900-70	46	14	V763-150-000-00	29	5
	20	13		77	21		35	2
	21	7	V720-112-401-10	13	28		41	9

1688-097-100-10

PART CODE	FIG.	KEY	PART CODE	FIG.	KEY	PART CODE	FIG.	KEY
V780-140-000-1T	77	23	1404-312-006-00	35	21	1425-621-004-00	63	10
V780-140-000-2T	77	22	1404-402-001-00	37	3	1426-406-203-00	36	14
V781-160-000-6B	25	27		37	9	1427-111-229-00	3	15
V920-550-801-00	76	5	1404-402-002-00	37	4	1427-201-002-50	11	2
V920-551-201-40	76	6		37	10	1427-201-007-00	11	16
V920-551-301-70	76	7	1404-402-005-00	41	38		12	16
V920-551-902-20	76	8		41	44	1427-201-008-00	11	17
V936-150-015-00	76	3	1404-503-006-00	47	20		12	17
V999-200-003-00	33	13	1411-401-001-00	41	2	1427-201-012-00	11	25
	33	16	1414-312-002-00	49	17		12	28
	42	3	1415-102-007-00	4	2	1427-201-013-00	11	26
W296-134-007-00	48	11	1415-102-008-00	4	4		12	29
	51	6	1415-102-009-00	4	5	1427-201-014-00	11	27
1105-106-001-00	10	5	1415-102-011-00	4	8		12	30
1105-410-003-00	27	17	1415-102-013-00	4	10	1427-201-015-00	11	28
	28	17	1415-312-500-00	35	5		12	31
1118-901-006-00	64	4	1416-621-037-00	5	6	1427-201-016-00	32	11
1302-225-003-00	25	12	1419-403-001-00	41	11	1427-203-002-00	14	15
1326-706-002-10	8	3		41	25		15	17
	12	19	1421-122-003-00	10	10	1427-212-002-00	21	6
	38	5	1421-403-007-00	41	19		22	6
	39	5		41	32	1427-212-003-20	21	2
1326-708-005-00	41	18	1421-403-008-00	41	20		22	2
1342-402-006-00	30	8	1421-433-004-00	11	23		25	18
	47	26A		12	26	1427-251-004-00	16	5
	62	9	1421-602-005-10	29	6	1427-301-002-20	31	1
	62	14		35	39	1427-301-004-00	31	3
	62	18	1421-603-004-00	6	17	1427-301-005-00	31	4
	63	9	1421-906-001-00	76	1	1427-301-006-00	31	5
	63	16	1421-951-006-00	41	22	1427-301-007-00	31	6
1376-402-003-00	47	26		41	34	1427-301-009-00	31	7
	62	8	1421-951-007-00	41	23	1427-301-011-10	31	14
	62	13		41	35	1427-301-012-10	31	15
	62	17	1423-621-003-00	56	14	1427-301-013-10	31	16
	63	8	1424-101-203-00	1	27	1427-301-014-10	31	19
	63	13	1424-101-204-00	1	28	1427-301-015-00	31	20
	63	15	1425-621-004-00	1	32	1427-301-016-00	31	21
1386-241-002-00	42	4		30	9	1427-301-018-00	31	23
1401-906-005-00	76	2		35	17	1427-301-019-00	31	27
1403-621-031-00	56	6		47	27	1427-301-021-00	31	30
	56	8		52	11	1427-307-002-10	33	2
	56	10		59	16	1427-307-003-00	33	3
	56	12		60	8	1427-310-001-00	34	2
1404-117-008-00	7	4		61	9		34	9
1404-312-006-00	35	6		62	10	1427-310-002-10	34	15

PART CODE	FIG.	KEY	PART CODE	FIG.	KEY	PART CODE	FIG.	KEY
1427-310-003-10	34	6	1444-621-016-00	52	3	1560-404-002-30	35	10
	34	13	1444-621-311-00	57	7	1560-515-004-40	47	24
1427-310-220-10	34	3	1444-621-312-00	57	8	1560-530-250-00	59	12
	34	10	1444-621-313-00	57	9		61	5
1427-310-230-00	34	4	1444-621-320-00	57	10	1560-601-014-30	48	10
1427-310-270-00	34	11	1480-207-012-00	20	6	1560-601-017-00	48	9
1427-401-001-00	41	3	1480-212-003-00	25	8	1560-602-001-40	48	2
1427-431-003-00	41	6	1480-604-204-00	51	5	1560-604-022-70	51	14
1427-433-022-00	41	48	1488-611-001-00	53	12	1560-664-264-00	62	6
1427-433-023-00	41	42	1488-621-220-10	57	2		62	24
1427-433-025-00	41	39	1491-120-001-00	8	18		63	6
	41	45	1491-203-006-10	14	14		63	22
1427-433-240-10	41	37		15	16	1560-664-270-00	58	4
1427-433-241-00	37	5	1491-307-201-00	33	4		59	4
	37	11	1491-623-222-00	59	10	1560-666-005-00	6	12
1427-433-250-10	41	43	1491-623-223-00	59	9	1560-666-006-00	6	13
1427-621-002-10	6	2	1510-328-260-00	35	22	1560-666-212-00	62	3
1427-621-012-00	54	6	1518-621-320-00	57	20		62	12
1427-934-013-00	69	11		58	1		62	16
1427-941-016-00	68	11		59	1		63	3
1432-242-001-00	35	38		60	1		63	12
1432-651-028-00	59	17		61	1	1560-695-021-00	27	6
	60	5	1527-604-002-00	50	17		28	6
1434-122-007-00	10	9		51	3	1560-695-022-00	27	7
1434-310-220-00	34	1	1544-104-205-00	3	4		28	7
	34	8	1544-123-005-00	10	6	1561-121-212-40	8	31
1434-317-281-00	33	12	1544-219-005-00	17	15	1564-530-430-00	59	11
	33	15	1544-304-006-10	31	10		60	4
1434-317-290-01	33	11	1544-322-002-00	19	13		61	4
	33	14		20	7	1568-132-200-00	35	34
1434-503-004-10	47	2		20	17	1572-102-003-00	4	9
1434-503-320-10	47	1		20	30	1575-261-016-00	80	6
1434-503-330-00	47	3	1544-623-001-00	57	12	1575-261-017-00	80	5
1435-122-002-00	8	19	1544-623-232-00	57	13	1575-261-025-00	80	7
1435-203-001-00	19	7	1544-623-233-00	57	14	1575-623-010-00	62	22
	20	22	1544-623-234-00	57	15		63	20
1444-101-016-10	30	6	1544-623-235-00	57	16	1575-623-210-00	57	1
	38	20	1560-104-010-40	1	26	1575-623-211-00	57	11
	39	20	1560-111-003-20	5	19	1575-623-250-00	59	8
1444-102-204-00	4	6	1560-132-007-30	27	8	1579-112-230-00	6	7
1444-314-009-10	11	33		28	8	1581-621-290-00	57	24
	12	36		35	12	1593-102-004-20	1	24
	25	28	1560-208-018-40	19	12	1593-112-002-50	6	3
1444-411-006-00	31	2		20	29	1593-112-200-10	6	1
1444-601-015-00	49	7	1560-401-004-40	50	8	1593-203-058-20	15	13

1688-097-100-10

PART CODE	FIG.	KEY	PART CODE	FIG.	KEY	PART CODE	FIG.	KEY
1593-203-058-20	16	1	1612-201-002-00	11	31	1640-674-202-00	60	10
	20	32	1612-603-002-00	50	13		61	11
1593-411-001-10	42	7	1612-603-005-00	50	25	1640-674-203-00	60	11
1593-411-053-20	42	8	1612-690-001-00	5	15		61	12
1593-411-610-10	42	2	1614-102-213-00	1	3	1640-674-204-00	60	12
1593-623-203-00	62	23	1614-102-214-00	1	4		61	13
	63	21	1614-104-001-00	3	6	1640-674-205-00	60	13
1593-623-503-00	62	5	1614-117-001-00	7	2		61	14
	63	5	1614-241-004-00	16	4	1640-674-206-00	60	14
1593-623-530-00	60	16	1614-262-003-00	26	15		61	15
	61	17	1614-501-015-10	43	8	1640-902-006-00	65	11
1594-105-001-00	2	2		44	7		66	11
1594-218-001-00	14	13	1614-603-008-00	50	16		67	11
	15	15	1614-603-018-00	50	7	1640-903-005-10	69	15
	21	3	1614-603-051-00	50	1	1640-903-006-00	69	2
	22	3	1614-603-052-00	50	2	1640-903-007-00	69	3
1594-654-261-10	55	21	1614-603-201-10	50	14	1640-903-008-00	69	4
1594-904-025-00	68	13	1614-690-202-00	62	2	1640-903-009-00	69	5
	69	14		63	2	1640-903-011-00	69	6
	70	14	1617-102-006-00	1	30	1640-903-012-00	69	7
1600-112-231-00	6	8	1620-255-208-00	17	3	1640-903-013-00	69	8
1600-112-232-00	6	9		23	3	1640-903-015-00	69	9
1600-117-002-00	7	3		24	3	1640-903-016-00	69	10
1600-120-220-00	8	29		25	24	1640-903-019-10	69	12
1600-120-222-00	8	30	1620-272-051-00	29	8	1640-903-025-10	70	15
1600-120-230-00	8	28	1620-410-001-10	40	4	1640-903-026-00	70	2
1600-616-006-00	5	14	1620-903-003-00	65	9	1640-903-027-00	70	3
1600-622-321-00	55	16		66	9	1640-903-028-00	70	4
1600-623-002-00	57	22		67	9	1640-903-029-00	70	5
1600-623-200-00	57	17	1620-904-006-00	68	12	1640-903-031-00	70	7
1600-623-210-00	57	18	1620-904-007-00	69	13	1640-903-032-00	70	6
1600-623-220-00	57	19	1620-904-008-00	70	13	1640-903-033-00	70	8
1600-624-004-00	62	7	1620-904-009-00	71	13	1640-903-035-00	70	9
	63	7	1620-904-011-10	65	8	1640-903-036-00	70	11
1600-902-023-00	70	10		66	8	1640-903-039-00	70	12
1602-242-551-10	27	5		67	8	1640-903-045-00	68	15
	28	5	1620-904-012-00	72	13	1640-903-046-00	69	16
1608-901-004-10	64	6	1620-904-013-00	73	13	1640-903-047-00	70	16
1612-102-005-00	1	11	1620-904-014-00	74	13	1640-903-048-00	71	16
1612-105-002-00	4	17	1620-904-015-00	75	13	1640-903-052-00	71	14
1612-111-001-00	1	10	1637-102-202-00	1	2	1640-903-055-10	71	15
	5	16	1640-674-001-00	60	15	1640-903-056-00	71	2
1612-111-002-10	5	17		61	16	1640-903-057-00	71	3
1612-111-230-10	5	20	1640-674-200-00	60	9	1640-903-058-00	71	4
1612-117-200-20	7	1		61	10	1640-903-059-00	71	5

PART CODE	FIG.	KEY	PART CODE	FIG.	KEY	PART CODE	FIG.	KEY
1640-903-061-00	71	7	1640-905-007-00	73	3	1650-652-253-20	62	21
1640-903-062-00	71	6	1640-905-008-00	73	4		63	19
1640-903-063-00	71	8	1640-905-009-00	73	5	1656-401-220-00	36	1
1640-903-065-00	71	9	1640-905-011-00	73	6	1656-401-222-00	36	2
1640-903-066-00	71	11	1640-905-012-00	73	7	1672-102-004-00	1	12
1640-903-067-00	71	10	1640-905-013-00	73	8	1672-105-001-10	4	13
1640-903-069-00	71	12	1640-905-015-00	73	9	1672-105-210-00	4	1
1640-903-072-00	72	14	1640-905-016-00	73	10	1672-111-001-00	5	18
1640-903-075-10	72	15	1640-905-017-00	73	11	1672-111-002-00	5	4
1640-903-076-00	72	2	1640-905-019-00	73	12	1672-111-200-00	5	1
1640-903-077-00	72	3	1640-905-022-00	74	14	1672-111-210-10	5	5
1640-903-078-00	72	4	1640-905-025-10	74	15	1672-111-230-00	5	21
1640-903-079-00	72	5	1640-905-026-00	74	2	1672-112-220-20	6	11
1640-903-081-00	72	6	1640-905-027-00	74	3	1672-120-002-10	8	14
1640-903-082-00	72	7	1640-905-028-00	74	4	1672-120-003-00	8	15
1640-903-083-00	72	8	1640-905-029-00	74	5	1672-120-004-00	8	16
1640-903-085-00	72	9	1640-905-031-00	74	6	1672-120-006-00	8	20
1640-903-086-00	72	10	1640-905-032-00	74	7	1672-120-220-00	8	12
1640-903-087-00	72	11	1640-905-033-00	74	8	1672-122-002-00	10	15
1640-903-089-00	72	12	1640-905-035-00	74	9	1672-201-003-00	11	30
1640-903-091-00	72	16	1640-905-036-00	74	10	1672-208-001-00	26	14
1640-903-092-00	73	16	1640-905-037-00	74	11	1672-208-220-00	26	12
1640-903-093-00	74	16	1640-905-039-00	74	12	1672-211-009-10	19	17
1640-903-094-00	75	16	1640-905-042-00	75	14	1672-212-001-00	21	1
1640-904-005-10	68	14	1640-905-045-10	75	15		22	1
1640-904-006-00	68	2	1640-905-046-00	75	2	1672-212-002-10	21	4
1640-904-007-00	68	3	1640-905-047-00	75	3	1672-301-001-00	31	29
1640-904-008-00	68	4	1640-905-048-00	75	4	1672-301-002-00	31	8
1640-904-009-10	68	5	1640-905-049-00	75	5	1672-403-003-00	37	12
1640-904-011-00	68	6	1640-905-051-00	75	6	1672-407-220-00	36	10
1640-904-012-00	68	8	1640-905-052-00	75	7	1672-408-200-00	38	8
1640-904-013-00	68	7	1640-905-053-00	75	8	1672-408-210-00	38	6
1640-904-016-00	68	10	1640-905-055-00	75	9		39	6
1640-904-019-00	68	9	1640-905-056-00	75	10	1672-508-262-00	47	13
1640-904-022-00	68	1	1640-905-057-00	75	11	1672-508-263-00	47	14
1640-904-023-10	69	1	1640-905-059-00	75	12	1672-508-264-00	47	16
1640-904-024-00	70	1	1650-104-201-00	3	5	1672-508-270-10	47	12
1640-904-025-00	71	1	1650-203-008-00	20	14	1672-601-001-00	51	19
1640-904-026-00	72	1	1650-253-003-00	18	3	1672-601-002-00	51	20
1640-904-027-00	73	1		18	6	1672-602-002-00	49	18
1640-904-028-00	74	1	1650-508-002-00	77	14	1672-602-210-00	49	10
1640-904-029-00	75	1		78	10	1672-602-230-00	49	16
1640-905-002-00	73	14		79	10	1672-602-240-00	49	11
1640-905-005-10	73	15	1650-650-246-00	62	20	1672-602-250-10	49	19
1640-905-006-00	73	2		63	18	1672-603-005-00	50	19

PART CODE	FIG.	KEY	PART CODE	FIG.	KEY	PART CODE	FIG.	KEY
1672-603-006-00	50	15	1675-602-003-00	49	1	1682-508-300-00	47	1A
1672-603-007-00	50	21	1675-602-004-00	49	4	1682-603-006-00	50	5
1672-603-200-00	50	18	1675-602-005-00	49	5	1682-604-007-10	51	24
1672-604-003-00	51	10	1675-602-007-00	49	9	1682-606-230-10	52	14
1672-604-005-00	51	18	1678-901-004-00	64	5	1682-606-250-20	52	1
1672-604-006-00	51	23	1681-434-001-00	41	12	1682-606-260-20	52	2
1672-604-007-00	51	22		41	26	1682-606-260-30	52	2A
1672-604-008-00	51	21	1682-102-003-00	1	6	1682-606-270-10	52	12
1672-604-220-00	51	25	1682-102-004-00	1	23	1682-616-320-50	54	13
1672-606-001-00	52	4	1682-103-200-00	2	1	1682-640-210-10	51	29
1672-606-002-00	52	5	1682-104-001-00	3	7	1682-660-003-00	55	15
1672-608-003-00	53	7	1682-104-200-00	3	11	1682-660-220-00	55	7
1672-608-200-00	53	5	1682-111-210-00	5	9	1682-670-001-00	56	1
1672-608-210-01	53	1	1682-111-210-10	5	9A	1682-670-210-00	56	7
1672-608-220-01	53	3	1682-111-300-00	5	8	1682-670-220-00	56	9
1672-616-002-00	54	5	1682-112-001-00	6	16	1682-670-230-00	56	11
1672-616-003-00	54	7	1682-112-006-00	6	4	1682-670-250-10	56	2
1672-670-200-00	56	3	1682-255-002-10	25	7	1682-690-240-10	62	30
1674-619-300-10	51	28	1682-255-201-00	25	1		63	27
1674-652-200-00	55	1	1682-255-201-10	25	1A	1682-690-300-30	62	1
1674-652-202-00	55	2	1682-255-202-00	25	6		63	1
1674-654-200-00	55	3	1682-255-203-00	25	5	1682-690-310-30	62	11
1674-654-211-00	55	4	1682-255-204-00	25	10		63	11
	55	10	1682-255-205-10	25	11	1682-690-350-00	57	25
	55	13	1682-255-210-30	25	21	1682-690-360-10	62	25
1674-654-212-00	55	5	1682-255-210-40	25	21A		63	28
	55	11	1682-306-001-00	32	1	1682-902-004-00	65	10
	55	14	1682-306-002-00	32	2		66	10
1674-654-240-00	55	9	1682-307-001-10	33	1		67	10
1674-654-260-00	55	12	1682-312-004-10	35	28	1682-902-006-00	65	7
1674-654-270-00	55	18	1682-312-260-00	35	14		66	7
1674-654-271-00	55	19	1682-312-300-00	35	24		67	7
1674-654-272-00	55	20	1682-312-310-00	35	26	1682-902-007-20	65	12
1674-664-200-00	57	27	1682-403-001-30	37	18		66	12
1675-102-002-00	1	8	1682-403-200-30	37	1		67	12
1675-102-004-00	1	17	1682-403-220-30	37	2	1682-902-009-00	67	2
1675-102-006-00	1	20	1682-403-250-20	37	8	1682-902-014-00	65	4
1675-102-200-00	1	1	1682-407-200-10	36	6		66	4
1675-104-002-00	3	9	1682-407-210-10	36	13		67	4
1675-104-210-00	3	1	1682-407-220-00	36	10A	1683-102-002-00	1	7
1675-104-211-00	3	2	1682-408-220-00	38	19	1683-102-200-20	1	14
1675-104-213-00	3	3		39	19	1683-102-210-20	1	15
1675-116-001-00	7	12	1682-434-033-00	41	13	1683-112-200-20	6	14
1675-117-210-10	7	9		41	27	1683-112-200-30	6	14A
1675-601-003-00	48	5	1682-508-002-00	47	4	1683-120-051-00	8	24

PART CODE	FIG.	KEY	PART CODE	FIG.	KEY	PART CODE	FIG.	KEY
1683-120-500-10	8	1	1683-202-534-00	13	38	1683-271-001-30	28	20
1683-120-530-10	8	25	1683-202-535-00	13	39	1683-271-500-30	27	11
1683-120-530-20	8	25A	1683-202-536-00	13	41		28	11
	9	12	1683-202-537-00	13	42	1683-271-520-10	27	12
1683-122-051-20	10	12	1683-202-538-00	13	44		28	12
1683-122-500-20	10	1	1683-203-051-00	14	2	1683-271-560-00	27	4
1683-201-051-00	11	1		15	2		28	4
1683-201-051-10	11	1A	1683-203-052-00	14	4	1683-272-052-00	29	3
1683-201-052-10	11	18		15	4	1683-272-053-00	29	14
1683-201-052-20	11	18A	1683-203-053-00	14	5	1683-272-054-10	29	13
1683-201-053-10	11	22		15	5	1683-272-550-00	29	12
	12	25	1683-203-054-00	14	6	1683-272-560-00	29	9
1683-202-051-00	14	1		15	6	1683-273-054-00	30	10
	15	1	1683-203-055-00	14	11	1683-273-057-20	30	15
1683-202-500-00	13	1	1683-203-500-00	14	10	1683-273-058-00	30	4
1683-202-501-00	13	2	1683-208-051-10	17	8	1683-273-520-30	30	14
1683-202-502-00	13	3	1683-208-053-00	17	13	1683-273-570-10	30	2
1683-202-503-00	13	4	1683-208-500-00	17	1		30	5
1683-202-504-00	13	5		23	1		45	5
1683-202-505-00	13	6		24	1	1683-273-590-00	30	1
1683-202-506-00	13	7	1683-208-510-00	17	5	1683-273-630-10	30	3
1683-202-507-00	13	8	1683-208-540-00	17	11	1683-273-640-00	13	45
1683-202-508-00	13	9	1683-209-520-00	23	6		38	10
1683-202-509-00	13	10	1683-210-051-00	18	1		39	12
1683-202-511-00	13	11	1683-210-052-00	18	2	1683-301-500-00	31	28
1683-202-512-00	13	12	1683-210-053-00	18	5	1683-301-510-00	31	33
1683-202-513-00	13	13	1683-211-052-20	19	8	1683-312-002-00	35	16
1683-202-514-00	13	14	1683-211-053-10	19	9	1683-312-003-00	35	18
1683-202-515-00	13	15	1683-211-054-00	19	10	1683-312-530-30	35	29
1683-202-516-00	13	16	1683-211-058-00	19	2	1683-312-560-10	35	30
1683-202-517-00	13	17	1683-211-058-10	19	2A	1683-312-570-00	35	11
1683-202-518-00	13	18	1683-216-051-10	23	14	1683-312-580-00	35	9
1683-202-519-00	13	19		24	13	1683-601-001-00	48	6
	13	33	1683-216-052-00	23	9	1683-601-002-00	48	3
1683-202-521-00	13	20	1683-216-053-00	58	3	1683-601-200-10	48	1
1683-202-522-00	13	21		59	3	1683-602-001-00	49	3
1683-202-523-00	13	22	1683-216-500-00	23	16	1683-602-002-00	49	2
1683-202-524-00	13	26		24	15	1683-602-003-00	49	6
1683-202-525-00	13	29	1683-216-520-00	23	12	1683-602-220-00	49	14
1683-202-526-00	13	30	1683-265-051-00	26	4	1683-603-052-00	50	4
1683-202-527-00	13	31	1683-265-500-20	26	8	1683-603-510-00	50	3
1683-202-528-00	13	32	1683-265-510-00	24	5	1683-604-004-00	51	17
1683-202-531-00	13	35		26	1	1683-604-200-20	51	8
1683-202-532-00	13	36	1683-265-520-00	26	7	1683-604-210-20	51	9
1683-202-533-00	13	37	1683-271-001-30	27	22	1683-604-230-00	51	26

PART CODE	FIG.	KEY	PART CODE	FIG.	KEY	PART CODE	FIG.	KEY
1683-604-240-10	51	1	1688-211-503-00	80	2	1688-501-310-10	44	1
1683-604-250-10	51	2	1688-211-504-00	80	3	1688-507-001-00	46	1
1683-611-500-30	53	8	1688-211-505-00	80	4	1688-507-001-10	46	1A
1683-616-500-20	54	1	1688-211-506-00	80	8	1688-508-200-00	47	8
1683-616-520-10	54	14	1688-211-507-00	80	9	1688-508-210-00	47	25
1683-690-620-10	63	14	1688-211-508-00	80	10	1688-508-210-10	47	25A
1683-902-001-00	65	1	1688-211-509-00	80	11	1688-611-210-20	53	10
	66	1	1688-211-510-10	20	3	1688-611-500-00	53	13
	67	1	1688-211-521-00	80	12	1688-616-510-10	54	2
1683-902-002-00	65	2	1688-211-522-00	80	13	1688-616-520-10	54	12
	66	2	1688-211-523-00	80	14	1688-690-340-10	62	19
1683-902-003-00	65	5	1688-212-001-10	22	4		63	17
	66	5	1688-216-051-00	24	8	1688-690-620-00	62	15
	67	5	1688-216-500-00	24	11	1688-690-620-10	62	15A
1683-902-004-00	65	3	1688-271-510-00	27	1	1688-690-630-00	59	18
	66	3		28	1	1688-901-001-00	64	1
	67	3	1688-271-580-00	27	18	1688-901-002-00	64	2
1683-902-005-00	65	6		28	18	1688-901-003-00	64	3
	66	6	1688-271-590-10	27	20	1688-902-002-00	66	13
	67	6	1688-272-500-10	29	1		67	13
1688-120-051-00	9	11	1688-272-500-20	29	1A	2101-230-001-00	31	34
1688-120-052-00	9	10	1688-272-530-10	29	4	2130-208-004-00	17	18
1688-120-500-10	9	1	1688-310-001-00	34	17	2130-931-200-00	76	9
1688-201-051-10	12	1	1688-312-001-00	35	3	2130-931-210-00	76	4
1688-201-052-00	12	18	1688-312-510-20	35	1	2139-505-002-00	54	4
1688-201-055-00	11	2A	1688-408-001-00	38	1	2142-420-008-00	46	2
	12	2		39	1	2144-419-022-00	17	16
1688-201-056-00	11	30A	1688-408-200-10	38	16		26	10
	12	33		39	16	2144-519-007-00	23	19
1688-203-055-00	15	11	1688-408-210-00	39	8		24	18
1688-203-500-00	15	10	1688-408-220-00	39	9	2149-601-031-00	23	18
1688-211-001-00	19	1	1688-410-200-20	40	1		24	17
1688-211-002-00	19	5	1688-433-002-00	41	31	2500-901-027-00	64	7
1688-211-051-00	20	5	1688-433-003-00	41	17	2502-105-002-00	4	14
1688-211-052-00	20	10	1688-433-200-00	41	5	2703-101-020-00	25	22
1688-211-053-00	20	9	1688-433-211-00	41	36	3505-605-007-00	53	6
1688-211-054-00	20	20	1688-433-211-10	41	36A	3560-503-302-00	54	9
1688-211-055-00	20	25	1688-433-220-10	41	10	3610-440-018-00	7	8
1688-211-056-10	20	26	1688-433-230-10	41	24	3621-702-003-00	41	14
1688-211-057-00	20	4	1688-433-240-00	41	1		41	28
1688-211-058-00	20	2	1688-440-501-00	42	1	3625-701-003-00	25	20
1688-211-059-00	20	27	1688-501-001-00	43	2	3640-585-001-00	23	17
1688-211-061-00	20	36		44	3		24	16
1688-211-500-00	20	1	1688-501-210-00	43	1	3643-420-004-00	27	13
1688-211-502-00	80	1	1688-501-210-10	43	1A		28	13

PART CODE	FIG.	KEY	PART CODE	FIG.	KEY	PART CODE	FIG.	KEY
3645-383-001-00	59	13						
	61	6						
3650-106-002-00	20	23						
3650-261-261-00	62	4						
	63	4						
3650-270-214-00	56	4						
3652-271-220-00	56	5						
3656-107-004-00	20	12						
3656-271-001-00	58	5						
	59	5						
3667-354-220-10	30	11						
3667-354-240-00	30	12						
3668-612-001-00	17	12						
	23	13						
	24	12						
	26	9						
	35	25						
	35	27						
3670-236-003-00	52	16						
3737-172-011-00	36	9						
3737-211-007-00	16	3						
3747-342-002-00	27	14						
	28	14						
3768-185-022-10	37	17						
4101-102-038-00	50	11						
7955-201-026-00	32	10						
	46	3						

DESCRIPTION	REF	NO
ARM/CONTROL	20	37
ARM/TENSION	20	23
ARM,FLOATING	20	18
ARMATURE	26	3
BALL	1	9
	26	15
BEARING	27	5
	27	10
BEARING/CONN ROD	13	8
BEARING/CONN ROD/UN	6	5
	6	6
BEARING/CRANK/LOWER	5	12
BEARING/CRANK/UPPER	5	11
BEARING/WATER PUMP	17	3
BEARING/WATERPUMP	17	4
BEARING,BALL	26	4
	26	5
BEARING,RB/6002SS	15	8
BEARING,RB/6004	20	12
BEARING,RB/6005	9	52
BEARING,RB/6203	20	11
BEARING,THRUST CRANK	5	13
	6	2
	6	4
BELT/VHM34.5/FAN	18	5
BODY/OILPUMP	16	2
BODY/WATERPUMP	17	2
BOLT	3	4
	5	2
	5	26
	9	46
	11	19
	15	9
	15	13
	15	16
	16	7
	17	32
	22	8
	25	54
	27	9
	27	11
	27	19
	27	20
	27	21
	27	22
	27	24
BOLT/L=55	9	11
BOLT/M10X1.25X82	1	11

DESCRIPTION	REF	NO
BOLT/M6	9	35
	9	36
BOLT/M6X10	20	16
BOLT/M6X18	20	7
BOLT/M8X20	3	3
	9	14
	17	19
	17	27
	22	3
BOLT/M8X30	9	18
BOLT/M8X45	11	20
BOLT/M8X75	9	16
	17	28
BOLT/M8X85	9	10
BOLT/WS	16	6
	18	4
	26	18
BOLT/WSP	22	5
BOLT,CONN ROD	13	6
BOLT,JOINT	16	13
BOLT,SEMS/M10X20	8	3
	10	2
BOLT,SEMS/M6X12	7	4
	12	5
	20	14
	23	7
BOLT,SEMS/M6X16	9	40
BOLT,SEMS/M8X16	16	11
BOLT,SEMS/M8X25 7T	4	3
BOLT,SEMS/M8X45	9	15
	17	13
BRACKET ROCKER SHAFT	11	13
BRACKET,ROCKER SHAFT	11	14
BRUSH	27	17
BULBE GUIDE	1	6
BUSH	27	15
CAMSHAFT/INJPUMP	20	8
CAP,BLANK/30	9	41
CAP,OIL FILLER	2	2
CAP,SEALING	1	3
	5	3
	5	4
	5	7
CARTRIDGE,OIL FILTER	16	15
CASE/ADAPTER	20	24
CENTER CRANK PULLEY	15	12
CLAMP/WIRE/10-15	17	23
CLAMP,HARNESS	9	17

DESCRIPTION	REF	NO
CLAMP,STRAINER	16	10
COLLOR	27	3
CONNECTOR/FUEL	21	1
CONNECTOR/OILFILTER	9	2
CONNECTOR,GLOW PLUG	23	4
CONTROLSLEEVE	25	51
COVER	9	55
	27	13
COVER/INJECTIONPUMP	5	24
COVER,BEARING	27	6
COVER,CYLINDER HEAD	2	1
CRANKSHAFT ASSY	15	1
CUP/SEALING/16	9	4
CUTTER,VALVE	11	5
CYLINDERBLOCK ASSY	5	1
CYLINDERHEAD ASSY	1	1
DELIVERYVALVE	25	3
DOWEL	5	21
DRIVE/TACHOMETE ASSY	9	38
EYEBOLT	25	52
FAN/COOLING	18	1
FLYWEIGHT	20	15
FLYWHEEL ASSY	15	5
FRAME	27	12
FRAME ASSY	27	7
FRAME,STARTER END	26	11
GASKET	17	8
	23	6
	24	16
	25	5
	25	53
	25	55
	25	57
GASKET/COVER	5	25
	9	56
GASKET/CYLINDERHEAD	1	10
GASKET/HOUSING	17	26
GASKET/PLATE	9	45
GASKET/SPACER	17	17
GASKET/WATER PUMP	17	12
GASKET,EXH.MANIFOLD	4	2
GASKET,GEAR CASE	9	30
GASKET,INLET MANIFOL	3	2
GASKET,NOZZLE	19	2
GEAR/OILPUMP ASSY	16	3
GEAR,CAMSHAFT	12	2
GEAR,CRANK SHAFT	15	3
GEAR,IDLE	12	6

DESCRIPTION	REF	NO
GEAR,INJ PUMP	20	9
GEARCASE ASSY	9	1
GENERATOR ASSY	22	1
GLOWPLUG	23	3
GUIDE,VALVE	1	7
HANGER	10	1
HOLDER ASSY	27	14
HOLDER BRUSH ASSY	26	9
HOLDER DELIVERY VALV	25	6
HOLDER/NOZZLE ASSY	24	1
HOLDER,BRUSH ASSY	27	16
HOSE/RABBER	2	6
HOSE/RUBBER	17	22
HOUSING/THERMOSTAT	17	24
HOUSING,PUMP	25	1
HOUSING,STARTER ASSY	26	7
INJECTIONNOZZLE ASSY	19	1
INJECTIONPUMP ASSY	20	1
KEY	12	3
	15	4
	20	10
LEVELGAGE	5	28
LEVER/CONTROL COMP	20	34
LINK,CONTROL	20	19
MANIFOLD(INLET) ASSY	3	1
MANIFOLD,EXH	4	1
METAL,CRANK SET	5	10
	6	1
	6	3
NIPPLE	5	22
NOZZLE	24	18
NUT	9	37
	11	18
	20	38
	24	17
	26	20
	27	2
	27	23
	27	25
NUT/FLANGE	13	7
NUT/M10	22	6
	22	9
NUT/M8	9	12
	9	21
	9	53
	9	57
	11	21
	17	14

DESCRIPTION	REF . NO	
NUT/M8	17	20
	26	22
NUT,CAP	2	4
NUT,CAP/M 8	9	22
NUT,RETAINING	24	15
O-RING	9	43
	17	31
	25	7
	25	10
O-RING 1A S50	9	48
O-RING/P 8	20	35
O-RING/P15	16	9
O-RING/P18	7	3
PACKING	2	5
	9	23
	16	14
PAN,OIL COMP	7	1
PIECE,THRUST	20	17
PIN	5	16
	5	17
	5	18
	8	4
	9	8
	9	26
	15	2
	15	7
	25	9
	25	13
PIN/ADAPTER	20	25
PIN/ARM	9	24
PIN/IDLEGEAR	5	6
PIN/SNAP	9	25
PIN/STRAIGHT	16	5
PIN,CONTROL	20	20
PIN,GROOVE	9	29
PIN,PISTON	13	3
PIN,STARTING SPRING	5	27
PIN,TUBE	5	15
	9	49
PINION,STARTER	26	12
PIPE/FUEL	21	2
PIPE/INJECTION ASSY	19	3
	19	4
	19	5
PIPE/WATER PUMP	17	11
PIPE/WATERDRAIN	5	23
PIPE,OIL	16	12
PIPE,PUMP HOUSING	17	25

DESCRIPTION	REF . NO	
PIPE,WATER OUTLET	17	30
PISTON	13	1
PISTON/OV	14	1
	14	3
PISTON/RELIEF VALVE	9	32
PLATE	25	33
	25	34
	25	35
	25	36
	25	37
	25	38
	25	39
	25	40
	25	41
	25	42
	25	43
	25	44
	25	45
	25	46
	25	47
	25	49
	27	8
PLATE FRONT	9	44
PLATE/ADJUST	22	2
PLATE/REAR	8	1
PLATE/T=1.80	25	18
PLATE/T=1.85	25	19
PLATE/T=1.90	25	20
PLATE/T=1.95	25	21
PLATE/T=2.00	25	22
PLATE/T=2.05	25	23
PLATE/T=2.10	25	24
PLATE/T=2.15	25	25
PLATE/T=2.20	25	26
PLATE/T=2.25	25	27
PLATE/T=2.30	25	28
PLATE/T=2.35	25	29
PLATE/T=2.40	25	30
PLATE/T=2.45	25	31
PLATE/T=2.50	25	32
PLATE/WATER PUMP	17	9
PLATE,THRUST	12	4
PLATE,THRUST INJPUMP	20	13
PLUG	5	5
	9	3
	9	27
	11	12
	25	56

DESCRIPTION	REF . NO	
PLUG(HOT) ASSY	1	2
PLUG(M14X15)	7	2
PLUG/PT1/2	1	4
PLUG/PT3/4	5	30
PLUNGER ASSY	25	2
POINTER	8	2
PULLEY	15	11
	27	1
PULLEY ASSY	15	10
PULLEY,WATER PUMP	18	2
PUMP,OIL ASSY	16	1
REGULATOR ASSY	27	26
RELAY,SOLENOID	23	8
RETAINER	26	14
RING(PISTON) SET	13	2
RING(PISTON/OV)SET	14	4
RING(PISTON/OV50)SET	14	2
RING/O	9	39
RING,SNAP	13	4
	25	14
RING,SNAP/ 4 E	20	21
	20	32
RING,SNAP/12 C	9	34
RING,SNAP/16 C	11	16
RINGGEAR	15	6
ROCKERARM	11	9
ROD,CONNECTING	13	5
ROD,CONTROL	25	48
ROD,PUSH	11	7
RORA	26	13
ROTOR ASSY	27	4
ROTOR/OUTER	16	4
ROTOR/WATERPUMP	17	6
SCREW	25	11
	25	50
	26	17
SCREW ADJUST	11	17
SCREW/WATER PUMP	17	10
SCREW/WS	26	19
SEAL SET/WATER PUMP	17	5
SEAL/WATER PUMPPULLE	17	7
SEAL,BEARING CAP	5	8
SEAL,BEARING CAP/7	5	9
SEAL,CYL.HEAD COVER	2	3
SEAL,OIL	1	8
	5	14
	9	9
SEAT,SPRING	24	2

DESCRIPTION	REF . NO	
SEAT,SPRING	25	16
	25	17
SEAT,VALVE	1	5
SEAT,VALVE SPRING	11	4
SHAFT/HYDRAULIC ASSY	9	51
SHAFT/ROCKERARM	11	11
SHAFT,CAM	12	1
SHAFT,ROCKER ASSY	11	8
SHAFT,ROCKER ARMASSY	11	10
SHIM/ADAPTER	20	30
	20	31
SHIM/T=0.1	24	4
SHIM/T=0.2	24	5
SHIM/T=0.3	24	6
SHIM/T=0.4	24	7
SHIM/T=0.5	24	8
SHIM/T=0.52	24	9
SHIM/T=0.54	24	10
SHIM/T=0.56	24	11
SHIM/T=0.58	24	12
SHIM/T=0.8	24	13
SHIM,ADAPTER	20	27
	20	28
	20	29
SHIM,INJECTION PUMP	20	2
	20	3
	20	4
	20	5
	20	6
SLEEVE,FRANGE	25	8
SOLENOID	23	5
SPACER	9	47
	24	14
SPACER/FAN/48	18	3
SPACER,OIL FILTER	9	42
SPACER,WATER PUMP	17	16
SPRING	11	15
	26	16
	27	18
SPRING ADAPTER	20	26
SPRING DELIVERY VALV	25	4
SPRING/GOVERNER	20	33
SPRING/RELIEF VALVE	9	33
SPRING,BRUSH	26	10
SPRING,NOZZLE	24	3
SPRING,PLUNGER	25	15
SPRING,RETURN	20	36
SPRING,SETTING	20	22

DESCRIPTION	REF . NO		DESCRIPTION	REF . NO	DESCRIPTION	REF . NO	DESCRIPTION	REF . NO
SPRING,STARTING	20	41						
SPRING,VALVE	11	3						
STARTER ASSY	22	7						
STARTER KIT	26	2						
	26	6						
STOPPER/FULLLOAD	9	20						
STRAINER	16	8						
STUD	5	19						
	5	29						
	8	5						
	9	5						
	9	6						
	9	7						
	9	50						
	17	18						
STUD/M8X40	5	20						
STUD,HEAD COVER	1	12						
SWITCH/OILPRESSURE	23	1						
SWITCH/OVERHEAT	23	2						
SWITCH,STARTER ASSY	26	8						
TAPPET	11	6						
	25	12						
THERMOSTAT	17	29						
VALVE/RELIEF ASSY	9	31						
VALVE,EXHAUST	11	2						
VALVE,INTAKE	11	1						
WASHER	9	13						
	9	54						
	9	58						
	15	15						
	17	15						
	17	21						
	26	21						
WASHER / M6	20	39						
WASHER/08X14X01	9	19						
	9	28						
WASHER/08X15.5X1.6	11	22						
WASHER/9X22X2	22	4						
WASHER,SP/M10	22	10						
WASHER,SP/M6	15	14						
	20	40						
WATERPUMP ASSY	17	1						
YOKE/STARTER	26	1						

DESCRIPTION	REF . NO		DESCRIPTION	REF . NO		DESCRIPTION	REF . NO		DESCRIPTION	REF . NO	
ARM/CONTROL	20	37	BOLT/M6	9	36	CLAMP,STRAINER	16	10	GEARCASE ASSY	9	1
ARM/TENSION	20	23	BOLT/M6X10	20	16	COLLOR	27	3	GENERATOR ASSY	22	1
ARM,FLOATING	20	18	BOLT/M6X18	20	7	CONNECTOR/FUEL	21	1	GLOWPLUG	23	3
ARMATURE	26	3	BOLT/M8X20	3	3	CONNECTOR/OILFILTER	9	2	GUIDE,VALVE	1	7
BALL	1	9		9	14	CONNECTOR,GLOW PLUG	23	4	HANGER	10	1
	26	15		17	19	CONTROLSLEEVE	25	51	HOLDER ASSY	27	14
BEARING	27	5		17	27	COVER	9	55	HOLDER BRUSH ASSY	26	9
	27	10		22	3		27	13	HOLDER DELIVERY VALV	25	6
BEARING/CONN ROD	13	8	BOLT/M8X30	9	18	COVER/INJECTIONPUMP	5	24	HOLDER/NOZZLE ASSY	24	1
BEARING/CONN ROD/UN	6	5	BOLT/M8X45	11	20	COVER,BEARING	27	6	HOLDER,BRUSH ASSY	27	16
	6	6	BOLT/M8X75	9	16	COVER,CYLINDER HEAD	2	1	HOSE/RABBER	2	6
BEARING/CRANK/LOWER	5	12		17	28	CRANKSHAFT ASSY	15	1	HOSE/RUBBER	17	22
BEARING/CRANK/UPPER	5	11	BOLT/M8X85	9	10	CUP/SEALING/16	9	4	HOUSING/THERMOSTAT	17	24
BEARING/WATER PUMP	17	3	BOLT/WS	16	6	CUTTER,VALVE	11	5	HOUSING,PUMP	25	1
BEARING/WATERPUMP	17	4		18	4	CYLINDERBLOCK ASSY	5	1	HOUSING,STARTER ASSY	26	7
BEARING,BALL	26	4		26	18	CYLINDERHEAD ASSY	1	1	INJECTIONNOZZLE ASSY	19	1
	26	5	BOLT/WSP	22	5	DELIVERYVALVE	25	3	INJECTIONPUMP ASSY	20	1
BEARING,RB/6004	20	12	BOLT,CONN ROD	13	6	DOWEL	5	21	KEY	12	3
BEARING,RB/6005	9	52	BOLT,JOINT	16	13	DRIVE/TACHOMETE ASSY	9	38		15	4
BEARING,RB/6203	20	11	BOLT,SEMS/M10X20	8	3	EYEBOLT	25	52		20	10
BEARING,THRUST CRANK	5	13		10	2	FAN/COOLING	18	1	LEVELGAGE	5	28
	6	2	BOLT,SEMS/M6X12	7	4	FLYWEIGHT	20	15	LEVER/CONTROL COMP	20	34
	6	4		12	5	FLYWHEEL ASSY	15	5	LINK,CONTROL	20	19
BELT/VHM34.5/FAN	18	5		20	14	FRAME	27	12	MANIFOLD(INLET) ASSY	3	1
BODY/OILPUMP	16	2		23	7	FRAME ASSY	27	7	MANIFOLD,EXH	4	1
BODY/WATERPUMP	17	2	BOLT,SEMS/M6X16	9	40	FRAME,STARTER END	26	11	METAL,CRANK SET	5	10
BOLT	3	4	BOLT,SEMS/M8X16	16	11	GASKET	17	8		6	1
	5	2	BOLT,SEMS/M8X25 7T	4	3		23	6		6	3
	5	26	BOLT,SEMS/M8X45	9	15		25	5	NIPPLE	5	22
	9	46		17	13		25	53	NOZZLE	24	16
	11	19	BOSS/SPLINE	15	8		25	55	NUT	9	37
	15	7	BRACKET ROCKER SHAFT	11	13		25	57		11	18
	15	12	BRACKET,ROCKER SHAFT	11	14	GASKET/COVER	5	25		20	38
	15	15	BRUSH	27	17		9	56		26	20
	16	7	BULBE GUIDE	1	6	GASKET/CYLINDERHEAD	1	10		27	2
	17	32	BUSH	27	15	GASKET/HOUSING	17	26		27	23
	22	8	CAMSHAFT/INJPUMP	20	8	GASKET/PLATE	9	45		27	25
	25	54	CAP,BLANK/30	9	41	GASKET/SPACER	17	17	NUT/FLANGE	13	7
	27	9	CAP,OIL FILLER	2	2	GASKET/WATER PUMP	17	12	NUT/M10	22	6
	27	11	CAP,SEALING	1	3	GASKET,EXH.MANIFOLD	4	2		22	9
	27	19		5	3	GASKET,GEAR CASE	9	30	NUT/M8	9	12
	27	20		5	4	GASKET,INLET MANIFOL	3	2		9	21
	27	21		5	7	GASKET,NOZZLE	19	2		9	53
	27	22	CARTRIDGE,OIL FILTER	16	15	GEAR/OILPUMP ASSY	16	3		9	57
	27	24	CASE/ADAPTER	20	24	GEAR,CAMSHAFT	12	2		11	21
BOLT/L=55	9	11	CENTER CRANK PULLEY	15	11	GEAR,CRANK SHAFT	15	3		17	14
BOLT/M10X1.25X82	1	11	CLAMP/WIRE/10-15	17	23	GEAR,IDLE	12	6		17	20
BOLT/M6	9	35	CLAMP,HARNESS	9	17	GEAR,INJ PUMP	20	9		26	22

DESCRIPTION	REF	NO
NUT/NOZZLERETAINING	24	15
NUT,CAP	2	4
NUT,CAP/M 8	9	22
O-RING	9	43
	17	31
	25	7
	25	10
O-RING 1A S50	9	48
O-RING/P 8	20	35
O-RING/P15	16	9
O-RING/P18	7	3
PACKING	2	5
	9	23
	16	14
PAN,OIL COMP	7	1
PIECE,THRUST	20	17
PIN	5	16
	5	17
	5	18
	8	4
	9	8
	9	26
	15	2
	25	9
	25	13
PIN/ADAPTER	20	25
PIN/ARM	9	24
PIN/IDLEGEAR	5	6
PIN/SNAP	9	25
PIN/STRAIGHT	16	5
PIN/TUBE	5	15
	9	49
PIN,CONTROL	20	20
PIN,GROOVE	9	29
PIN,PISTON	13	3
PIN,STARTING SPRING	5	27
PINION,STARTER	26	12
PIPE/FUEL	21	2
PIPE/INJECTION ASSY	19	3
	19	4
	19	5
PIPE/WATER PUMP	17	11
PIPE/WATERDRAIN	5	23
PIPE,OIL	16	12
PIPE,PUMP HOUSING	17	25
PIPE,WATER OUTLET	17	30
PISTON	13	1
PISTON/OV	14	1

DESCRIPTION	REF	NO
PISTON/OV	14	3
PISTON/RELIEF VALVE	9	32
PLATE	25	49
	27	8
PLATE FRONT	9	44
PLATE/ADJUST	22	2
PLATE/REAR	8	1
PLATE/T=1.80	25	18
PLATE/T=1.825	25	33
PLATE/T=1.85	25	19
PLATE/T=1.875	25	34
PLATE/T=1.90	25	20
PLATE/T=1.925	25	35
PLATE/T=1.95	25	21
PLATE/T=1.975	25	36
PLATE/T=2.00	25	22
PLATE/T=2.025	25	37
PLATE/T=2.05	25	23
PLATE/T=2.075	25	38
PLATE/T=2.10	25	24
PLATE/T=2.125	25	39
PLATE/T=2.15	25	25
PLATE/T=2.175	25	40
PLATE/T=2.20	25	26
PLATE/T=2.225	25	41
PLATE/T=2.25	25	27
PLATE/T=2.275	25	42
PLATE/T=2.30	25	28
PLATE/T=2.325	25	43
PLATE/T=2.35	25	29
PLATE/T=2.375	25	44
PLATE/T=2.40	25	30
PLATE/T=2.425	25	45
PLATE/T=2.45	25	31
PLATE/T=2.475	25	46
PLATE/T=2.50	25	32
PLATE/T=2.525	25	47
PLATE/WATER PUMP	17	9
PLATE,THRUST	12	4
PLATE,THRUST INJPUMP	20	13
PLUG	5	5
	9	3
	9	27
	11	12
	25	56
PLUG(HOT) ASSY	1	2
PLUG(M14X15)	7	2
PLUG/PT1/2	1	4

DESCRIPTION	REF	NO
PLUG/PT3/4	5	30
PLUNGER ASSY	25	2
POINTER	8	2
PULLEY	15	10
	27	1
PULLEY ASSY	15	9
PULLEY,WATER PUMP	18	2
PUMP,OIL ASSY	16	1
REGULATOR ASSY	27	26
RELAY,SOLENOID	23	8
RETAINER	26	14
RING(PISTON) SET	13	2
RING(PISTON/OV)SET	14	4
RING(PISTON/OV50)SET	14	2
RING/O	9	39
RING,SNAP	13	4
	25	14
RING,SNAP/ 4 E	20	21
	20	32
RING,SNAP/12 C	9	34
RING,SNAP/16 C	11	16
RINGGEAR	15	6
ROCKERARM	11	9
ROD,CONNECTING	13	5
ROD,CONTROL	25	48
ROD,PUSH	11	7
RORA	26	13
ROTOR ASSY	27	4
ROTOR/OUTER	16	4
ROTOR/WATERPUMP	17	6
SCREW	25	11
	25	50
	26	17
SCREW ADJUST	11	17
SCREW/WATER PUMP	17	10
SCREW/WS	26	19
SEAL SET/WATER PUMP	17	5
SEAL/WATER PUMPPULLE	17	7
SEAL,BEARING CAP	5	8
SEAL,BEARING CAP/7	5	9
SEAL,CYL.HEAD COVER	2	3
SEAL,OIL	1	8
	5	14
	9	9
SEAT,SPRING	24	13
	25	16
	25	17
SEAT,VALVE	1	5

DESCRIPTION	REF	NO
SEAT,VALVE SPRING	11	4
SHAFT/HYDRAULIC ASSY	9	51
SHAFT/ROCKERARM	11	11
SHAFT,CAM	12	1
SHAFT,ROCKER ASSY	11	8
SHAFT,ROCKER ARMASSY	11	10
SHIM/ADAPTER	20	30
	20	31
SHIM/T=0.1	24	2
SHIM/T=0.2	24	3
SHIM/T=0.3	24	4
SHIM/T=0.4	24	5
SHIM/T=0.5	24	6
SHIM/T=0.52	24	7
SHIM/T=0.54	24	8
SHIM/T=0.56	24	9
SHIM/T=0.58	24	10
SHIM/T=0.8	24	11
SHIM,ADAPTER	20	27
	20	28
	20	29
SHIM,INJECTION PUMP	20	2
	20	3
	20	4
	20	5
	20	6
SLEEVE,FRANGE	25	8
SOLENOID	23	5
SPACER	9	47
	24	14
SPACER/FAN/48	18	3
SPACER,OIL FILTER	9	42
SPACER,WATER PUMP	17	16
SPRING	11	15
	26	16
	27	18
SPRING ADAPTER	20	26
SPRING DELIVERY VALV	25	4
SPRING/GOVERNER	20	33
SPRING/RELIEF VALVE	9	33
SPRING,BRUSH	26	10
SPRING,NOZZLE	24	12
SPRING,PLUNGER	25	15
SPRING,RETURN	20	36
SPRING,SETTING	20	22
SPRING,STARTING	20	41
SPRING,VALVE	11	3
STARTER ASSY	22	7

DESCRIPTION	REF . NO		DESCRIPTION	REF . NO	DESCRIPTION	REF . NO	DESCRIPTION	REF . NO
STARTER KIT	26	2						
	26	6						
STOPPER/FULLLOAD	9	20						
STRAINER	16	8						
STUD	5	19						
	5	29						
	8	5						
	9	5						
	9	6						
	9	7						
	9	50						
	17	18						
STUD/M8X40	5	20						
STUD,HEAD COVER	1	12						
SWITCH/OILPRESSURE	23	1						
SWITCH/OVERHEAT	23	2						
SWITCH,STARTER ASSY	26	8						
TAPPET	11	6						
	25	12						
THERMOSTAT	17	29						
VALVE/RELIEF ASSY	9	31						
VALVE,EXHAUST	11	2						
VALVE,INTAKE	11	1						
WASHER	9	13						
	9	54						
	9	58						
	15	14						
	17	15						
	17	21						
	26	21						
WASHER / M6	20	39						
WASHER/08X14X01	9	19						
	9	28						
WASHER/08X15.5X1.6	11	22						
WASHER/9X22X2	22	4						
WASHER,SP/M10	22	10						
WASHER,SP/M6	15	13						
	20	40						
WATERPUMP ASSY	17	1						
YOKE/STARTER	26	1						

DESCRIPTION	REF	NO	DESCRIPTION	REF	NO	DESCRIPTION	REF	NO	DESCRIPTION	REF	NO
ADAPTER(90°/PUMP)	37	17	BAND,WIRE/250	30	8	BEARING,RB/6304	14	8	BOLT/M 8X25	10	3
ADAPTER/HOSE/L/12	30	4		47	26A		14	12	BOLT/M 8X30	29	10
ADAPTER/HOSE/PF1/4	30	1		62	9		15	8	BOLT/M 8X55	45	3
ADAPTER/L/PF1/4 ASSY	38	6		62	14		15	12	BOLT/M 8X60	45	2
	39	6		62	18		19	15	BOLT/M 8X65	4	11
ADAPTER/L/PF3/8 ASSY	13	45		63	9		20	35	BOLT/M 8X80	3	13
	38	10		63	16		25	15	BOLT/M06X08/APSET	4	9
	39	12	BASE/BATTERY COMP	6	14	BEARING,RB/6304NR	21	5	BOLT/M06X32	6	8
ADAPTER/PT3/8	30	15		6	14A		22	5	BOLT/M10X1.25X20	5	10
ADAPTER/1/4.3/8	46	2	BASE/STEERING COMP	36	6	BEARING,RB/6304SS	42	5		36	7
ARM COMP	27	18	BATTERY/38B20L ASSY	6	1	BEARING,RB/6306	33	5	BOLT/M10X20	36	11
	28	18	BEARING	14	14	BODY/HVA1/053	77	1	BOLT/M10X25	43	3
ARM/DANPER COMP	29	12		15	16	BOLT	1	29		44	4
ARM/DIFFLOCK	31	27	BEARING KT253224	19	6		2	3	BOLT/M10X35	11	3
ARM/DIFFROCK COMP	31	28		20	21		6	12		12	3
ARM/KNUCKLE/RH	41	17	BEARING/BALL	13	10		13	48	BOLT/M10X45	32	4
ARM/MID ASSY	26	7		13	37		13	49	BOLT/M10X55	11	10
ARM/MID COMP	26	8		13	38		37	20		12	10
ARM/NEUTRAL COMP	27	11	BEARING/BALL 6305SH2	14	13		40	2	BOLT/M10X90	25	3
	28	11		15	15	BOLT(S) M10X30	11	32	BOLT/M12X20	23	5
ARM/PARIKING/RH COMP	35	30		21	3	BOLT(SP) M8X20	3	12		25	26
ARM/PARKING/LH COMP	35	29		22	3		23	15		60	3
ARM/PTO ASSY	23	12	BEARING/BALL/THRUST	41	12		24	14		61	3
	24	11		41	26		38	21	BOLT/M12X25	8	4
ARM/SHIFT COMP	23	6	BEARING/NEEDLE	13	11		39	21		9	2
ARM/SHIFT/MID COMP	24	5		25	7		52	13		33	9
	25	21	BEARING/THRUST	13	9		52	15		40	5
	25	21A	BEARING,CLUTCH RS	8	18		53	2		52	6
	26	1	BEARING,NR/KT20264	20	11		53	4	BOLT/M12X40	8	5
ARM/SHIFT/SUB COMP	17	5	BEARING,NR/KT303824	19	11		53	11		9	3
AXLE/2WD ASSY	41	1		20	28		54	15	BOLT/M12X50	32	3
BACKPLATE	80	7	BEARING,RB	14	3		58	7	BOLT/M5X16	50	8
BALL	18	4		15	3		59	7	BOLT/M8X25	31	10
	18	7	BEARING,RB/6009	31	12	BOLT(SP)/M6X16	27	23		51	27
	25	13	BEARING,RB/6010	31	13		28	21	BOLT/M8X45/7T	27	2
	47	19	BEARING,RB/6204	19	4		49	12		28	2
	58	2		19	18		49	15	BOLT/M8X80	34	17
	59	2		20	15		57	23	BOLT/S	8	35
	60	2		20	37		57	26		9	17
	61	2	BEARING,RB/6204NR	14	9		60	17		37	19
BAND/CLEANER	3	6		15	9		61	18		54	8
BAND,WIRE/140	47	26	BEARING,RB/6205	19	16	BOLT/ADJUST	35	3	BOLT/SEAL	5	7
	62	8		20	34	BOLT/KNOB	53	6	BOLT/SP	11	15
	62	13		25	16	BOLT/KNOB/M08X31	51	10		11	20
	62	17	BEARING,RB/6205SS	42	6	BOLT/M 6X55	38	3		11	21
	63	8	BEARING,RB/6206	20	16		39	3		11	34
	63	13		31	17	BOLT/M 8X130	62	27		12	15
	63	15	BEARING,RB/6208	33	6		63	24		12	23

DESCRIPTION	REF . NO		DESCRIPTION	REF . NO		DESCRIPTION	REF . NO		DESCRIPTION	REF . NO	
BOLT/SP	12	24	BOLT,SEMS (SP)	47	11	BULB/12V 3W	56	12	CAP,PTO SHAFT	25	28
	12	37		48	4	BULB/12V/45/40W	55	2	CAP,RUBBER (9)	52	3
	25	29		50	10	BULB/12V/5W	55	19	CAP,TIRE VALVE	33	13
	27	21		51	15	BULB/12V21W	55	4		33	16
	54	3		52	9		55	10		42	3
BOLT/STUD	11	9		57	28		55	13	CARTRIDGE/80 ASSY	30	12
	11	11	BOLT,SEMS (S)	5	22	BULB/12V5W	55	5	CASE/PTO/MID	25	1
	11	12		8	32		55	11		25	1A
	11	13		31	35		55	14	CASE/TRANSMISSION/HS	11	1
	11	14		34	16	BUSH	13	12		11	1A
	12	9	BOLT,SEMS (S) M8X16	8	9		13	13		12	1
	12	11		8	13		17	12	CASE/TRANSMISSION/RE	11	2
	12	12		9	7		23	13		11	2A
	12	13		55	22		24	12		12	2
	12	14	BOLT,SEMS/M64X45	47	10		26	9	CASE,DIFF	31	1
BOLT/STUD/SEAL	11	4	BOLT,SEMS/M8X25 7T	11	29		35	25	CASE,OIL FILTER	47	2
	11	8		12	32		35	27	CLAMP/WIRE/10-12	4	15
	12	4	BOLT,SET COMP	47	3	BUSH/15X17X10	27	13	CLAMP/WIRE/10-15	1	25
	12	8	BOOT	59	9		28	13	CLAMP/WIRE/24-32	1	21
	44	2	BOOT/HORN	57	16	BUSH/20X24X30	41	3	CLAMP/WIRE/30-38	1	19
BOLT/WING/SP	1	5	BOOT/STEERING	50	13	BUSH/22X25X15	20	2	CLAMP/WIRE/36-44	1	18
BOLT/8X20	11	24	BOOT/SWITCH	60	15	BUSH/25X29X30	41	2		1	22
	12	27		61	16	BUSH,COLUMN	36	14	CLAMP/WIRE/42-50	3	8
BOLT,BATTERY	6	3	BRACKET COMP	59	11	BUSH,LEVER	6	17	CLAMP/WIRE/47-55	3	10
BOLT,SEMS	1	9		60	4	CABLE/ACCELERATOR	7	9	CLAMP,HARNESS	1	32
	12	35		61	4	CABLE/BATTERY ASSY	6	11		30	9
	17	14	BRACKET/AXLE COMP	40	1	CABLE,EARTH	6	7		35	17
	35	15	BRACKET/CLEANER COMP	3	11	CABLE,METER	56	14		36	9
	53	9	BRACKET/FUSE COMP	50	18	CAM,DIFF-LOCK	31	21		47	27
	53	14		62	25	CAP	1	3		52	11
BOLT,SEMS (SP)	1	13		63	28		36	2		59	16
	1	16	BRACKET/LAMP COMP	49	14		57	7		60	8
	5	2	BRACKET/LAMP/NUMBER	55	21		59	13		61	9
	6	10	BRACKET/LEVER COMP	5	21		61	6		62	10
	6	15	BRACKET/REFLECTOR	55	15	CAP/FUEL ASSY	5	8		63	10
	17	4	BRACKET/SEAT COMP	53	8	CAP/OIL/30	43	8	CLAMP,RADIATOR HOSE	30	6
	23	4		53	13		44	7		38	20
	24	4	BRACKET/SEAT/F COMP	53	10	CAP/PARKING	50	25		39	20
	25	25	BRACKET/TANK COMP	5	9	CAP/WHEEL	42	8	CLEANER/AIR ASSY	3	1
	26	13		5	9A	CAP/35	16	3	CLIP	3	5
	27	15		5	20	CAP,BATTERY	6	2	CLIP(B)	50	17
	28	15	BRAKE/SHOE ASSY	34	1	CAP,BLANK/M10	16	5		51	3
	30	7		34	8	CAP,BLANK/M12	32	11	CLIP/HOSE/11.1-12	4	16
	30	13	BULB	42	4	CAP,BLANK/52	25	20	CLIP/HOSE/8.1-8.7	4	18
	39	10		56	4	CAP,FUSE BOX	62	5	CLUTCH ASSY	8	28
	43	9	BULB/12V 3W	56	6		63	5	CLUTCH/PTO ASSY	20	1
	44	8		56	8	CAP,PTO SHAFT	11	33	CLUTCH,DIFF-LOCK	31	16
	47	7		56	10		12	36	COLLAR 23X34X2	20	6

DESCRIPTION	REF	NO
COLLAR/07X11X11	54	7
COLLAR/10X14X09	54	5
COLLAR/17X21X11 ASSY	27	12
	28	12
COLLAR/21X36X1	25	8
COLLAR/25X35X02	15	13
	16	1
	20	32
COLLAR/25X42X4	41	11
	41	25
COLLAR/25X46X3	19	7
	20	22
COLLAR/26X32X53	42	7
COLLAR/41X55X10	14	1
	15	1
COLLAR,PINION THRUST	31	4
COLLAR,SHIFTER	25	22
COLLAR,THRUST	31	6
CONECTERRING	80	14
CONNECTOR	1	26
CONTROLLER/STEERING	36	10
	36	10A
COOLER/OIL COMP	30	3
COUPLING/37X50X35	20	9
COUPLLER/SHORT/RELAY	59	18
COVER	5	19
	13	15
	13	36
COVER ASSY	3	2
COVER/CHANGE COMP	54	14
COVER/DUSH/F	50	1
COVER/DUSH/R	50	2
COVER/DUSH/REAR COMP	50	3
COVER/FUSE	62	20
	63	18
COVER/HOOD	48	6
COVER/SIDE/LH COMP	51	1
COVER/SIDE/RH COMP	51	2
COVER/TRUNNION	27	22
	28	20
COVER/UNDER/LH COMP	51	8
COVER/UNDER/RH COMP	51	9
COVER,BRAKE	34	3
	34	10
COVER,DUST	37	3
	37	9
	41	39
	41	45

DESCRIPTION	REF	NO
CUP	4	5
CUSHION,B/ RUBBER	29	6
	35	39
CUSHION,RUBBER	3	15
CYLINDER COMP	37	2
CYLINDER/TIEROD ASSY	37	1
DAMPER(OIL) ASSY	29	9
DIODE	62	3
	62	12
	62	16
	63	3
	63	12
DISK/BRAKE	80	11
DISK,CLUTCH/184 COMP	8	29
DISKPLATE	80	6
DRUM/BRAKE	34	6
	34	13
ELBOW	45	6
ELBOW ASSY	38	14
	43	6
	47	28
ELBOW/1/4-PT3/8	30	10
ELBOW/45° ASSY	45	7
ELBOW/90° ASSY	47	30
ELBOW/90°/L ASSY	38	17
	39	17
ELEMENT	4	8
ELEMENT ASSY	3	3
FACING	8	30
FAN/HST COMP	8	25
	8	25A
	9	12
FENDER/LH COMP	52	1
FENDER/RH COMP	52	2
	52	2A
FILTER	47	1
FILTER ASSY	30	11
FILTER COMP	47	1A
FILTER/FUEL ASSY	4	1
FILTER/LINE/12X18X15	77	14
	78	10
	79	10
FLASHER ASSY	57	22
FLOOR/LH COMP	54	1
FLOOR/RH COMP	54	2
FORK/BRAKE COMP	35	9
FORK/RELEASE	8	19
FORK/SHIFT/DIFFLOCK	31	19

DESCRIPTION	REF	NO
FORK/SHIFT/PTO	18	5
FORK/SHIFT/SUB	18	2
FUNNEL,PL ASSY	76	9
FUSE/SLOWBLOW	62	2
	63	2
FUSE/32V10A	62	22
	63	20
FUSE/32V20A	62	23
	63	21
FUSE,BLADE	62	6
	62	24
	63	6
	63	22
GASKET	2	2
	13	29
	43	2
	44	3
	47	13
	47	14
GAUGE/FUEL ASSY	5	5
GEAR/SPUR/13	19	1
	20	36
GEAR/SPUR/15	25	11
GEAR/SPUR/17	14	5
	15	5
GEAR/SPUR/18	20	10
GEAR/SPUR/18-25-35	19	5
GEAR/SPUR/19	14	2
	15	2
	19	17
	21	4
GEAR/SPUR/19-29	14	6
	14	11
	15	6
	15	11
GEAR/SPUR/24-30	19	10
GEAR/SPUR/25	22	4
GEAR/SPUR/30	20	25
GEAR/SPUR/31-20	20	20
GEAR/SPUR/32	19	9
GEAR/SPUR/33	20	5
GEAR/SPUR/34	25	6
GEAR,DIFF-SIDE/14T	31	5
GEAR,WHEEL/58	33	2
GLIP/YELLOW	23	17
	24	16
GREECENIPPLE	29	3
GRILLE	49	1

DESCRIPTION	REF	NO
GRIP	52	16
GRIP/SUB	26	15
GRIP/THROTTLE	7	2
GROMMET	54	4
	54	6
GROMMET/25X70X03	9	10
GROMMET/9X13X2	59	17
	60	5
GUIDE ASSY	13	31
GUIDE/CHANGE	23	14
	24	13
GUIDE/LEVER/LH COMP	53	1
GUIDE/LEVER/RH COMP	53	3
HARNESS/ENGINE/E4	62	1
	63	1
HARNESS/FUSE ASSY	62	19
	63	17
HARNESS/LAMP	55	20
HARNESS/MAIN/E4 ASSY	62	11
	63	11
HARNESS/PA/BLUE	77	3
HARNESS/PANEL/E ASSY	62	30
	63	27
HARNESS/REAR/E4 ASSY	63	14
HARNESS/REAR/SV ASSY	62	15A
HARNESS/REAR/VALVE	62	15
HARNESS/STARTER	57	11
HARNESS,OIL PRESSURE	62	7
	63	7
HOLDER	7	12
HOLDER/FENDER/LH	52	4
HOLDER/FENDER/RH	52	5
HOLDER/SHAFT/LH ASSY	35	24
HOLDER/SHAFT/RH ASSY	35	26
HOLDER/SLEEVE COMP	8	12
HOLDER,PINION SHAFT	31	7
HOOD COMP	48	1
HOOD/LAMP	49	3
HORN ASSY	57	27
HOSE	1	4
HOSE/CLEANER/OUTLET	3	9
HOSE/DERIVERY ASSY	38	19
	39	19
HOSE/RADIATOR/INLET	1	17
HOSE/RADIATOR/OUTLET	1	20
HOSE/06X10X350	4	13
HOSE/1350 ASSY	30	2
	30	5

DESCRIPTION	REF . NO		DESCRIPTION	REF . NO		DESCRIPTION	REF . NO		DESCRIPTION	REF . NO	
HOSE/1350 ASSY	45	5	KEY,ROTARY TOP SHAFT	41	18	LABEL/D/BATTERY	71	11	LABEL/SPEED/HST	67	6
	47	25	KNOB	31	34	LABEL/D/BATTERY/A	72	10	LABEL/START/A	72	15
HOSE/1450 ASSY	47	25A		57	15	LABEL/D/BATTERY/H	74	10	LABEL/START/D	70	15
HOSE/210	1	24		60	11	LABEL/D/BATTERY/T	73	10	LABEL/START/F	69	15
HOSE/250	1	23		61	12	LABEL/D/BATTERY/V	75	10	LABEL/START/H	74	15
HOSE/350	4	14	KNOB,LEVER/12	17	15	LABEL/D/STARTER	68	9	LABEL/START/P	71	15
HOSE/650	4	17	LABEL/C/BATTERY	68	3		69	9	LABEL/START/T	73	15
HOUSING/AXLE/REAR/LH	32	1		69	3		70	9	LABEL/START/U	68	14
HOUSING/AXLE/REAR/RH	32	2		70	3		71	9	LABEL/START/V	75	15
HOUSING/CLUTCH COMP	8	1		71	3	LABEL/D/STARTER/A	72	9	LABEL/SWITCH/P	65	8
	9	1	LABEL/C/BATTERY/A	72	3	LABEL/D/STARTER/H	74	9		66	8
HST ASSY	13	1	LABEL/C/BATTERY/H	74	3	LABEL/D/STARTER/T	73	9		67	8
HUB/CLUTCH	20	27	LABEL/C/BATTERY/T	73	3	LABEL/D/STARTER/V	75	9	LABEL/SWITCH/PTO	66	13
HUB/KUCKLE	41	31	LABEL/C/BATTERY/V	75	3	LABEL/DIFF	65	3		67	13
HUB/PTO/HST	19	2	LABEL/C/DRIVE/A	72	1		66	3	LABEL/W/ETHER	68	6
	19	2A	LABEL/C/DRIVE/D	70	1		67	3		69	6
HUB/09X14X20	1	30	LABEL/C/DRIVE/F	69	1	LABEL/FUEL/A	72	11		70	7
INSULATOR	1	8	LABEL/C/DRIVE/G	68	1	LABEL/FUEL/H	74	11		71	7
	1	10	LABEL/C/DRIVE/H	74	1	LABEL/FUEL/P	71	10	LABEL/W/ETHER/A	72	6
	1	11	LABEL/C/DRIVE/P	71	1	LABEL/FUEL/T	73	11	LABEL/W/ETHER/H	74	6
	1	12	LABEL/C/DRIVE/T	73	1	LABEL/FUEL/V	75	11	LABEL/W/ETHER/T	73	6
	5	16	LABEL/C/DRIVE/V	75	1	LABEL/FUSE	65	12	LABEL/W/ETHER/V	75	6
	5	17	LABEL/C/SHIFT	69	12		66	12	LABEL/W/FAN	68	2
	6	16		70	12		67	12		69	2
	48	2		71	12	LABEL/FUSE/MAIN	62	21		70	2
	50	14	LABEL/C/SHIFT/A	72	12		63	19		71	2
	50	15	LABEL/C/SHIFT/H	74	12	LABEL/FUSE/11	68	12	LABEL/W/FAN/A	72	2
	51	18	LABEL/C/SHIFT/T	73	12		69	13	LABEL/W/FAN/H	74	2
	51	19	LABEL/C/SHIFT/V	75	12		70	13	LABEL/W/FAN/T	73	2
INSULATOR/LEVER/SUB	26	14	LABEL/CE	64	7		71	13	LABEL/W/FAN/V	75	2
INSULATOR/LH	51	23	LABEL/COLUMN/LH	65	9	LABEL/FUSE/11/A	72	13	LABEL/W/MUFFLER	68	5
INSULATOR/RH	51	21		66	9	LABEL/FUSE/11/H	74	13		69	5
	51	22		67	9	LABEL/FUSE/11/T	73	13		70	5
INSULATOR/TANK	5	18	LABEL/COLUMN/RH	65	10	LABEL/FUSE/11/V	75	13		71	5
INSULATOR/15X20X420	1	6		66	10	LABEL/FUSE/4	71	14	LABEL/W/MUFFLER/A	72	5
INSULATOR/20X40X36	48	3		67	10	LABEL/FUSE/4/A	72	14	LABEL/W/MUFFLER/H	74	5
INSULATOR/30X30X80	51	24	LABEL/CONTROL/PARKIN	65	4	LABEL/FUSE/4/H	74	14	LABEL/W/MUFFLER/T	73	5
INSULATOR/36	5	15		66	4	LABEL/FUSE/4/T	73	14	LABEL/W/MUFFLER/V	75	5
INSULATOR/565	51	17		67	4	LABEL/FUSE/4/V	75	14	LABEL/W/RADIATOR	68	7
INSULATOR/575	49	2	LABEL/CONTROL/PTO	65	2	LABEL/KNOB/OPEN	65	11		69	8
INSULATOR/75	5	14		66	2		66	11		70	8
JOINT BALL M08LH	27	7		67	2		67	11		71	8
	28	7	LABEL/CONTROL/SUB	65	1	LABEL/PQB	46	13	LABEL/W/RADIATOR/A	72	8
JOINT BALL M08RH	27	6		66	1	LABEL/PTO/MID	65	5	LABEL/W/RADIATOR/H	74	8
	28	6		67	1		66	5	LABEL/W/RADIATOR/T	73	8
JOINT/BALL/LH ASSY	41	37	LABEL/D/BATTERY	68	10		67	5	LABEL/W/RADIATOR/V	75	8
JOINT/BALL/RH ASSY	41	43		69	10	LABEL/SPEED/HST	65	6	LABEL/W/ROPS/A	72	16
KEY ASSY	57	10		70	11		66	6	LABEL/W/ROPS/E20	70	16

DESCRIPTION	REF	NO	DESCRIPTION	REF	NO	DESCRIPTION	REF	NO	DESCRIPTION	REF	NO
LABEL/W/ROPS/E30	68	15	MARK,FUSE/4	68	13	NUT	59	15	NUT/M8	27	8
LABEL/W/ROPS/E40P	71	16		69	14		60	7		28	8
LABEL/W/ROPS/E50	69	16		70	14		60	10		35	12
LABEL/W/ROPS/H	74	16	METAL	46	1		60	14		47	24
LABEL/W/ROPS/T	73	16		46	1A		61	8	NUT/SPRING	50	7
LABEL/W/ROPS/V	75	16	METAL/HST	11	18		61	11	NUT/WASHER	29	11
LABEL/W/SHIELD	68	4		11	18A		61	15		38	22
	69	4		12	18		77	17		39	22
	70	4	METAL/PTO	11	30	NUT/LH THREAD	41	42		51	16
	71	4		11	30A	NUT/M 6	6	6		52	10
LABEL/W/SHIELD/A	72	4		12	33		54	11		55	8
LABEL/W/SHIELD/H	74	4	METAL/SLIDE	13	14	NUT/M 8	10	4		55	23
LABEL/W/SHIELD/PTO	68	8	METAL/U	38	1		10	11	NUT,CASTTLE/M12X1.25	41	7
	69	7		39	1		27	10	NUT,LOCK/M8	5	3
	70	6	METAL,DIFF-CASE LH	11	25		28	10		49	13
	71	6		12	28		29	7		51	30
LABEL/W/SHIELD/PTO/A	72	7	METAL,DIFF-CASE RH	11	26		34	18	NUT,RING	4	6
LABEL/W/SHIELD/PTO/H	74	7		12	29		35	4	NUT,RING/M28X1.0	57	8
LABEL/W/SHIELD/PTO/T	73	7	METER/HOUR ASSY	56	2		35	13	NUT,SLOTTED	37	4
LABEL/W/SHIELD/PTO/V	75	7	MIRROR ASSY	51	28		35	23		37	10
LABEL/W/SHIELD/T	73	4	MOLDING/GRILLE/LH	49	4		35	35	NUT,SPEED/P6	48	8
LABEL/W/SHIELD/V	75	4	MOLDING/GRILLE/RH	49	5		35	40		49	8
LABEL,FUEL/D	70	10	MOLDING/METER	65	7		46	18		50	6
LAMP/COMBI/REAR/LH	55	9		66	7		47	23	O-RING/G45	8	22
LAMP/COMBI/REAR/RH	55	12		67	7	NUT/M06	6	9	O-RING/P 5	12	21
LAMP/FRONT SET	55	3	MONITOR ASSY	56	3	NUT/M10	8	33		46	16
LAMP/HAZARD ASSY	56	7	MUFFLER ASSY	2	1		9	15	O-RING/P 7	12	20
LAMP/HEAD ASSY	55	1	NET/GRILLE	49	6		43	5		46	14
LAMP/LIGHT ASSY	56	9	NET/WIRE COMP	1	2		44	6		77	21
LAMP/NUMBERPLAT SET	55	18	NIPPLE/GREASE	8	2	NUT/M10 7T P=1.25	5	11	O-RING/P10A	4	3
LAMP/TRAILER ASSY	56	11	NIPPLE,GREASE	41	4		8	10		31	24
LAMP,WINKER ASSY	56	5		41	38		9	8	O-RING/P12	77	16
LEVEL GAUGE	17	18		41	44	NUT/M10X1.25	41	40	O-RING/P14	13	27
LEVER	57	14	NIPPLE,GREASE/PT1/4	37	5		41	46		13	46
LEVER COMP	7	1		37	11	NUT/M12	8	6		13	47
	49	19	NIPPLE,GREASE/PT1/8	29	5		9	4		17	2
LEVER/DIFFLOCK COMP	31	33		35	2		31	37		23	2
LEVER/PARKING COMP	35	14		41	9		32	9		24	2
LEVER/PTO COMP	23	16	NUT	6	13		41	21		25	23
	24	15		7	6		41	33		38	11
LEVER/SUB	17	13		11	7		41	48		38	15
LEVER/SUB ASSY	17	11		12	7	NUT/M12X1.25	41	15		39	13
LEVER/SUB COMP	26	12		31	26		41	29		43	7
LINING/11X40X03	7	3		32	8	NUT/M20	59	10		47	29
LINK,FUSIBLE	62	4		36	3	NUT/M22	57	13		77	10
	63	4		52	18	NUT/M6	51	7		78	6
MARK,FUEL	68	11		55	17		54	10		79	6
MARK,FUEL/FR	69	11		57	21	NUT/M6X15	50	21	O-RING/P18	13	43

DESCRIPTION	REF	NO	DESCRIPTION	REF	NO	DESCRIPTION	REF	NO	DESCRIPTION	REF	NO
O-RING/P18	34	5	PIN	35	38	PIN,SPRING/8 X28 W	35	31	PLATE/VALVE	13	3
	34	12		37	22	PIN,TAPER/8X50	29	2		13	4
	77	11	PIN COMP	49	11	PIN,YOKE A	35	6	PLATE/Z/19X326	26	4
	78	7	PIN/BRAKE CAM/L COMP	34	4		35	21	PLATE/Z/53X134	58	3
	79	7	PIN/BRAKE CAM/R COMP	34	11	PINION/BEVEL SET	14	10		59	3
O-RING/P20	36	15	PIN/PIVOT COMP	41	5	PINION/BEVEL/07 SET	15	10	PLIERS/G150	76	3
	38	2	PIN/SHIFT COMP	17	1	PINION,DIFF/12T	31	3	PLUG	1	27
	38	13		23	1	PINION,WHEEL/11.L	31	14		13	21
	39	2		24	1	PINION,WHEEL/11.R	31	15		13	22
	39	15	PIN/SLITTED	31	22	PIPE/B2 COMP	30	14		77	9
	47	9	PIN/06X31	23	19	PIPE/CLEANER/INLET	3	7		78	5
	77	12		24	18	PIPE/RELIEF COMP	38	16		79	5
	78	8	PIN/12X75	8	20		39	16	PLUG/BOA	13	8
	79	8	PIN/20X51	25	5	PIPE/SUCTION COMP	47	8	PLUG/SCREW/SEAL	25	27
O-RING/P21	47	5	PIN,KNOCK	11	23	PIPE/U COMP	38	8		77	22
O-RING/P28	47	6		12	26	PIPE/VALVE/F CONP	39	8		77	23
O-RING/P36	36	16	PIN,SPLIT/2 X15	51	13	PIPE/VALVE/R COMP	39	9	PLUG/SEAL/25	16	4
O-RING/P44	4	7	PIN,SPLIT/2 X20	10	8	PIPE/123	33	3	PLUG,DRAIN	8	3
ORNAMENT/G18/LH	64	1		31	32	PISTON	80	1		11	16
ORNAMENT/G18/RH	64	2		35	8	PIVOT/TRUNNION COMP	27	1		12	16
ORNAMENT/HYDRO	64	6		35	20		28	1		12	19
ORNAMENT/ISEKI	64	4		35	37	PLATE COMP	27	20		38	5
ORNAMENT/ISEKI/SYMBO	64	3		36	4	PLATE/BATTERY	6	4		39	5
ORNAMENT/STEERING	64	5		49	21	PLATE/BUMPER	40	4	PLUG,DRAIN (1/4)	32	10
PACKING	1	28	PIN,SPLIT/2 X25	37	16	PLATE/CASE/REAR COMP	43	1		46	3
	4	10	PIN,SPLIT/2.5X15	7	11		43	1A	POPPET	13	20
PACKING/COVER BRAKE	34	15	PIN,SPLIT/2.5X20	23	20	PLATE/CASE/V COMP	44	1		77	20
PACKING/PISTON	37	12		24	19	PLATE/COVER	11	22	PRESSURE/BRAKE	80	12
PACKING/RUBBER	5	6	PIN,SPLIT/2.5X25	7	7		12	25	PUMP/GEAR ASSY	47	12
PACKING,OIL PUMP	47	20		41	41	PLATE/GRILLE COMP	49	10	RADIATOR ASSY	1	1
PAD	29	8		41	47	PLATE/I/19X254	23	9	REFLECTOR	55	16
PAD/120	5	4	PIN,SPLIT/3 X15	10	14	PLATE/I/19X273	24	8	RELAY/4P	57	24
PANEL/METER	56	1	PIN,SPLIT/3 X20	8	21	PLATE/I/19X288	17	8	RELAY,5P ASSY	60	16
PEDAL/BRAKE COMP	35	1		17	10	PLATE/I/30X50	17	3		61	17
PEDAL/CLUTCH COMP	10	1		23	11		23	3	RIM,WHEEL FRONT	42	2
PEDAL/HST/F COMP	29	4		24	10		24	3	RING/O	13	28
PEDAL/HST/R SET	29	1		26	6		25	24		13	44
	29	1A	PIN,SPLIT/3 X25	41	8	PLATE/I/32X63	29	14		37	15
PIN	11	19		41	16	PLATE/I,13X40	58	5		38	7
	12	22		41	30		59	5		38	18
	12	34	PIN,SPRING/5 X28 W	35	32	PLATE/L/50X117 COMP	55	7		39	7
	13	30	PIN,SPRING/6 X25 W	17	6	PLATE/LH COMP	1	14		39	18
	13	32		23	7	PLATE/LOCK COMP	49	16		45	8
	25	2		24	6	PLATE/RH COMP	1	15		46	12
	29	13		26	2	PLATE/SPRING	46	8		47	31
	31	8	PIN,SPRING/6 X32 W	8	26		77	18		77	13
	31	9		9	13	PLATE/STOPPER	53	7		78	9
	32	7	PIN,SPRING/6 X40 W	25	9	PLATE/SWASH	13	2		79	9

DESCRIPTION	REF	NO	DESCRIPTION	REF	NO	DESCRIPTION	REF	NO	DESCRIPTION	REF	NO
RING/SNAP	8	17	ROD/BRAKE COMP	35	11	SEAL,OIL/TC35558	21	8	SPOOL/FLOCON/1.8	78	1
	20	19	ROD/CLUTCH/B	10	12		22	8	SPOOL/FLOCON/2.2	79	1
	33	8	ROD/M08X110 COMP	27	4	SEALRING/32	80	3	SPOOL/STOPPER	77	8
RING/22	20	4		28	4	SEALRING/77	80	2		78	4
RING/30	20	14	ROD/PISTON ASSY	37	8	SEPARATERPLATE	80	5		79	4
RING,SNAP/15 C	27	16	ROD/TIE	41	36	SHAFT/DRIVE/PTO	19	8	SPRING	13	16
	27	19		41	36A		20	26		13	17
	28	16	ROD/130	31	29	SHAFT/INPUT	8	24		35	10
	28	19	ROD/65	27	5		9	11		48	10
RING,SNAP/17 C	13	40		28	5	SHAFT/M	13	6		51	14
RING,SNAP/18 C	17	17	ROD/80	35	18	SHAFT/P	13	5		80	4
	26	11	ROD,CLUTCH (A)	10	9	SHAFT/PARKING	35	28	SPRING/GUIDE	77	6
RING,SNAP/20C	13	23	RUBBER,CUSHION (A)	53	12	SHAFT/PTO	21	1		78	2
	14	7	SCREW	13	41		22	1		79	2
	15	7		56	13	SHAFT/PTO COMP	20	3	SPRING/HC012	46	6
	20	13		62	26	SHAFT/PTO/MID	25	10	SPRING/HC012/2	46	7
	21	7		63	23	SHAFT/STEERING/ COMP	36	13	SPRING/HC020	77	19
	22	7	SCREW/F	77	15	SHAFT/SUB	14	4	SPRING/HC022	18	3
RING,SNAP/22 C	10	2	SCREW/M6X12	50	24		15	4		18	6
	34	7	SCREW/SOCKET	13	34	SHAFT/TRUNNION	13	7	SPRING/HC024	23	18
	34	14		46	15	SHAFT/WHEEL	33	1		24	17
RING,SNAP/25	14	15		47	15	SHAFT,DIFF. PINION	31	2	SPRING/HC027	77	7
	15	17	SCREW/SP	50	12	SHIM,A/0.5	41	22		78	3
RING,SNAP/25 C	15	14		50	20		41	34		79	3
	16	2		52	17	SHIM,A/1.0	41	23	SPRING/HC094	10	5
	19	19		58	6		41	35	SPRING/HC64	8	15
	20	24		59	6	SHIM,DIFF-CASE A	11	27	SPRING/HE067	27	17
	20	33		59	14		12	30		28	17
	20	38		60	6	SHIM,DIFF-CASE B	11	28	SPRING,PRESS/22	7	4
	25	14		61	7		12	31	SPRING,PRESS/40	31	23
	34	20	SCREW,PLUS/M4X8	57	4	SHROUD	1	7	SPRING,SHIFTER	25	12
RING,SNAP/28 C	47	18	SCREW,PLUS/M5X0.8X8	57	6	SLEEVE	8	14	SPRING,TENSION	34	2
RING,SNAP/30 C	13	25	SCREWDRIVER ASSY	76	4		21	2		34	9
	19	14	SEAL/DUST	37	7		22	2	SPRING,TENSION/121	31	30
	20	8		37	14		25	18	SPRING,TENSION/53	49	17
	20	18	SEAL/OIL	13	26	SNAPRING	80	8	SPRING,VALVE	4	2
	20	31		13	35	SNAPRING/32	80	10	STAY/COVER/LH COMP	51	25
	33	7		13	39	SNAPRING/85	80	13	STAY/COVER/RH COMP	51	26
RING,SNAP/47 C	13	24		41	13	SOLENOID SET	46	10	STAY/CYLINDER	37	18
RING,SNAP/52 C	25	17		41	27	SPACER	47	4	STAY/FENDER COMP	52	12
RIVET	8	31	SEAL/RING	11	31	SPANNER/ 8X10	76	5	STAY/FLOOR/LH COMP	54	13
	48	7	SEAL/ROD	37	6	SPANNER/12X14	76	6	STAY/INSULATOR	50	16
RIVET,BLIND	48	11		37	13	SPANNER/13X17	76	7	STAY/MIRROR COMP	51	29
	51	6	SEAL,OIL	47	17	SPANNER/19X22	76	8	STAY/PLATE COMP	52	14
ROD	10	6	SEAL,OIL/QLF488011.5	33	4	SPANNER,BOX/22	76	1	STAY/RELAY COMP	57	25
	46	11	SEAL,OIL/TC20357	8	23	SPINDLE/LH COMP	41	24	STAY/SHIFT/HST	18	1
	49	18	SEAL,OIL/TC30458	31	18	SPINDLE/RH COMP	41	10	STAY,SHIFTER	31	20
ROD COMP	35	34	SEAL,OIL/TC35528	25	19	SPOOL/FLOCON/1.15	77	5	STEY/FLOOR/RH COMP	54	12

DESCRIPTION	REF	NO	DESCRIPTION	REF	NO	DESCRIPTION	REF	NO	DESCRIPTION	REF	NO
STOPPER COMP	53	5	WASHER	13	42	WASHER,LOCK/M12	41	32	WASHER,SP/M10	13	50
STOPPER/PARKING	35	16		27	14	WASHER,PL/M 5	55	6		25	4
STUD/M12X35	31	36		28	14		57	5		31	25
SWITCH	57	17		47	16	WASHER,PL/M 8	1	31		32	6
SWITCH ASSY	57	12		51	5		10	13		36	8
SWITCH/LIMIT ASSY	58	4		57	9		17	9		36	12
	59	4		60	12		23	10		37	21
SWITCH/PTO ASSY	60	9		60	13		24	9		40	3
	61	10		61	13		26	5		41	49
SWITCH/PUSH ASSY	59	8		61	14		31	31		43	4
SWITCH,HAZARD ASSY	57	19		80	9		35	7		44	5
SWITCH,LAMP ASSY	57	18	WASHER / M6	6	5		35	19	WASHER,SP/M12	8	8
SWITCH,STARTER ASSY	57	1		7	10		35	36		9	6
SWITCH,STARTER SET	57	2		10	7		47	21		32	5
SWITCH,STOP	57	20		46	9		49	20		33	10
	58	1		50	9		51	4		40	6
	59	1		50	23		51	12		52	7
	60	1	WASHER /M12	8	7		62	29	WASHER,WIRE TENSION	54	9
	61	1		9	5		63	26	WHEEL/STEERING ASSY	36	1
SWITCH,TOGGLE	59	12		51	11	WASHER,PL/M4	57	3	WHEEL/15X10LB COMP	33	11
	61	5		52	8	WASHER,PULLEY	41	14		33	14
TANK/FUEL COMP	5	1	WASHER/M10	5	13		41	28	WIRE	8	27
TIRE/TURF/PD	42	1		7	5	WASHER,SEAL/16	11	17		9	14
TIRE,TURF29X12.00X15	33	12		8	36		12	17		17	7
	33	15		9	18	WASHER,SP/M 6	38	4		23	8
TRIM/20	51	20		11	5		39	4		24	7
TRIM/350	50	19		12	5		50	22		26	3
TRIM/420	49	9		13	51	WASHER,SP/M 8	3	14		35	33
TRIM/490	50	4		36	5		4	12	WRENCH,SOCKET/17X19	76	2
TRIM/570	50	5	WASHER/13X32X3	41	6		27	3	YOKE COMP	35	22
TRIM/70	48	5	WASHER/13X35X5	41	20		27	9	YOKE,LH	35	5
TUBE/035	10	15	WASHER/18X26X02	17	16		28	3			
TURNBUCKLE	10	10		26	10		28	9			
VALVE	3	4	WASHER/20X28X2	21	6		31	11			
VALVE ASSY	45	1		22	6		34	19			
VALVE SET	46	5	WASHER/21X38X02	20	12		45	4			
VALVE/FLOCON ASSY	38	9	WASHER/24X9X3.2	50	11		46	17			
	39	11	WASHER/25X42X2	20	23		47	22			
	77	4	WASHER/30X40X2	19	13		62	28			
VALVE/S/A	13	18		20	7		63	25			
	13	19		20	17	WASHER,SP/M10	2	4			
	13	33		20	30		5	12			
VALVE/SOLENOID ASSY	46	4	WASHER/30X46X2	19	12		8	11			
VALVE/SOLENOID/NC SE	77	2		20	29		8	34			
VALVE, RELIEF ASSY	38	12	WASHER/46X70X2	8	16		9	9			
	39	14	WASHER/6X14X2	48	9		9	16			
VIS	4	4	WASHER/6X14X3	49	7		11	6			
WASHER	7	8	WASHER,LOCK/M12	41	19		12	6			