EFG 216kn

04.09-

GB

Operating Instructions

51159405

04.09

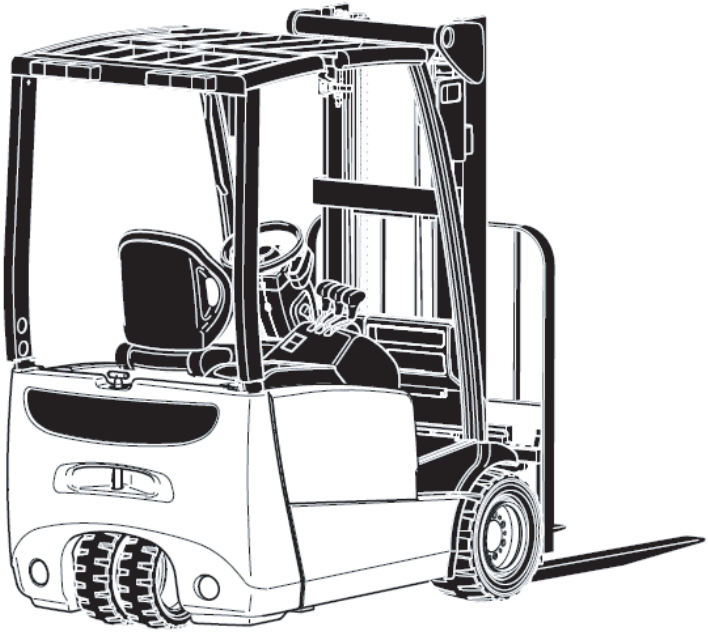

JUNGHEINRICH

Machines. Ideas. Solutions.

Table of contents

A Correct Use and Application

B Truck Description

C Transport and Commissioning

D Battery - Servicing, Recharging, Replacement

E Operation

F Industrial Truck Maintenance

Appendix

JH Traction Battery Operating Instructions

➔ These operating instructions apply only to Jungheinrich battery models. If using another brand, refer to the manufacturer's operating instructions.

A Correct Use and Application

The “Guidelines for the Correct Use and Application of Industrial Trucks” (VDMA) are supplied with the truck. The guidelines form part of these operating instructions and must be observed. National regulations apply in full.

The truck described in the present operating instructions is an industrial truck designed for lifting and transporting loads.
It must be used, operated and serviced in accordance with the present instructions. All other types of use lie beyond the scope of application and can result in damage to personnel, the truck or property. In particular, avoid overloading the truck with loads which are too heavy or placed on one side. The data plate attached to the truck and the load diagram are binding with regard to the maximum load capacity. The owner must ensure that any damaged and/or illegible load diagrams are replaced. The industrial truck must not be used in fire or explosion endangered areas, or areas threatened by corrosion or excessive dust.

Proprietor responsibilities: For the purposes of the present operator manual the “proprietor” is defined as any natural or legal person who either uses the industrial truck himself, or on whose behalf it is used. In special cases (e.g. leasing or renting) the proprietor is considered the person who, in accordance with existing contractual agreements between the owner and user of the industrial truck, is charged with operational duties.
The proprietor must ensure that the truck is only used for the purpose it is designed for and that any danger to life and limb of the user and third parties is avoided. Furthermore, accident prevention regulations, safety regulations and operating, servicing and repair guidelines must be followed. The proprietor must ensure that all truck users have read and understood this operator manual.

Failure to comply with the operating instructions shall invalidate the warranty. The same applies if improper work is carried out on the truck by the customer or third parties without the permission of the manufacturer’s customer service department.

Attaching accessories: The mounting or installation of additional equipment which affects or enhances the performance of the industrial truck requires the written permission of the manufacturer. In some cases, local authority approval shall be required.
Approval of the local authorities however does not constitute the manufacturer’s approval.

Trailing and towed loads: The truck may only be used for trailing or towed loads for which the truck has been approved.

B Truck Description

1 Application

The EFG is a three-wheel electric sit-down counterbalanced truck. It is cantilevered and the load handler mounted on the front of the truck can unload lorries without hindrance and deposit the load on ramps or in racks. Closed bottom pallets can also be lifted.

Truck models and maximum capacity:

Type	Max. capacity *)	Load centre of gravity
EFG 216kn	1,600 kg	500 mm

*) The load charts attached to the truck are binding in terms of capacity

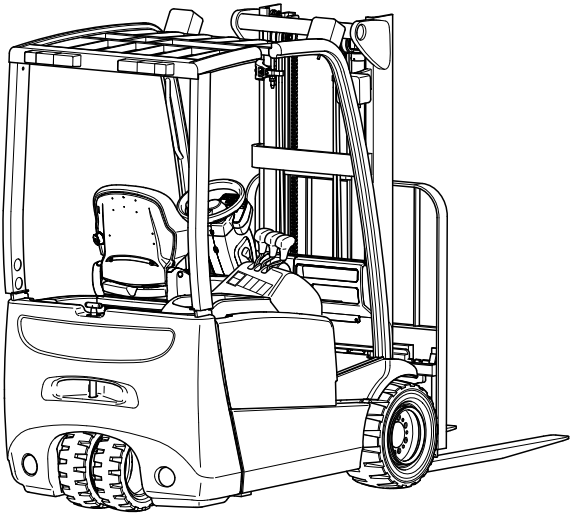

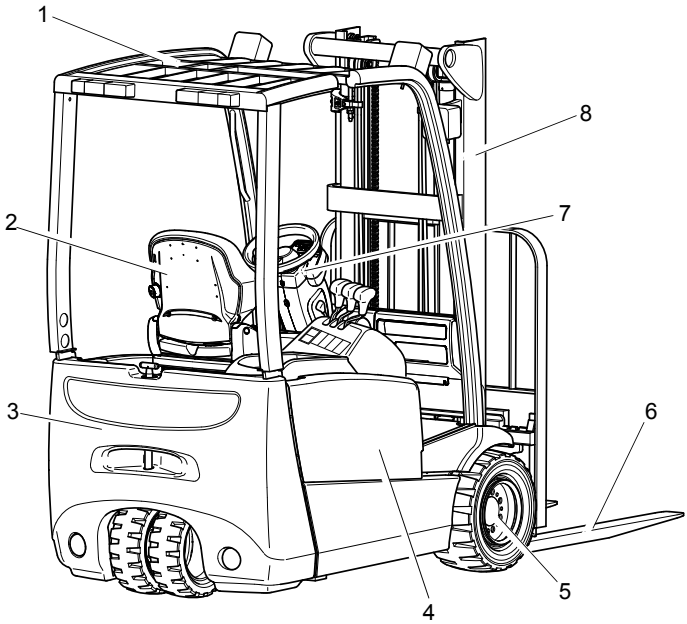

Item		Description
1	●	Overhead guard
2	●	Driver's seat
3	●	Counterweight
4	●	Battery behind panel
5	●	Power
6	●	Load handler
7	●	Steering system
8	●	Mast

2.1 Truck

Steering (7): A low steer effort of 15 N as well as a favourable transmission ratio of 5 steering wheel revolutions ensure fast and comfortable steering. The hydraulic rack and pinion steering keeps wear parts down to a minimum, bringing the advantage of a compact steer unit. The standard twin tyres reduce the steer effort and increase the useful life of the wheels.

Driver's seat (2): The driver's seat is the centre point of any lift truck. Our trucks are particularly strong in this respect. They feature a comfort seat with an adjustable steering column as well as storage facilities for papers or the driver's personal belongings.

Electrical/Electronic System: The latest AC threephase system using a CAN Bus system to minimise the number of cable leads. This results in less downtime due to cable breakage and considerably faster troubleshooting. The advanced controller is simple, safe and flexible. The driver can choose from five travel programs, depending on the load and the environment: from maximum performance to energy saving. Error analysis and programming can be performed simply and above all rapidly by PC.

Drive System and Brakes: The 2-motor front drive provides maximum traction to the drive wheels at all times. Each motor receives the exact power it requires in proportion to the steering angle. The wheels do not spin and there is no loss of energy.
The hydraulic oil bath multi-plate brakes form the operating brake and are practically maintenance-free. The gear encapsulation allows the truck to be used even in hostile environments. The truck also brakes to a halt regeneratively via the traction motors. This minimizes energy consumption. Even on ramps the truck will not simply roll away.

Hydraulic System: All operations can be performed sensitively, proportionally and simultaneously (insofar as they do not affect safety). To ensure greater efficiency, a hydraulic unit and steering booster motor operate independently of each other. The micro pressure filter can be replaced from the top (without spilling hydraulic oil).

Mast (8): The aim is to optimise visibility. The cold rolled maximum strength steel sections are extremely narrow, allowing for good fork visibility in particular with the three-stage mast. The same standard has been achieved for the fork carriage.
The lift rails and the fork carriage run on permanently-lubricated and hence maintenance-free angled rollers.

3 Standard Version Specifications

3.1 Dimensions

	Description	EFG 216kn	
h_1	Mast height retracted	2000	mm
h_2	Free lift	150	mm
h_3	Lift	3000	mm
h_4	Mast height extended	4220	mm
h_6	Overhead guard height	1960	mm
h_7	Seat height	890	mm
h_{10}	Hitch height	560	mm
L_1	Length including forks	3049	mm
L_2	Headlength [1)]	1899	mm
b1	Overall width	1060	mm
e	Fork width	100	mm
m_1	Ground clearance with load below mast	80	mm
m_2	Centre wheel base ground clearance	90	mm
Ast	Working aisle width for pallets 800 x 1200 longit.	3348	mm
Ast	Working aisle width for pallets 1000 x 1200 traverse	3224	mm
W_a	Turning radius	1545	mm
x	Load distance [1)]	352	mm
y	Wheelbase	1357	mm

[1)] = +25 mm DZ mast

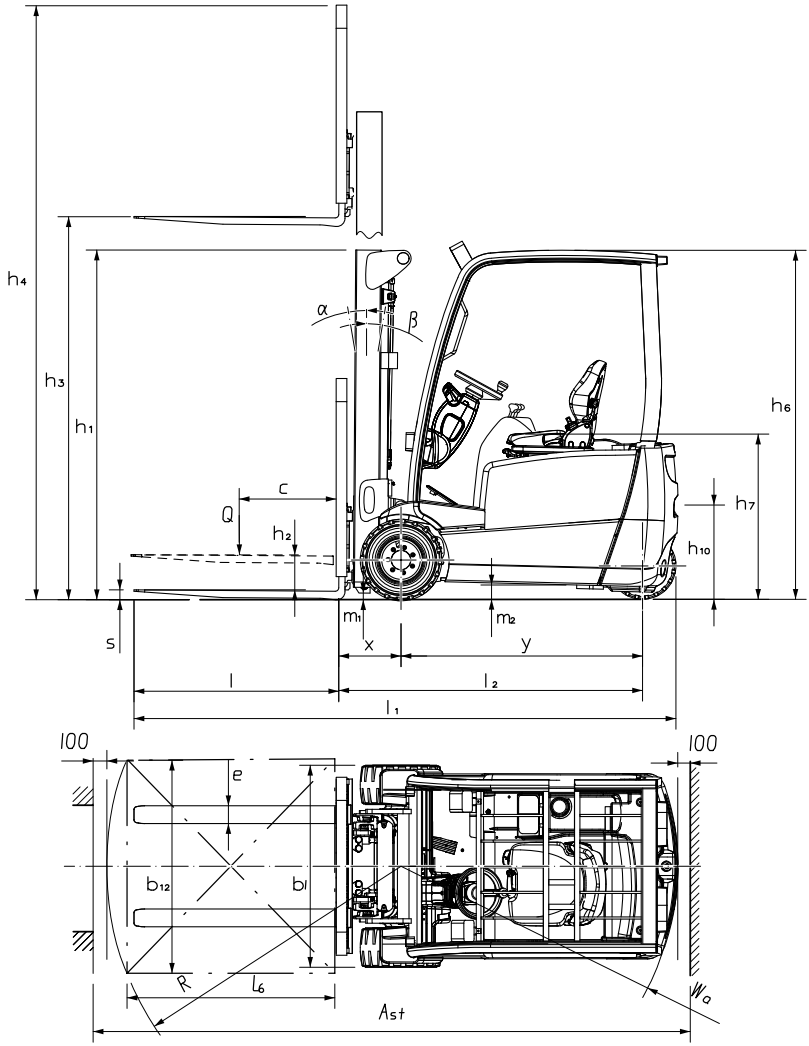
h4
h3
h1
α
β
h6
c
Q
h2
h7
h10
m1
m2
s
x
y
l
l2
l1
100
100
e
b12
b1
R
l6
Ast
Wa

0209.GB

3.2 Mast versions

(all dimensions in mm)

EFG 216kn mast chart				
VDI 3596 Description	**Lift h_3**	**Free lift h_2 EFG216kn**	**Height retr. h_1**	**Height extd. h_4 EFG 216kn**
ZT	3000	150	2000	4220
	3300	150	2150	4520
	3600	150	2300	4820
	4000	150	2500	5220
	4500	150	2800	5720
	5000	150	3050	6220
ZZ	3300	1545	2105	4520
	3600	1695	2255	4820
	4000	1895	2455	5220
DZ	4500	1445	2005	5720
	4800	1545	2105	6020
	5000	1620	2180	6220
	5500	1795	2355	6720
	6000	1995	2555	7220

3.3 Performance data

	Description	EFG 216kn	
Q	Capacity (where C = 500 mm) *)	1600	kg
C	Load centre	500	mm
	Travel speed w / w.o. load	16/16	km/h
	Lift speed (lift) w / w.o. load	0.38/0.59	m/s
	Lift speed (lower) w / w.o. load	0.55/0.55	m/s
	Gradeability (30 min) with / without load	7.3/12.3	%
	Max. gradeability (5 min) with / without load	20.0/35.0	%
	Acceleration (10 m) w / w.o. load	3.8/3.4	s

*) with vertical mast

3.4 Weights (all measurements in kg)

Description	EFG 216kn
Truck weight (including battery)	2990
Front axle load (without lifting load)	1410
Front axle load (with lifting load)	4015
Rear axle load (without lifting load)	1580
Rear axle load (with lifting load)	575

3.5 Tyre type

Description		EFG 216kn
Tyre size, front	SE	18 x 7 -8, 16PR
Tyre size, rear	SE	140 / 55 - 9

➔ Permissible tyres: See chapter F “Forklift Truck Maintenance”. If you have any queries please contact your Jungheinrich customer adviser.

3.6 EN norms

Noise emission: 66 dB(A)

in accordance with EN 12053 as harmonised with ISO 4871.

➔ The noise emission level is calculated in accordance with standard procedures and takes into account the noise level when travelling, lifting and when idle. The noise level is measured at the level of the driver's ear.

Vibration (measured with the MSG 65 driver's seat (○)):

0.79 m/s^2

in accordance with EN 13059.

➔ The vibration acceleration acting on the body in the operating position is, in accordance with standard procedures, the linearly integrated, weighted acceleration in the vertical direction. It is calculated when travelling over bumps at constant speed.

Electromagnetic compatibility (EMC)

The manufacturer confirms that equipment complies with tolerance levels for electromagnetic emissions and resistance as well as static electricity discharge testing in accordance with EN 12895 including the normative procedures contained therein.

➔ No changes to electric or electronic components or their arrangement may be made without the written agreement of the manufacturer.

3.7 Conditions of use

Ambient temperature

- operating at -20 °C to 40 °C

➔ Special equipment and authorisation are required if the truck is to be constantly used in conditions of extreme temperature or air humidity fluctuations.

4 Identification points and data plates

Warnings and notices such as load charts, strap points and data plates must be legible at all times. Replace if necessary.

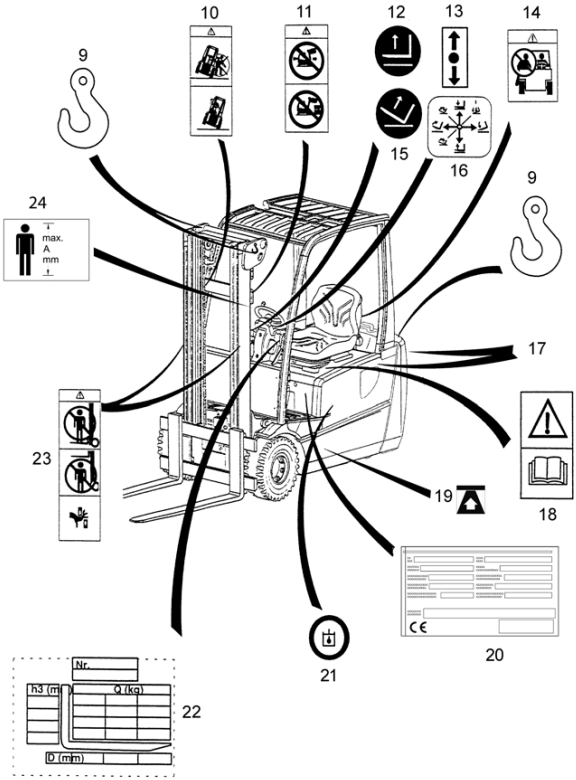

Item	Description
9	Strap points
10	Risk of crashing notice
11	Decal: Travelling with raised load, mast forward tilt with raised load forbidden
12	Lift notice
13	Forward / reverse notice
14	“No passengers” notice
15	Lower notice
16	Hydraulic function (Multi-Pilot) notice
17	Max. speed notice
18	Read operating instructions notice
19	Jack contact points
20	Data plate
21	Add hydraulic oil notice
22	Capacity decal
23	Do not step onto or beneath the load, trap point
24	Maximum body size notice

4.1 Truck data plate

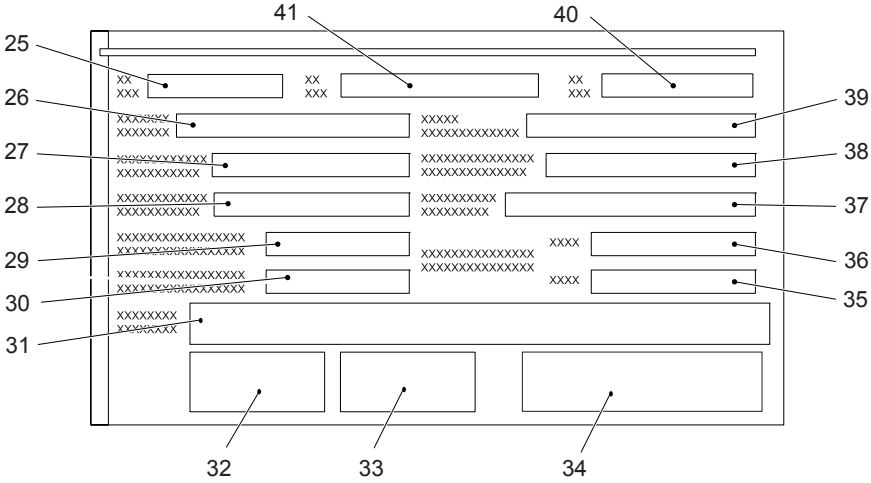

Item	Description	Item	Description
25	Type	34	Manufacturer’s logo
26	Name	35	Max. battery weight in kg
27	Battery: Voltage (V)	36	Min. battery weight in kg
28	Rated capacity (kg)	37	Output (kW)
29	Net weight w.o. battery (kg)	38	Load centre (mm)
30	Net weight with battery (kg)	39	Year of manufacture
31	Manufacturer	40	Serial No.
32	Production	41	Option
33	Production address		

➔ For queries regarding the truck or ordering spare parts always quote the truck serial number (26).

4.2 Truck load chart

The load chart (22) gives the capacity (Q) of the truck in kg with a vertical mast. The maximum capacity is shown as a table with a given load centre of gravity D (in mm) and the required lift height H (in mm).

Example:

22

Nr.		
h3 (mm)	Q (kg)	
4250	850	850	600
3600	1105	**1105**	850
2900	1250	1250	850
D (mm)	500	**600**	700

Example of how to calculate the maximum capacity:

With a load centre of gravity D of 600 mm and a maximum lift height H of 3600 mm. the max. capacity Q is 1105 kg.

4.3 Fork load chart (basic model)

The fork load chart give the truck's capacity Q in kg. The maximum capacity for the various load centres of gravity (D in mm) is shown in the form of a chart.

Nr		
h3 (mm)	Q (kg)	
D (mm)		

4.4 Attachment load chart

The attachment load chart gives the truck capacity Q in conjunction with the respective attachment in kg. The serial number specified in the load chart must match the data plate of the attachment, as the capacity for each truck is specifically indicated by the manufacturer. It is shown in the same way as the truck capacity and can be determined accordingly.

The arrow shape markings (37 and 38) on the inner and outer masts show the driver when the prescribed lift limits have been reached.

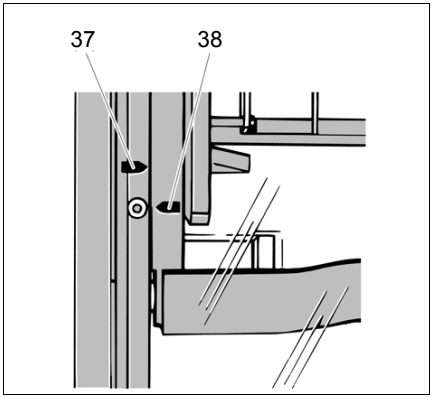

C Transport and Commissioning

1 Lifting by crane

⚠ Only use lifting gear with sufficient capacity
(transport weight = net. weight + battery weight, see truck data plate).

– Parking the truck securely (see Chapter E).
– Attach the crane slings to the cross member of the mast (1) and the trailer coupling (2).

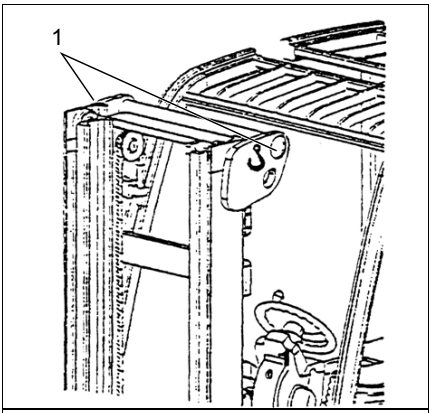

⚠ The crane lifting gear couplings must be fitted in such a way that they do not touch any attachments or the overhead guard during lifting.

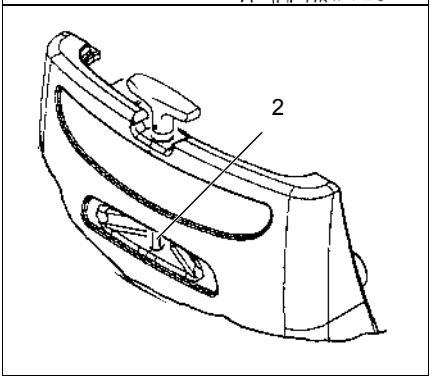

2 Securing the truck during transport

⚠ The truck must be securely fastened when transported on a lorry or a trailer. The lorry / trailer must have fastening rings. Loading must be carried out by specially trained staff in accordance with recommendations contained in Guidelines VDI 2700 and VDI 2703. In each case correct measurements must be made and appropriate safety measures adopted.

➔ To secure the truck with the mast assembled, use the eyes on the upper cross member of the mast and the trailer pins.

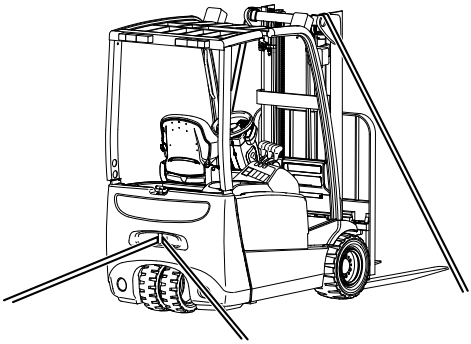

Securing the truck with an installed mast

➔ If the truck is to be transported without a mast, it must be tied down at the front over the overhead guard.

Securing the truck without a mast

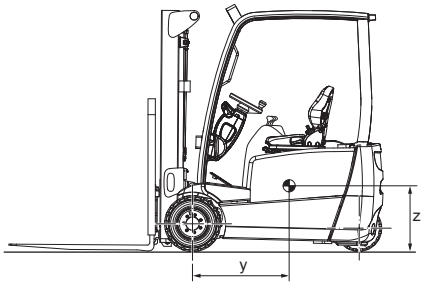

Approximate centre of gravity position

3 Using the truck for the first time

Commissioning and driver instruction must be performed by trained personnel. If several trucks are supplied, make sure that only load pickup devices, masts and basic trucks with the same serial number are assembled.

Only operate the truck with battery current. Rectified AC current will damage the electronic components. The battery leads (tow cables) must be less than 6m long.

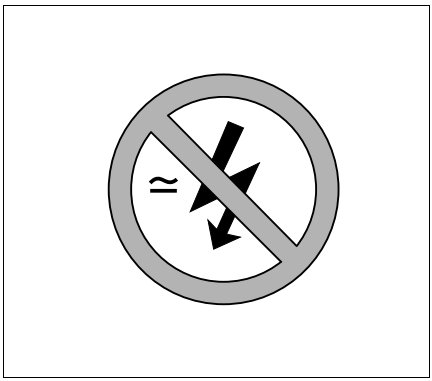

To prepare the truck after delivery or after transport, proceed as follows:

- Check the equipment is complete.
- Test the battery connections.
- Start up the truck as indicated. (see Chapter E).

4 Operating the Truck without its own Drive System

If the truck needs to be towed, proceed as follows:

- Attach the tow bar / rope to the trailer coupling of the recovery vehicle and the truck to be recovered.
- Disconnect the battery (see chapter D).
- Release the parking brake.

STOP One person must be seated in the towed truck to steer it. Tow the truck at walking speed.

➔ As the power steering system is not switched on, extra effort is required to steer the truck.

D Battery - Servicing, Recharging, Replacement

1 Safety Regulations Governing the Handling of Lead-Acid Batteries

Park the truck securely before carrying out any work on the batteries (see Chapter E).

Maintenance personnel: Recharging, servicing and replacing of batteries must only be performed by qualified personnel. This operator manual and the manufacturer's instructions concerning batteries and charging stations must be observed when carrying out the work.

Fire protection: Smoking and open flames are not permitted when handling batteries. Wherever a truck is parked for charging there shall be no inflammable material or consumables capable of creating sparks within a 2-meter area of the truck. The room must be ventilated. Fire protection equipment must be on hand.

Battery maintenance: The battery cell covers must be kept dry and clean. Terminals and cable shoes must be clean, lightly greased with terminal grease and must be securely tightened. Batteries with non insulated terminals must be covered with a non slip insulating mat.

Battery disposal: Batteries may only be disposed of in accordance with national environmental protection regulations or disposal laws. The manufacturer's disposal instructions must be followed.

Before closing the battery panel make sure that the battery lead cannot be damaged.

Batteries contain dissolved acid which is toxic and caustic. For this reason protective clothing and goggles must be worn whenever work is undertaken on batteries. Avoid physical contact with battery acid.
Nevertheless, should clothing, skin or eyes come in contact with acid the affected parts should be rinsed with plenty of clean water - where the skin or eyes are affected call a doctor immediately. Neutralise any spilled battery acid immediately.

Only batteries with a sealed battery container may be used.

The weight and dimensions of the battery have considerable affect on the operational safety of the truck. Battery equipment may only be replaced with the agreement of the manufacturer.

2 Battery types

The truck will be equipped with different battery types, depending on the application. The following table shows which combinations can be included as standard with reference to capacity:

EFG 216kn	48 V - 5PzS - 600 Ah battery

The battery weights are indicated on the battery data plate.

STOP When replacing/installing the battery make sure the battery is securely located in the battery compartment of the truck.

STOP The weight and size of the battery have a considerable affect on the operational safety of the truck. The size and weight of the batteries must therefore comply with the following table and diagram. The use of different batteries on the truck requires the manufacturer's authorisation.

48 volt drive battery						similar to DIN 43535
Truck	Dimension inch (mm)				Rated weight (-5/+8%) in kg	
	L max.	W max.	H1 +/- 2 mm	H2 +/- 2 mm		
EFG 216kn	830	630	612	627	856	500 - 630 Ah

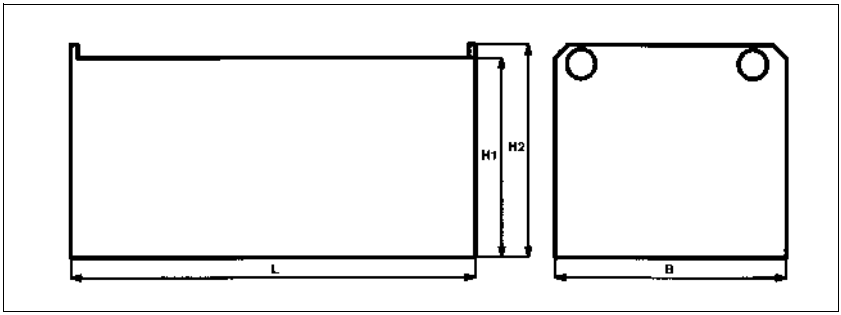

0409.GB

3 Exposing the battery

Park the truck securely (see chapter E).

– Release the steering column lock (1), push the steering column forward and secure it in this position.

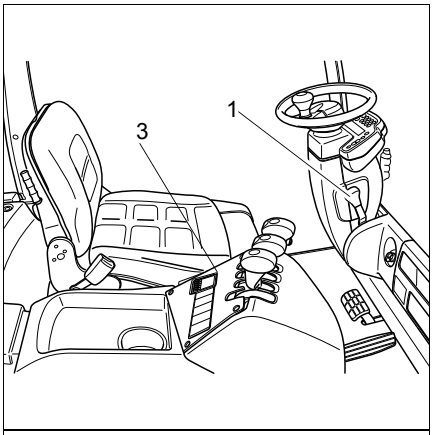

Pay extra attention when unlocking and locking the pilot valve cover.

– Press the lever (4) to unlock the pilot valve cover (2) and move it forward.
– Carefully lift back the battery panel (3) with the driver's seat.

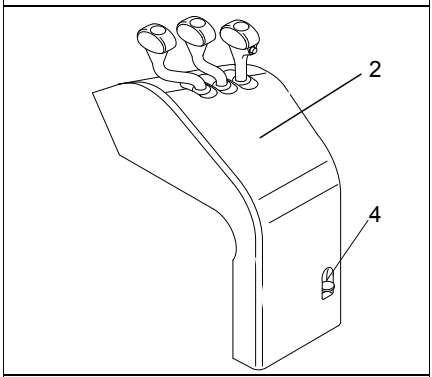

– Remove the battery connector (5).
– Where necessary remove the insulating mat from the battery.

The battery plug and socket may only withdrawn or connected when the main switch and the charging equipment are switched off.

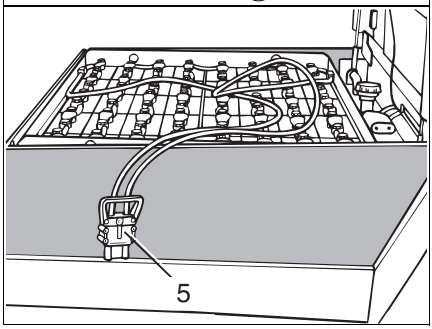

4 Charging the battery

– Expose the battery.

Always connect and disconnect the battery and charger when the charger is switched off.
When charging, the tops of the battery cells must be exposed to provide sufficient ventilation. Do not place any metal objects on the battery.

Before charging, check all cables and plug connections for visible signs of damage.

– Connect the battery charging station cable to the battery connector (5).
– Switch on the battery charging station and charge the battery in accordance with the battery and charging station manufacturers' instructions.

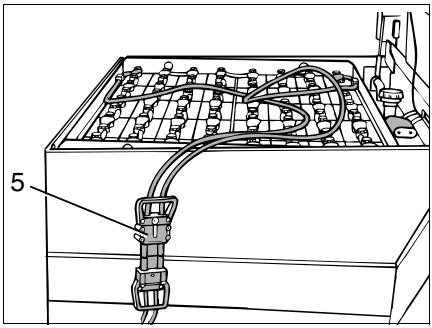

It is essential to follow the safety regulations of the battery and charging station manufacturers. The battery cover must remain open during charging to allow the gases produced to escape. Do not use fire or naked flames. Risk of explosion!

5 Battery removal and installation

– Expose the battery
– Pull out the side door (9, 10).

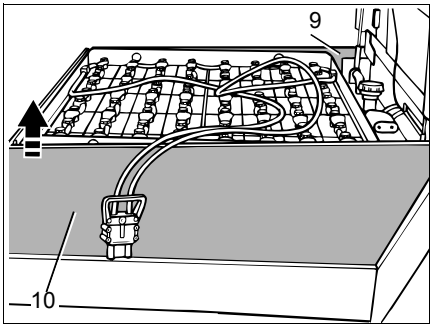

STOP To prevent short circuits, batteries with exposed terminals or connectors must be covered with a rubber mat. When replacing a battery with a crane, make sure the crane has sufficient capacity (see battery weight on the battery data plate on the container). The crane lifting harness is routed through the hole on the overhead guard and must exert a vertical pull to avoid crushing the battery container. Attach the hooks so that the cannot fall onto the battery cells when the crane lifting gear is discharged.

– Strap the crane lifting harness to the battery container.
– With the crane harness raise the battery above the chassis in the right hand travel direction and then move it out sideways.

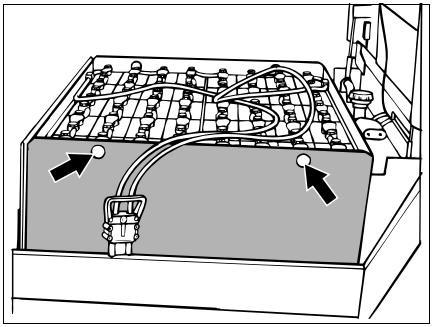

– Installation is the reverse order of removal.

STOP When replacing a battery always use the same battery type. After installing the battery, check all cables and plug connections for visible signs of damage. Panels and side doors must be properly closed.

STOP When replacing/installing the battery make sure the battery is securely located in the battery compartment of the truck.

6 Closing the battery cover

– Pull the control valve cover (2) forward
– Lock the control valve cover in position

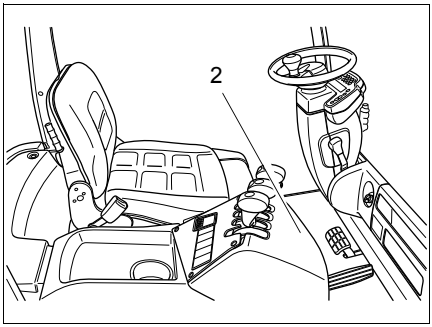

7 Battery Discharge Indicator, Battery Discharge Monitor, Hourmeter

Battery Discharge Indicator: The battery charge status (12) is shown in 10% increments on the multitask display screen (100% = 100% battery capacity, 0% = 20% battery capacity).

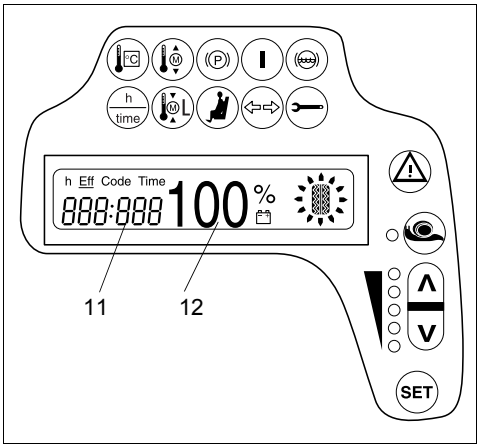

⚠ The standard setting for the battery discharge indicator / discharge monitor is based on standard batteries.
When using maintenance free batteries the display must be set so that the T symbol appears after the percentage figure. If this adjustment is not made the battery may become damaged through excessive depletion. This instrument should only be adjusted by the manufacturer's service department.

When the battery residual capacitance reaches 20 % for standard batteries or 40 % for maintenance free batteries the battery must be charged up.

Battery Discharge Monitor: If the residual capacity falls below the required level, lifting is inhibited. A message appears on the multi-task display screen.

➔ Lifting is only enabled when the battery connected is at least 40% charged.

Hourmeter: The service hours (11) are displayed next to the battery charge status. The service hours are counted only when the truck is switched on **and** the seat switch is closed.

E Operation

1 Safety regulations for the operation of forklift trucks

Driver authorisation: The forklift truck may only be used by suitably trained personnel, who have demonstrated to the proprietor or his representative that they can drive and handle loads and have been authorised to operate the truck by the proprietor or his representative.

Driver's rights, obligations and responsibilities: The driver must be informed of his duties and responsibilities and be instructed in the operation of the truck and shall be familiar with the operator manual. The driver shall be afforded all due rights.
Safety shoes must be worn for pedestrian operated trucks.

Unauthorised use of truck: The driver is responsible for the truck during the time it is in use. The driver must prevent unauthorised persons from driving or operating the truck. Do not carry passengers or lift other people.

Damage and faults: The supervisor must be immediately informed of any damage or faults to the truck or attachment. Trucks which are unsafe for operation (e.g. wheel or brake problems) must not be used until they have been rectified.

Repairs: The driver must not carry out any repairs or alterations to the industrial truck without the necessary training and authorisation to do so. The driver must never disable or adjust safety mechanisms or switches.

Hazardous area: A hazardous area is defined as the area in which a person is at risk due to truck movement, lifting operations, the load handler (e.g. forks or attachments) or the load itself. This also includes areas which can be reached by falling loads or lowering operating equipment.

STOP Unauthorised persons must be kept away from the hazardous area. Where there is danger to personnel, a warning must be sounded with sufficient notice. If unauthorised personnel are still within the hazardous area the truck shall be brought to a halt immediately.

Safety devices and warning signs: Safety devices, warning signs and warning instructions shall be strictly observed.

2 Controls and Displays

Item	Control / Display		Function
1	Steering wheel	●	Steers the truck with 5 full turns from left to right.
2	Multitask display	●	Displays the battery capacity, service hours, errors, key warning indicators, wheel position and travel direction (see Section 2.3).
3	Parking brake	●	Secures the truck when stationary.
4	Steering column stop	●	Adjusts and fixes the steering column to the required distance.
5	Key switch	●	Switches control current on and off. Removing the key prevents the truck from being switched on by unauthorised personnel.
6	Accelerator pedal	●	Provides infinitely variable control of travel speed.
7	Brake pedal	●	Decelerates the truck.
9	Optional equipment control lever	○	e.g. display for work lights on
10	Isolator Emergency Disconnect	●	Switches power supply on and off.
11	Direction switch	●	Sets the required travel direction.
12	Horn	●	Activates a warning signal.
13	Solo Pilot Lift - Lower	●	Lifts / lowers the forks.
14	Control lever Mast - tilt	●	Tilts the forks forward / backward.
15	Control lever Auxiliary hydraulics (ZH1) e.g. sideshifter	○	Moves the forks to the right / left.
16	Control lever Auxiliary hydraulics (ZH2)	○	Used for hydraulic attachments.

● = Standard equipment	○= Optional equipment

Truck with Solo Pilot and control levers

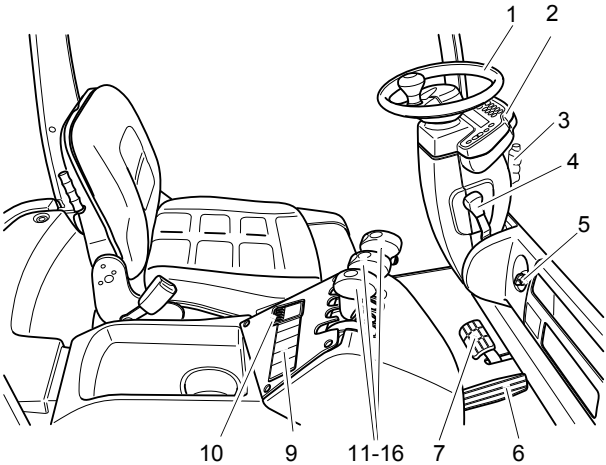

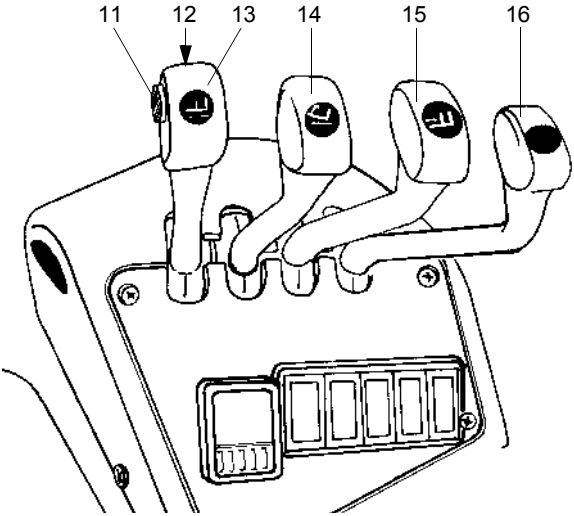

2.1 Instrument panel switches

	Function
	Hazard warning switch
	“Beacon / parking light” switch

2.2 Control panel switches

	Function
	Crawl speed switch
	“Truck lighting” switch (parking light / dimmed headlights)
	“Work lights” switch

2.3 Multitask display

The multitask display shows the operating data, the battery charge, the service hours and error details and information. Graphic illustrations on the multitask display act as warning indicators.

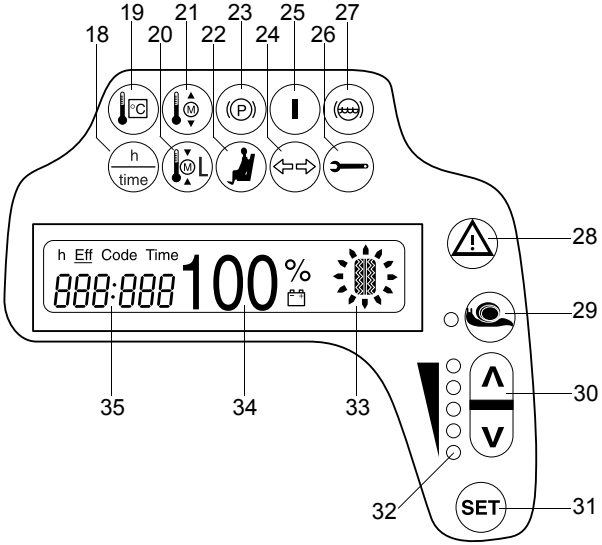

Item	Display
18	Service hours / time toggle switch
19	Controller overtemperature
20	Pump motor overtemperature
21	Drive motor overtemperature
22	Seat switch
23	Parking brake applied
24	Travel direction indicator ○
25	Truck operational (key switch ON)
26	Service display / UVV display
27	Brake fluid level too low
28	Lights up for errors or when battery capacity is less than 10%
29	Crawl speed button
30	Program selector
31	SET key
32	Operating program display (programs 1 to 5)
33	Travel direction and wheel position display
34	Battery capacity display
35	Time and service hours or diagnostics and error display

2.4 Warning displays, buttons and switches

The following conditions are displayed or switched on:

Item	Display / Function
18	Hourmeter / time toggle switch – Truck key switch ON operating hours – EFF service hours can be switched ON or OFF via a code. – Time display
19	Controller overtemperature – Lights up to indicate controller overtemperature – Performance is continually reduced in relation to the temperature
20	Pump motor, steering booster overtemperature – Monitors the temperature of the pump motor and the steering booster – Performance is reduced if the temperature is excessive
21	Drive motor overtemperature – Monitors the temperature of the drive motor – Performance is reduced if the temperature is excessive
22	Seat switch – Seat switch not closed – Truck operational but driver's seat not occupied
23	Parking brake applied – Truck operational, parking brake applied
24	Travel direction indicator ○ – For lighting with a flashing indicator system
25	Truck operational – Key switch ON
26	Service display / UVV display – The specified service interval has expired (1000 service hours) or 12-monthly UVV test is due (flashing display)
27	Insufficient brake fluid – The brake fluid level can be checked through sensors on the brake fluid reservoir.
28	WARNING – Lights up to indicate error – Flashes when battery capacity is less than 10%
29	Crawl speed button – Travel speed max. 6 km/h (adjustable)
30	Program selector – Up and Down keys
31	SET key – Selects special functions
32	Operating program display – Displays the selected travel program (1 to 5)

2.5 Displays

Item	Function
33	Travel direction and wheel position display – Indicates the pre-selected travel direction (forward or reverse) or the position of the steered wheels.
34	Battery capacity display in % Indicates the available residual capacity. 0 % display = battery 80 % discharged. For a 10 % display the warning indicator flashes (42). At 0 % capacity lifting is cut out after 30 to 40 seconds.
35	Operating hours display / Error display – Operating hours display: – eff: shows the overall working time Error display: – If an error (Err) or a warning (Inf) occurs, the operating hour display disappears. The error code is displayed. – If several errors occur they are displayed alternately in intervals of 1.5 seconds and a warning is sounded.

2.6 Setting the time

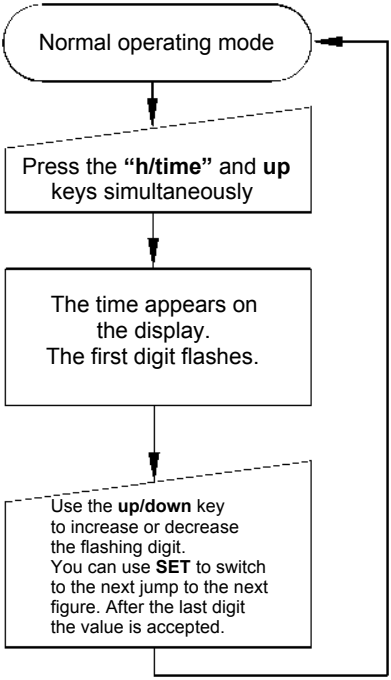

2.7 Driver's Display Warning Messages

Display	Meaning
INFO 03	Traction or lift controller temperature above 83°C.
INFO 08	Travel with handbrake on – Accelerator pedal pressed although the handbrake is applied.
INFO 33	Travel 2 controller overvoltage
INFO 34	Hydraulic controller overvoltage
INFO 35	Travel 2 controller low voltage
INFO 36	Travel 1 controller low voltage
INFO 37	Hydraulic controller low voltage
INFO 38	Travel 1 controller overvoltage

3 Starting up the Truck

Before the truck can be commissioned, operated or a load unit lifted, the driver must ensure that there is nobody within the hazardous area.

3.1 Checks and operations to be performed before starting daily operation

- The entire truck (in particular wheels and load handler) must be inspected for damage.
- Make sure the load chains are evenly tensioned.
- Visually inspect the battery attachment and cable connections.
- Test warning indicators and safety devices.
- Test horn.
- Test the seat belt.

3.2 Trucks with reduced headroom X (○)

Failure to observe the recommended body size can cause stress and endanger the driver and may lead to lasting ill health due to an unhealthy posture and excessive strain on the driver.
The owner must ensure that truck operators do not exceed the max. body size indicated.
In addition the owner must check that the drivers can sit in an upright position without having to strain.

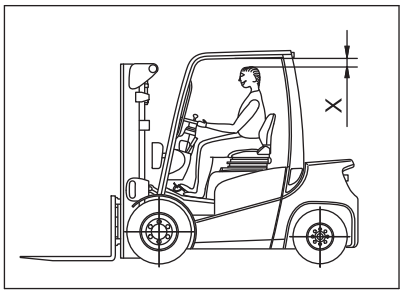

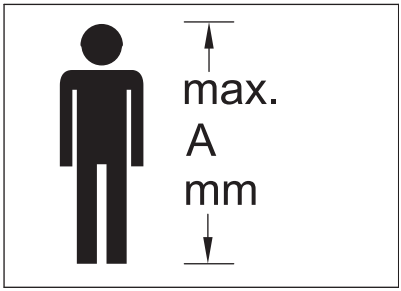

3.3 Driver's seat

To achieve optimum seat cushioning, the driver’s seat must be adapted to the driver’s weight.
To adapt it to the driver’s weight, the seat must be vacated.

Adjusting the driver’s weight:

– Pull the weight adjuster (38) forward.

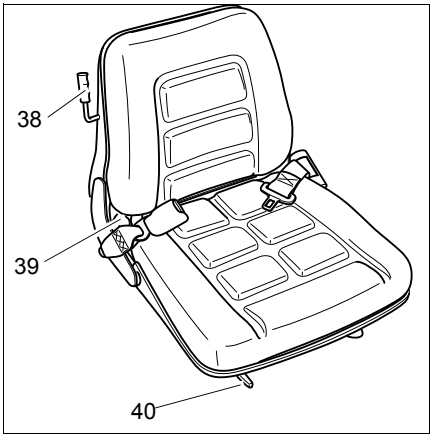

The setting can be made to match the driver's weight.
Position 1 = Driver weight up to 60 kg.
Position 2 = Driver weight up to 80 kg.
Position 3 = Driver weight from 95 kg.

– Sit on the driver’s seat.

To adjust the backrest:

– Turn the backrest adjuster (39) clockwise and tilt the backrest backwards.
– Turn the backrest adjuster (39) anti-clockwise and tilt the backrest forward.
– Release the backrest tilt adjuster (39) to lock the backrest in position.

To adjust the seat position:

– Pull driver's seat lock (40) into the middle and push the driver’s seat forwards or backwards to the desired position.
– Push the driver’s seat lock (40) back out again and lock it in position.

STOP The driver’s seat must be securely locked in the desired position. The driver’s seat setting must not be changed during travel.

The procedure for adjusting the driver’s seat applies to standard models. For other models, follow the manufacturer’s setting instructions. When adjusting the seat make sure that all controls can be reached easily.

3.3.1 MSG 65 driver's seat (○)

To achieve optimal seat cushioning the driver’s seat must be adapted to the driver’s weight.

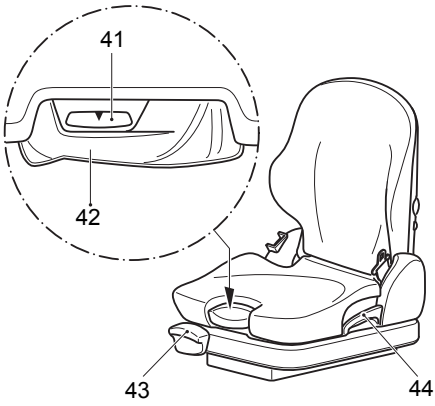

Adjusting the seat to the driver's weight:

– Sit on the driver’s seat. When the correct weight adjustment has been made, the arrow of the driver weight display (41) will be above the calibration line. If the arrow is facing too far to the left or right, the seat must be adjusted to the driver's weight.
– To do this, move the weight adjustment lever (42) approx. 90° forward.
– To set the seat to a lesser weight, push the weight adjustment lever (42) down.
– To set the seat to a greater weight, push the weight adjustment lever (42) up.
– After adjusting, return the lever to its original position.

To adjust the backrest:

– Sit on the driver’s seat.
– Lift up the backrest adjuster (44) and adjust the backrest tilt.
– Release the backrest tilt adjuster (44) to lock the backrest in position.

To adjust the seat position:

– Pull up the longitudinal adjuster (43) and push the driver’s seat forwards or backwards to the desired position.
– Engage the longitudinal adjuster (43) in position again.

The longitudinal adjuster must be securely located in the desired position. The driver’s seat setting must not be changed during travel.

3.4 Adjusting the steering column

– Loosen the steering column lock (4) and push the steering column forward or back into the desired position.
– Retighten the steering column.

3.5 Preparing the truck for operation

– Unlock the isolator (10).
  To do this:
  Press the rocker in (⬇) and pull it up (⬆) until you feel the isolator engaging.
– Insert the key in the key switch (5) and turn it clockwise as far as it will go to the “I” position.
– Test the horn switch (12).

STOP Test the electric, hydraulic and parking brakes.

The truck is now operational. The battery discharge and fault indicator (34) shows the current battery capacity.

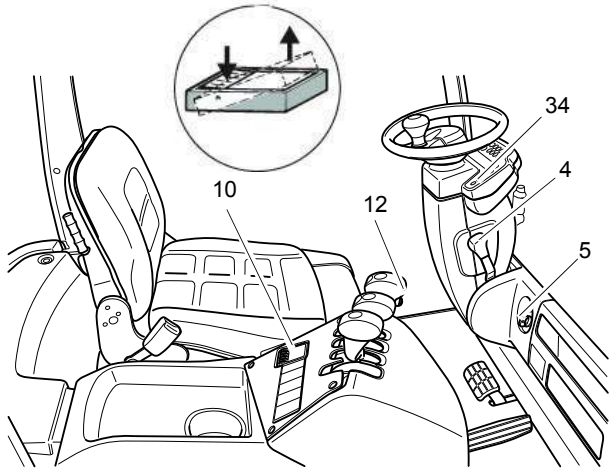

3.6 Safety restraint belt

STOP Put on the seat belt each time before starting the industrial truck.
The belt protects against serious injury.

Protect the belt from contamination (e.g. cover it when the truck is idle) and clean it regularly. If the belt catch or retractor is frozen, let it thaw and allow it to dry to avoid freezing again.

➔ The dry temperature of the warm air should not exceed +60°C.

STOP Do not alter the belt setting.
This will increase the risk of malfunctioning.

– Always replace the seat belt after an accident.
– Only original spare parts must be used for retrofits or repairs.

STOP Damaged or non-operational belts must only be replaced by contractual dealers or branches.

How to act in unusual situations

STOP If the truck is about to tip over, never undo the restraint belt and try to jump out.
This will only increase the risk of injury.

Correct procedure:

– Lean your upper body over the steering wheel.

– Grip the steering wheel with both hands and brace feet.

– Lean your body against the opposite direction of fall.

Restraint belt operating instructions

Before starting the truck carefully pull the belt out of the pulley, pull it tightly across your body and over your thigh, and engage it in the lock.

STOP The belt must not be twisted when you put it on.

When operating the truck (e.g. travelling, lifting, lowering, etc.), sit as far back as possible so that your back is against the backrest.

The automatic locking retractor allows sufficient freedom of movement on the seat.

STOP Sitting at the front edge of the seat affords less protection, as the belt is too long.

➔ The belt is only to be used to secure one person.

– After using the belt, push the red button and manually guide the latch back to the retractor.

➔ The automatic blocking system can be triggered if the seat belt tongue strikes the housing. In this case the belt cannot be rolled out.

Deactivating the blocking system:

– Apply force to pull the belt 10mm – 15mm out of its housing.
– Feed the belt back in to undo the automatic blocking system.

The belt can now be extracted again.

Starting the industrial truck on steep slopes

The automatic blocking system locks the belt in the retractor when the truck is positioned on a steep slope. This prevents the belt from being pulled out of the retractor.

➔ Carefully drive the truck off the slope and then put on the belt.

4 Industrial Truck Operation

4.1 Safety regulations for truck operation

Travel routes and work areas: Only use lanes and routes specifically designated for truck traffic. Unauthorised third parties must stay away from work areas. Loads must only be stored in places specially designated for this purpose.

Travel conduct: The driver must adapt the travel speed to local conditions. The truck must be driven at slow speed when negotiating bends or narrow passageways, when passing through swing doors and at blind spots. The driver must always observe an adequate braking distance between the forklift truck and the vehicle in front and must be in control of the truck at all times. Abrupt stopping (except in emergencies), rapid U turns and overtaking at dangerous or blind spots are not permitted. Do not lean out or reach beyond the working and operating area.

Travel visibility: The driver must look in the direction of travel and must always have a clear view of the route ahead. When carrying loads which affect visibility, these must be stored at the rear of the truck. If this is not possible, a second person must walk in front of the truck as a lookout.

Negotiating slopes and inclines: Negotiating slopes or inclines is only permitted if such roads are clean and have a non-slip surface and providing such journeys are safely undertaken in accordance with the technical specifications for the truck in question. The truck must always be driven with the load unit facing uphill. The industrial truck must not be turned, operated at an angle or parked on inclines or slopes. Inclines must only be negotiated at slow speed, with the driver ready to brake at any moment.

Negotiating lifts and docks: Lifts and docks must only be used if they have sufficient capacity, are suitable for driving on and authorised for truck traffic by the owner. The driver must satisfy himself of the above before entering these areas. The truck must enter lifts with the load in front and must take up a position which does not allow it to come into contact with the walls of the lift shaft. People travelling in the lift with the forklift truck must only enter the lift after the truck has come to a halt and must exit the lift before the truck.

Nature of loads to be carried: The driver must ensure that the load is in a suitable condition. Only carry properly secured loads. Never transport loads stacked higher than the top of the fork carriage or the load guard.

4.2 Travel

Travelling in electromagnetic fields beyond the permitted limits can result in random truck motion.
Apply the Emergency Disconnect (main switch) immediately, activate the service brake and apply the parking brake.
Determine the cause of the fault and if necessary inform the manufacturer's service department.

Safety switch, driver's seat

If the driver's seat is not occupied or if the driver's weight is set too high, travelling is interrupted by the safety switch (see chapter E, "Setting the Driver's Weight").

Do not drive the truck unless the panels are closed and properly locked.
Travel routes must be free of obstacles.
Adapt the travel speed to the conditions of the travel lane, the work area and the load.

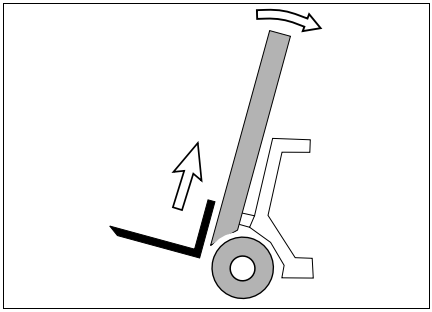

- Raise the fork carriage approx. 300 mm so that the fork tines are clear of the ground.
- Tilt the mast fully backward.

Forward travel .

Make sure that the travel area is clear

- Release the parking brake (3)
- Push the travel direction switch (11) forward.
- Slowly actuate the accelerator (6)

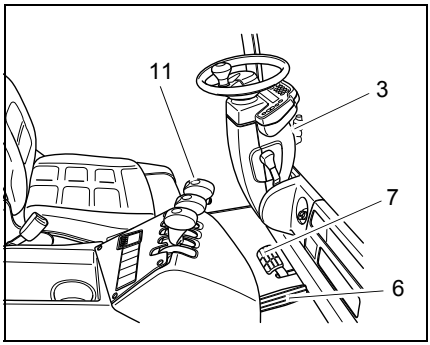

Changing direction

Before travelling in the opposite direction make sure that the rear travelling area is free.

- Take your foot off the accelerator pedal (6).
- Applying the brake pedal (7), bring the truck to a halt.
- Slowly apply the accelerator pedal (6) until you reach the required travel speed.

Reversing

Make sure you have sufficient space to reverse into.

– Set the travel direction switch (11) backwards.
– Slowly apply the accelerator pedal (6) until you reach the required travel speed.

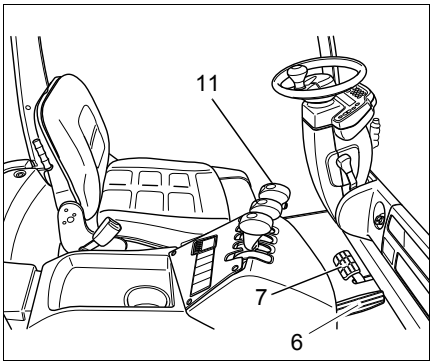

Accelerating

– Slowly apply the accelerator pedal (6) until the truck starts to move.
– Continue to depress the accelerator (6). The motor speed and travel speed increase the more you apply the accelerator.

Braking

The brake pattern depends largely on the ground conditions. The driver must take this into consideration when handling the truck. Carefully decelerate the truck so that the load does not slide.
If you are travelling with an attached load you must increase the braking distance.

– Take your foot off the accelerator pedal (6) and if necessary apply the brake pedal (7) gently.

4.3 Steering

Very minimal steering effort is required for the electric steering, therefore turn the steering wheel sensitively.

Negotiating right hand bends

– Turn the steering wheel clockwise according to the required steering radius.

Negotiating left hand bends

– Turn the steering wheel anti-clockwise according to the required steering radius.

4.4 Braking

There are four ways of braking:

– Service brake
– Coasting brake
– Reversing brake
– Parking brake

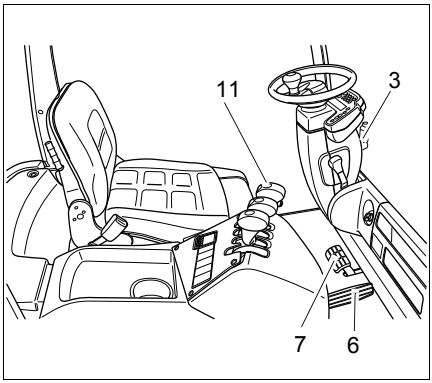

Service brake:

– Depress the brake pedal (7) until you feel the brake pressure.

The service brake acts on the drive wheels via the multi-plates.

Coasting brake:

– Take your foot off the accelerator pedal (6). The truck brakes regeneratively via the traction controller.

This method reduces energy consumption.

Reversing brake (single pedal):

Set the travel direction button (11) to the opposite direction while travelling. The truck is generatively braked by the traction current controller until the truck starts to travel in the opposite direction.

Parking brake:

– Pull the parking brake (3) back. The parking brake is engaged and the parking brake lever is locked in this position.
– Push the locking knob on the parking brake (3) and push the lever forward to release the brake.

The parking brake acts mechanically on the drive wheels via the multi-plates.
An alarm is sounded if the truck travels with the parking brake applied.

The parking brake will hold the truck with the maximum load, on a clean ground surface, on a 15% incline.

4.5 Operating the lift mechanism and attachments (SOLO-PILOT)

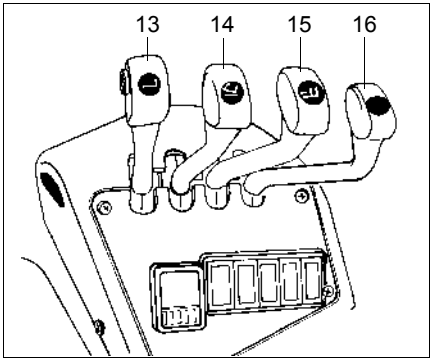

The control levers must only be operated from the driver's seat. The driver must be instructed in how to operate the lifting unit and the attachments.

Lifting/lowering the fork carriage

– Pull the Solo Pilot (13) back to raise the fork carriage.
– Move the Solo Pilot (13) forward to lower the fork carriage.

Tilting the mast forward / backward

When tilting the mast back, ensure that no part of your body is between the mast and the front panel.

– Pull the control lever (14) back to tilt the mast back.
– Push the control lever (14) forward to tilt the mast forward.

4.5.1 Controlling Attachments (SOLO-PILOT)

Note the manufacturer's operating instructions and the capacity of the attachment. Do not lift people with the lifting device.

– Pull the auxiliary hydraulics control lever ZH1 (15) backwards or push it forward to control the attachment (e.g. sideshifter).

– Pull the auxiliary hydraulics control lever ZH2 (16) backwards or push it forward to control the attachment (e.g. fork positioner).

Moving the lever controls the lift speed of the hydraulic cylinder.
When the lever is released it automatically reverts to neutral and the lifting device remains in the position it has reached.

Always apply the control lever sensitively, never with a sudden jerk. Release the control lever as soon as the lifting device reaches the limit position.

Integrated Sideshift (○)

The fork carriage can be moved sideways using the integrated sideshift.

– Pull the auxiliary hydraulics control lever ZH1 (15) back = sideshift right.

– Push the auxiliary hydraulics control lever ZH1 (15) forward = sideshift left.

Other Attachments

Additional equipment can only be attached with written permission from the manufacturer, see chapter A “Attaching Accessories”. Always follow the manufacturer’s operating instructions when using other attachments.

The control levers of the attachments must be indicated by symbols to illustrate the function of the attachment.

⚠ The reduced residual capacity must be re-calculated and indicated by a separate capacity plate.

4.6 Lifting, transporting and depositing loads

⚠ Before lifting a load the driver must make sure that it has been correctly palletised and does not exceed the truck's capacity.
Note the load chart!

Adjusting the forks

STOP Adjust the fork tines in such a way that both are equally distanced from the outer edge of the fork carriage and the load centre of gravity lies in the middle of the fork tines.

– Raise the locking lever (45).
– Push the forks (46) into the correct position on the fork carriage (47).
– Turn the locking lever down and move the fork tine until it engages in a slot.

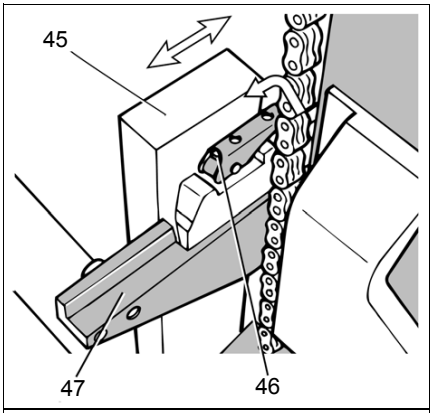

Lifting loads

– Carefully approach the load to be lifted.
– Apply the parking brake (3).

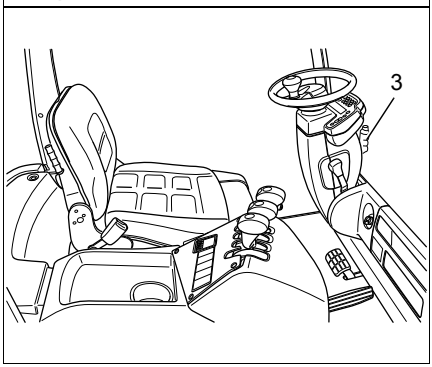

– Set the mast vertical.
– Raise the forks to the correct height for the load.

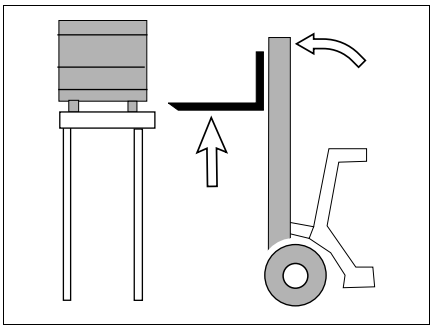

– Drive the truck with forks spread as far apart as possible underneath the load.

STOP At least two thirds of their length must extend into the load.

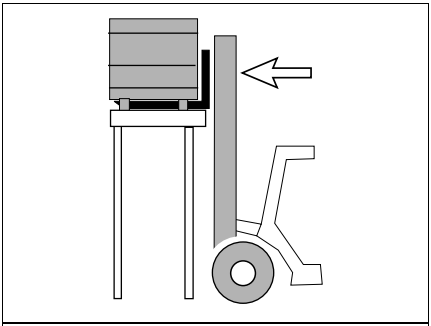

– Apply the parking brake (3). Raise the fork carriage until the load rests freely on the forks.
– Set the travel direction switch (11) to reverse and release the parking brake.

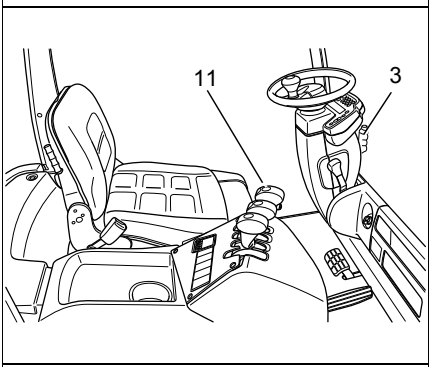

STOP Make sure you have enough space to reverse into.

– Reverse carefully and slowly until the load is outside the storage area.

STOP Do not stand underneath a raised load. Do not reach through the mast.

– Tilt the mast carefully backward.
– Lower the load as far as is absolutely necessary for transport (ground clearance approx. 150...300 mm).

STOP When transporting loads, the mast must be tilted back and the forks lowered as far as possible.

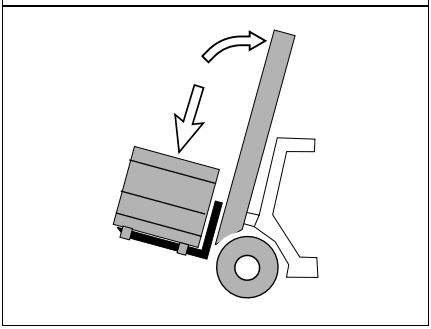

Transporting loads

If the load is stacked so high that it affects forward visibility, then reverse.

- Gently accelerate with the accelerator pedal (6) and slowly brake with the brake pedal (7). Be ready to brake at all times.
- Adapt your travel speed to the conditions of the route and the load you are transporting.
- Watch out for other traffic at crossings and passageways.
- Always travel with a lookout at blind spots.

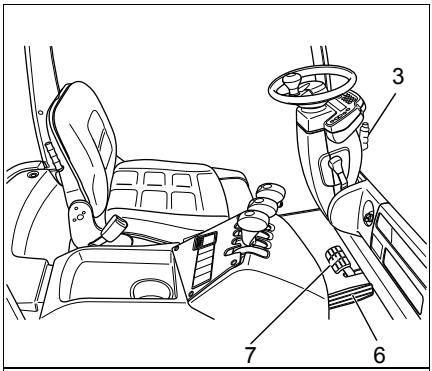

On slopes and inclines always carry the load facing uphill, never approach at an angle or turn.

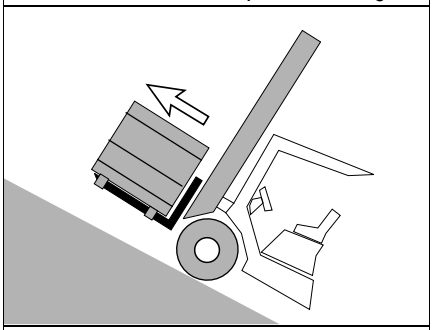

Depositing loads

- Drive the truck carefully up to the load handler.
- Apply the parking brake (3).
- Set the mast vertical.
- Lift the forks to the appropriate height relative to the load lifting device.
- Release the parking brake.
- Carefully enter the load aid.
- Slowly lower the load until the forks are free.

Avoid placing the load down suddenly to avoid damaging the load and the load aid.

You can only tilt forward when the load aid is raised in front of or above the stack.

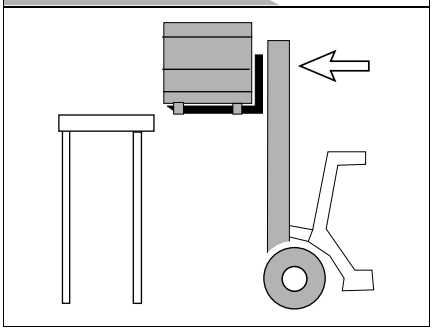

4.7 Parking the truck securely

When you leave the truck it must be securely parked even if you only intend to leave it for a short time.

– Drive the truck onto a level surface.
– Apply the parking brake (3).
– Fully lower the load forks and tilt the mast forward.

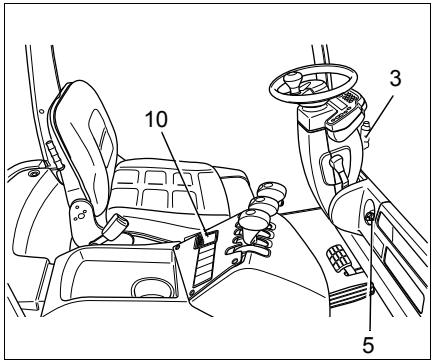

Never park and abandon a truck with a raised load.

– Depress the main switch (10).
– Turn the key in the key switch (5) to "0".
– Remove the key from the key switch (5).

4.8 Towing trailers

The truck can occasionally be used to tow a light trailer on a dry, level and well maintained surface.

The max. tow load is the capacity indicated on the capacity data plate (see decals diagram in chapter B).

The tow load consists of the weight of the trailer and the stated capacity.
If a load is transported on the forks, the tow load must be reduced by the same amount.

STOP Important notes for safe towing

- A truck must not be continually operated with trailers.
- Do not use supporting loads.
- The maximum speed is 5km/h.
- Towing must only be performed on level, secure travel routes.
- Follow the instructions of the coupling manufacturer if using special trailer couplings.
- The owner must test trailer operation with the permissible tow load by means of a trial run under the applicable operating conditions on site.

Attaching the trailer

– Push the tow pin (48) down and turn it 90 degrees.
– Pull the tow pin up and insert the tiller of the trailer vehicle into the opening.
– Insert the tow pin, push it down, turn it 90 degrees and engage it.

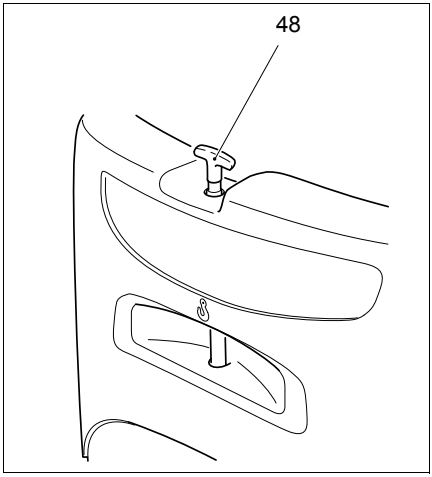

5 Troubleshooting

This chapter allows the user to identify and rectify basic faults or the effects of incorrect operation. When trying to locate a fault, proceed in the order shown in the table.

Fault	Possible Cause	Action
Truck does not start	– Battery connector not plugged in	– Check battery connector and insert if necessary.
	– Isolator pressed	– Release isolator
	– Key switch in "0" position.	– Set key switch to “I”
	– Battery charge too low	– Check battery charge, charge battery if necessary
	– Faulty fuse	– Check fuses
Load cannot be lifted	– Truck not operational	– Carry out all measures listed under “Truck does not move”
	– Hydraulic oil level too low	– Check the hydraulic oil level
	– Faulty fuse	– Check fuses

⚠ If the fault cannot be rectified after carrying out the above procedures, notify the manufacturer’s service department, as further troubleshooting can only be performed by specially trained and qualified service personnel.

5.1 Temperature control

If a temperature switch applies the power is reduced. This operates as a function of the temperature:
for "crawl speed",
for the "half lift speed" hydraulic function,
for the "continual power deactivation" controllers.

F Industrial Truck Maintenance

1 Operational Safety and Environmental Protection

The servicing and inspection duties contained in this chapter must be performed in accordance with the intervals indicated in the maintenance checklists.

Any modification to the forklift truck assemblies, in particular the safety mechanisms, is prohibited. Do not alter the truck's operating speeds under any circumstances.

Only original spare parts have been passed by our quality assurance service. To ensure safe and reliable operation of the truck, use only the manufacturer's spare parts. Old parts, oils and fuels must be disposed of in accordance with the applicable environmental protection regulations. For oil changes, contact the manufacturer’s specialist department.

Upon completion of inspection and servicing, the tasks contained in the “Recommissioning” section must be performed (see chapter F).

2 Maintenance Safety Regulations

Maintenance personnel: Industrial trucks must only be serviced and maintained by the manufacturer’s trained personnel. The manufacturer’s service department has field technicians specially trained for these tasks. We therefore recommend that you enter into a maintenance contract with the manufacturer’s local service centre.

Lifting and jacking up: When an industrial truck is to be lifted, the lifting gear must only be secured to the points specially provided for this purpose. When jacking up the truck, take appropriate measures to prevent the truck from slipping or tipping over (e.g. wedges, wooden blocks). You may only work underneath a raised load handler if it is supported by a sufficiently strong chain.

For jack points see Chapter B.

Cleaning: Do not use flammable liquids to clean the industrial truck. Prior to cleaning, implement all necessary safety measures to prevent sparking (e.g. through short circuits). For battery-operated trucks, the battery connector must be removed. Only weak suction or compressed air and non-conductive antistatic brushes may be used for cleaning electric or electronic assemblies.

If the truck is to be cleaned with a water jet or a high-pressure cleaner, all electrical and electronic components must be carefully covered beforehand as moisture can cause malfunctions.
Do not clean with pressurised water.

After cleaning the truck, carry out the operations detailed in the “Recommissioning” section.

Electrical System: Only suitably trained personnel may operate on the truck's electrical system. Prior to the commencement of any work on a battery charger, all required measures must be taken to prevent electric shocks. For battery-operated trucks, also de-energise the truck by removing the battery connector.

Welding: To avoid damaging electric or electronic components, remove these from the truck before performing welding operations.

Settings: When repairing or replacing hydraulic, electric or electronic components or assemblies, always note the truck-specific settings.

Wheels: The quality of wheels affects the stability and performance of the truck.
When replacing factory fitted wheels, only use manufacturer’s original spare parts. Otherwise the truck's rated performance cannot be ensured.
When replacing wheels, ensure that the truck does not slew (e.g. always replace wheels in pairs, i.e. left and right wheels at the same time).

Lift chains: Lift chains wear rapidly if not lubricated. The intervals stated in the service checklist apply to normal duty use. More demanding conditions (dust, temperature) require more regular lubrication. The prescribed chain spray must be used in accordance with the instructions. Applying grease externally will not provide sufficient lubrication.

Hydraulic hoses: The hoses must be replaced every six years. When replacing hydraulic components, also replace the hoses in the hydraulic system.

3 Servicing and Inspection

Thorough and expert servicing is one of the most important requirements for the safe operation of the industrial truck. Failure to perform regular servicing can lead to truck failure and poses a potential hazard to personnel and equipment.

⚠ The application conditions of an industrial truck have a considerable impact on the wear of the service components.
We recommend that a Jungheinrich customer adviser carries out an application analysis on site to work out specific service intervals to prevent damage due to wear. The service intervals stated are based on single shift operation under normal operating conditions. They must be reduced accordingly if the truck is to be used in conditions of extreme dust, temperature fluctuations or multiple shifts.

The following maintenance checklist states the tasks and intervals after which they should be carried out. Maintenance intervals are defined as:

W = Every 50 service hours, at least weekly
A = Every 500 service hours
B = Every 1000 service hours, or at least annually
C = Every 2000 service hours, or at least annually

➔ W maintenance interval operations are performed by the proprietor.

During the run-in period – after approx. 100 service hours – the owner must check the wheel nuts/bolts and re-tighten if necessary.

4 EFG216kn Maintenance Checklist

			Maintenance Intervals			
			Standard = ●	W	A	B	C
Chassis/Superstructure:	1.1	Check all load bearing components for damage			●	
	1.2	Check screw connections			●	
	1.3	Check trailer hitch			●	
	1.4	Check overhead guard for damage and make sure it is secure			●	
	1.5	Test seat belt operation and check for damage	●			
	1.6	Test restraint system (option) operation and check for damage	●			
	1.7	Check decals. Make sure they are present, legible and valid.			●	
	1.8	Check overhead guard suspension pre-tension, replace if necessary			●	
Drive system:	2.1	Check gear for noise and leakage			●	
	2.2	Check gear oil level			●	
	2.3	Check pedal mechanism, adjust and lubricate if necessary			●	
	2.4	Replace gear oil (at least every 12 months)			●	
Wheels:	3.1	Check wheels for wear and damage	●			
	3.2	Check air pressure	●			
	3.3	Check suspension and attachment			●	
	3.4	Replace wheel bearing grease fillings for front and rear wheels and re-adjust the wheel bearings.			●	
Steering:	4.1	Test operation of hydraulic components and check for leaks			●	
Brake system:	5.1	Test operation and settings			●	
	5.2	Check brake mechanism, adjust and lubricate if necessary			●	
	5.3	Check brake lines, connections and brake fluid level			●	
	5.4	Replace brake fluid				●
Hydraulic system:	6.1	Check connections and ports for leaks and damage			●	
	6.2	Check ventilation and discharge filter on hydraulic tank			●	
	6.3	Check oil level			●	
	6.4	Check hydraulic cylinder for leaks and damage and make sure it is secure			●	
	6.5	Test hose guide and check for damage			●	
	6.6	Replace filter cartridge (hydraulic oil and discharge filter)			●	
	6.7	Replace hydraulic oil				●
	6.8	Test operation of pressure relief valves			●	

			Maintenance Intervals			
			Standard = ●	W	A	B	C
Electrical system:	7.1	Test operation of instruments and displays		●			
	7.2	Make sure wire connections are secure and check for damage				●	
	7.3	Test cable guide operation and check for damage				●	
	7.4	Test all warning devices and safety switches.				●	
	7.5	Check contactors, replace any worn parts.				●	
	7.6	Check fuse ratings				●	
	7.7	Clean the impulse controller				●	
Electric motors:	8.1	Check motor attachment				●	
	8.2	Clean engine radiator fins				●	
Battery:	9.1	Check battery cables for damage, replace if necessary.		●			
	9.2	Check acid density, acid level and cell voltage		●			
	9.3	Check terminals are securely attached, and apply terminal screw grease				●	
	9.4	Clean battery connections, make sure they are tight				●	
Mast:	10.1	Apply lubricant to tracks and lateral stopping face of the guide rollers in the mast sections.		●			
	10.2	Lubricate all the lubrication points on the mast and fork carriage guide rollers.		●			
	10.3	Check lift chains and guides for wear, adjust and lubricate.				●	
	10.4	Lubricate the lift chains and chain guide		●			
	10.5	Check mast attachment				●	
	10.6	Check tilt cylinder suspension and attachment				●	
	10.7	Check forks and fork carriage for wear and damage				●	
	10.8	Visually inspect rollers, slide pieces and stops				●	
	10.9	Check mast tilt angle. Make sure both tilt cylinders extend evenly.				●	
	10.10	Check mast play and if necessary adjust lateral play using spacers.				●	
General Measure-ments:	11.1	Test electrical system for frame leakage in accordance with VDI 2511				●	
	11.2	Test travel speed and braking distance				●	
	11.3	Test lift and lowering speeds				●	
Demonstra-tion:	12.1	Test run with rated load				●	
	12.2	After carrying out maintenance, present the truck to the supervisor.				●	

5 EFG 216kn lubrication chart

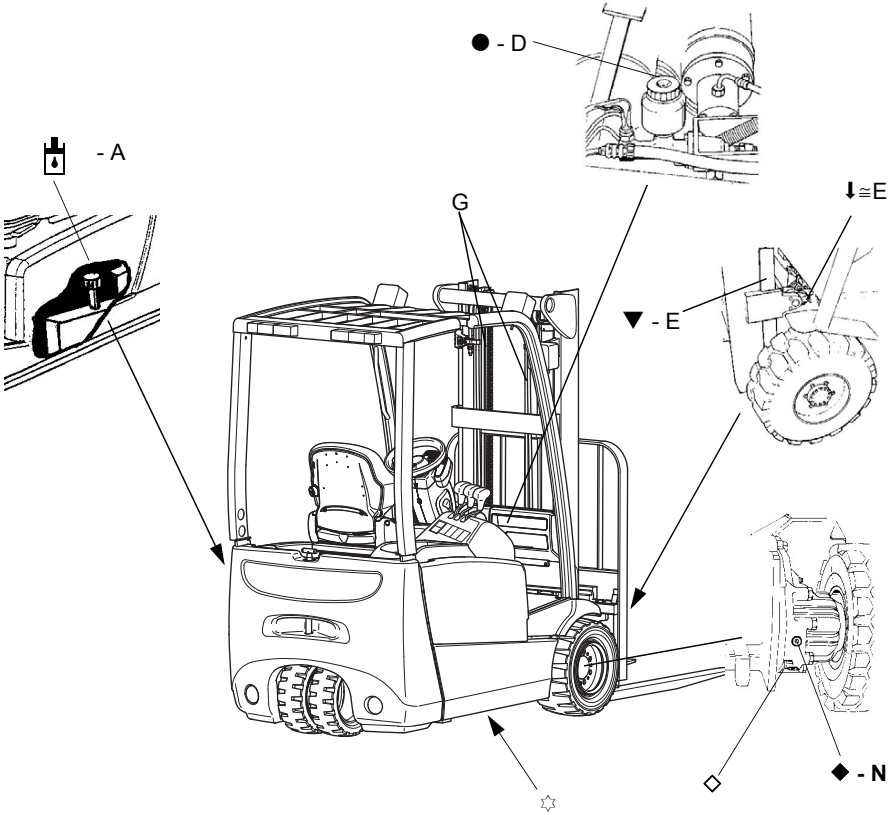

▼ Contact surfaces

⬇ Grease nipple

Hydraulic oil filler neck

Hydraulic oil drain plug,
on the bottom left of the truck

◆ Gear oil filler neck

◇ Gear oil drain plug

● Brake fluid filler neck

0409.GB

5.1 Consumables

Handling consumables: Consumables must always be handled correctly. Follow the manufacturer's instructions.

Improper handling is hazardous to health, life and the environment. Consumables must only be stored in appropriate containers. They may be flammable and must therefore not come into contact with hot components or naked flames.

Only use clean containers when filling up with consumables. Do not mix consumables of different grades. The only exception to this is when mixing is expressly stipulated in the Operating Instructions.

Avoid spillage. Spilled liquids must be removed immediately with suitable bonding agents and the bonding agent / consumable mixture must be disposed of in accordance with regulations.

Code	Order no.	Quantity	Description	Used for
A	50426072	14.5 l	H-LP 32 [1]	Hydraulic system
	50429647		H-LP 22 [2]	
	50124051		HV 68 [3]	
D	29201570	0.25	Brake fluid SEA J 1703 [4] FMVSS 116 DOT 4 and DOT 4	Hydraulic brake system
E	50157382		Lubrication grease K-L 3N[3]	Front and rear wheel bearings
G	29201280		Chain spray	Chains
N	50124052	2 x 0.35 l	ATF/ Dexron-II D gear oil	Gear

Grease guidelines

Code	Saponification	Dew point °C	Worked penetration at 25 °C	NLG1 class	Application temperature °C
E	Lithium	185	265-295	2	-35/+120

[1] Applicable for temperature range -5/+30 °C
[2] Applicable for temperature range -20/-5 °C
[3] Applicable for temperature range +30/+50 °C
[4] Preferably use DOT 4 brake fluid.

6 Maintenance Instructions

6.1 Preparing the truck for maintenance and repairs

All necessary safety measures must be taken to avoid accidents when carrying out maintenance and repairs. The following preparations must be made:

– Park the truck securely (see chapter E).
– Disconnect the battery so that the truck cannot be started by unauthorised persons (refer to chapter D).

STOP When working under a raised load fork or a raised truck, secure them to prevent them from lowering, tipping or sliding away. When raising the truck refer also to the instructions in the “Transport and Commissioning” section.
When working on the parking brake, prevent the truck from rolling away.

6.2 Opening the rear panel

– Undo the two screws, push the rear panel back and remove it.

The fuses, hydraulic pump and electric components can now be reached.

6.3 Checking the wheel attachments.

– Park the truck securely (see chapter E).
– Tighten the wheel nuts (1) crosswise with a torque wrench.

Torque

Drive wheels	M_A = 140 Nm
Rear wheels	M_A = 135 Nm

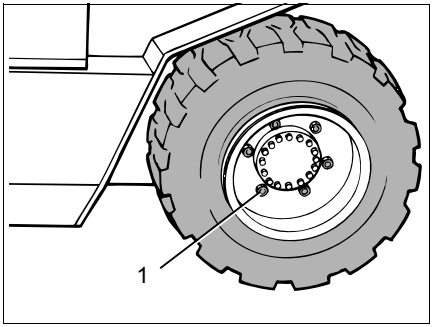

6.4 Rear wheel rated condition

The diameter of the rear wheels must differ by no more than 15 mm.

The tyres must always be replaced in pairs. Always use tyres of the same make, model and profile.

6.5 Checking the hydraulic oil level

The load lifting device must be fully lowered.

– Prepare the truck for maintenance and repairs.
– Unscrew the air filter (2) and dipstick.

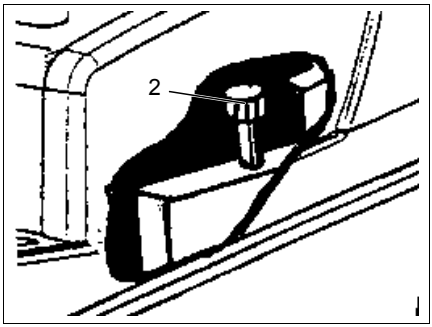

– Visually inspect the hydraulic oil level on the dipstick (3).

When the tank is sufficiently full, the hydraulic oil level should be visible at the top mark (4).

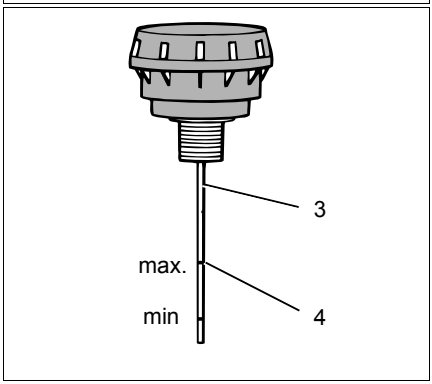

– If necessary add hydraulic oil up to the level indicated (10 mm on the dipstick (3) corresponds to approx. 1 litre hydraulic oil).

Do not fill the hydraulic reservoir above the top mark as this can result in malfunctions and system damage.
Used consumables must be disposed of in accordance with the relevant environmental protection regulations.

6.6 Checking the gear oil level

Gear oil must never enter the ground; therefore place a collection tray underneath the gear.

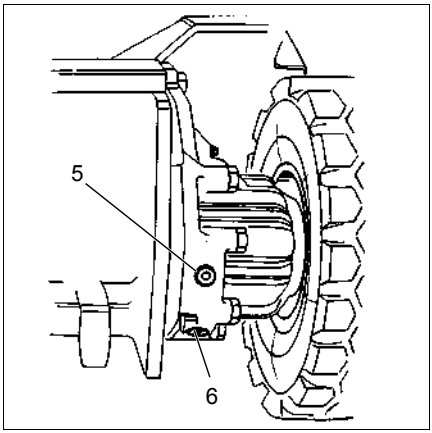

- Park the truck securely (see chapter E).
- Unscrew the oil refill plug (5).
- Check gear oil level, top up if necessary.

The oil level should reach the bottom mark of the refill hole.

Used consumables must be disposed of in accordance with the relevant environmental protection regulations.

6.7 Draining the oil

- Drain oil at operating temperature.
- Prepare an oil collection tray underneath.
- Unscrew the oil drain plug (6) and drain the gear oil.

6.8 Adding oil

- Screw in the oil drain plug.
- With the oil filler plug (5) unscrewed, add new gear oil.

6.9 Replacing the hydraulic oil filter

The hydraulic oil filter is located to the left of the tilt cylinder and can be accessed when the floor board has been removed.

- Unscrew the hydraulic oil filter cap (7).
- Replace the filter insert; if the O ring is damaged it will also need to be replaced. Apply a thin layer of oil to the O ring on assembly.
- Screw in the cap again.

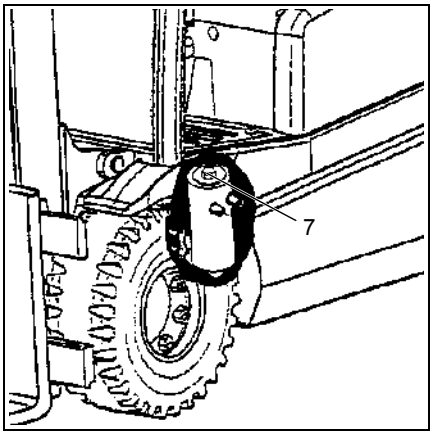

6.10 Checking the brake fluid level

Brake fluid is poisonous and should therefore only be stored in sealed, original containers.

– Park the truck securely (see chapter E).
– Remove the floor mats.
– Unscrew the mounting screw and remove the floor board (8).

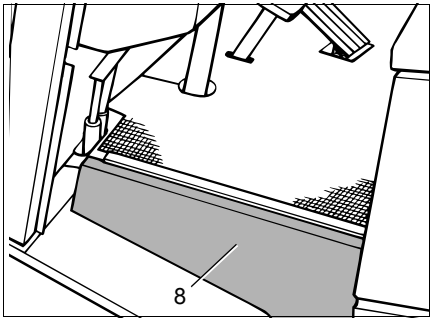

– Visually inspect the brake fluid level from the brake fluid reservoir (9), if necessary add brake fluid.

The brake fluid level should lie between the “Min.” and “Max.” levels.

Used consumables must be disposed of in accordance with the relevant environmental protection regulations.

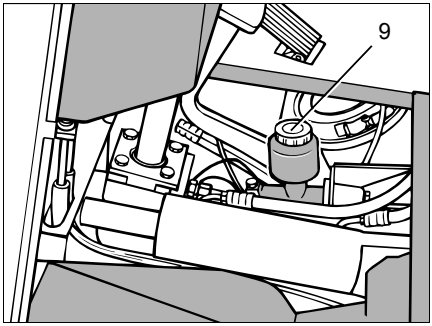

6.11 Seat belt maintenance

The driver must check the operation and condition of the seat belt every day before using the industrial truck. Faulty operation can only be detected in good time through regular inspection.

– Pull out the belt completely and check for fraying
– Test the belt buckle and make sure the belt returns correctly into the retractor.
– Check the cover for damage.

Testing the automatic blocking system:

– Park the truck on a horizontal surface
– Pull the belt out suddenly.

The automatic system should lock the belt in the retractor.

– Open the engine bonnet approx. 30 degrees

The automatic system should lock the belt in the retractor.

Do not operate the truck with a faulty seat belt. Replace it immediately.

6.12 Checking electrical fuses

– Prepare the truck for maintenance and repairs.
– Open the rear panel.
– Unscrew the cover.
– Check condition and rating of the fuses in accordance with the table.

STOP To avoid damaging the electrical system, only use fuses with the appropriate rating.

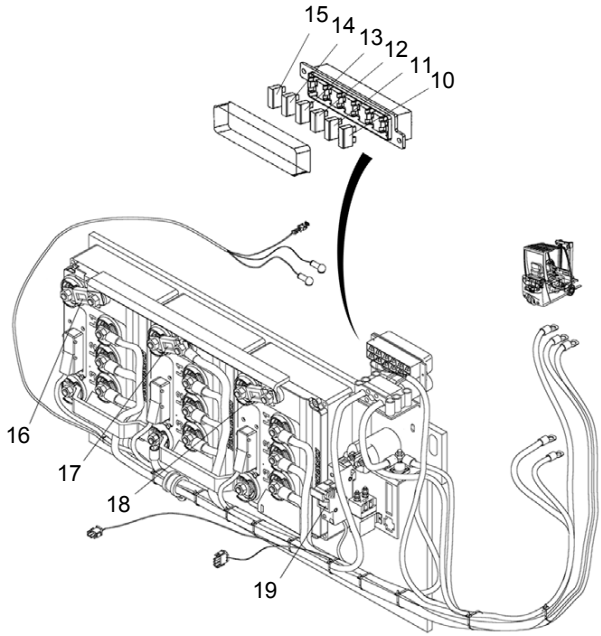

Item	Description	Electric circuit	Rating / type
10	F3.1	Vacant for 48 volt options	5 A
11	F3.1	Vacant for 48 volt options	5 A
12	5F5	Vacant for 48 volt options	5 A
13	F1	Overall control circuit fuse	15 A
14	1F9	Electronic system control fuse	5 A
15	F18	Contactor control fuse power supply	2 A
16	1F1	Drive motor 1	250 A
17	1F2	Drive motor 2	250 A
18	2F1	Hydraulic motor	250 A
19	3F1	Power steering motor	40 A

6.13 Recommissioning

The truck may only be restored to service after cleaning or repair work, once the following operations have been performed.

– Test horn.
– Test main switch operation.
– Test brakes.
– Lubricate the truck in accordance with the lubrication chart.

7 Decommissioning the industrial truck

If the industrial truck is to be decommissioned for more than two months, e.g. for operational reasons, it must be parked in a frost-free and dry location and all necessary measures must be taken before, during and after decommissioning as described.

⚠ On decommissioning the truck must be jacked up so that all the wheels are clear of the ground. This is the only way of ensuring that the wheels and wheel bearings are not damaged.

If the truck is to be out of service for more than 6 months, further measures must be taken in consultation with the manufacturer's service department.

7.1 Prior to decommissioning:

– Thoroughly clean the truck.
– Check the brakes.
– Check the hydraulic oil level and replenish as necessary (see Chapter F).
– Apply a thin layer of oil or grease to any non-painted mechanical components.
– Lubricate the truck in accordance with the lubrication schedule (see Chapter F).
– Charge the battery (see Chapter D).
– Disconnect the battery, clean it and grease the terminals.

➔ In addition, follow the battery manufacturer's instructions.

– Spray all exposed electrical contacts with a suitable contact spray.

7.2 During decommissioning:

Every 2 months:

– Charge the battery (see Chapter D).

⚠ Battery powered trucks:
The battery must be charged at regular intervals to avoid depletion of the battery through self-discharge. The sulfatisation would destroy the battery.

7.3 Returning the truck to operation after decommissioning

- Thoroughly clean the truck.
- Lubricate the truck in accordance with the lubrication schedule (see Chapter F).
- Clean the battery, grease the terminals and connect the battery.
- Charge the battery (see Chapter D).
- Check gear oil for condensed water and replace if necessary.
- Check hydraulic oil for condensed water and replace if necessary.
- Start up the truck (see Chapter E).

➔ Battery powered trucks:
If there are switching problems in the electrical system, apply contact spray to the exposed contacts and remove any oxide layers on the contacts of the operating controls by applying them repeatedly.

STOP Perform several brake tests immediately after re-commissioning the truck.

8 Safety tests to be performed at intervals and after unusual incidents

➔ Perform a safety check in accordance with national regulations. Jungheinrich recommends the truck be checked to FEM guideline 4.004. Jungheinrich has a safety department with trained personnel, able to carry out inspections.

The truck must be inspected at least annually or after any unusual event by a qualified inspector (be sure to comply with national regulations). The inspector shall assess the condition of the truck from purely a safety viewpoint, without regard to operational or economic circumstances. The inspector shall be sufficiently instructed and experienced to be able to assess the condition of the truck and the effectiveness of the safety mechanisms based on the technical regulations and principles governing the inspection of forklift trucks.

A thorough test of the truck must be undertaken with regard to its technical condition from a safety aspect. The truck must also be examined for damage caused by possible improper use. A test report shall be provided. The test results must be kept for at least the next 2 inspections.

The owner is responsible for ensuring that faults are immediately rectified.

➔ A test plate is attached to the truck as proof that it has passed the safety inspection. This plate indicates the due date for the next inspection.

9 Final de-commissioning, disposal

➔ Final, correct de-commissioning or disposal of the truck must be performed in accordance with the regulations of the country of use. In particular, regulations governing the disposal of batteries, fuels and electronic and electrical systems must be observed.

A Traction Battery Appendix

Contents

1 Correct Use and Application

Failure to observe the operating instructions, carrying out repairs with non-original spare parts, tampering with the battery or using electrolyte additives will invalidate the warranty.

Observe the instructions for maintaining the safety rating during operation for batteries in accordance with Ex I and Ex II (see relevant certification).

2 Data plate

1	Battery name
2	Battery type
3	Production week/year manf.
4	Serial number
5	Supplier number
6	Rated voltage
7	Rated capacity
9	Battery weight in kg
8	Number of cells
15	Electrolyte volume in litres
10	Battery number
11	Manufacturer
13	Manufacturer's logo
12	CE mark only for batteries beyond 75 volts
14	Safety instructions and warning information

3 Safety Instructions, Warning Indications and other Notes

	Used batteries must be treated as hazardous waste. These batteries are marked with the recycling symbol and the sign showing a crossed-out rubbish bin, and should not be disposed of with ordinary household waste. waste. Buy-back terms and type of recycling are to be agreed with the manufacturer as described in § 8 of the battery legislation.
	Do not smoke! No naked flames, glowing embers or sparks near the battery - fire and explosion hazard!
	Avoid fire and explosion hazards and short circuits due to overheating! Keep away from naked flames and strong heat sources.
	Always wear protective clothing (e.g. safety goggles and safety gloves) when working on cells and batteries. batteries. Always wash your hands after completing the work. Use insulated tools only. Do not physically alter the battery, strike, crush, compress, notch, dent or modify it in any way.
	Hazardous electric voltage! The metal parts of the battery cells are permanently live. Therefore do not place any foreign objects or tools on the battery. Observe national health and safety regulations.
	If the materials leak, do not inhale the fumes. Wear safety gloves.
	Follow the user instructions and keep them in a visible position in the charging area. Work on the batteries should be performed only as instructed by specialist personnel.

4 Lead acid batteries with armour plated cells and liquid electrolyte

4.1 Description

Jungheinrich traction batteries are lead acid batteries with armour plated cells and liquid electrolyte. The names of the traction batteries are PzS, PzB, PzS Lib and PzM.

Electrolyte

The rated density of the electrolyte assumes a temperature of 30°C and the rated electrolyte level is fully charged. Higher temperatures will reduce, lower temperatures will increase the electrolyte density. The adjustment factor is ± 0.0007 kg/l per K, e.g. electrolyte density 1.28 kg/l at 45°C corresponds to a density of 1.29 kg/l at 30°C.

The electrolyte must conform to DIN 43530 Part 2 purity regulations.

4.1.1 Battery nominal data

1.	Product	Traction battery
2.	Nominal voltage	2.0 V x no. of cells
3.	Rated capacity C5	See data plate
4.	Discharge current	C5/5h
5.	Nominal electrolyte density[1]	1.29 kg/l
6.	Nominal temperature[2]	30 °C
7.	System rated electrolyte level	up to "Max" electrolyte level marking
	Limit temperature[3]	55°C

1. Reached within the first 10 cycles.
2. Higher temperatures shorten the useful life, lower temperatures reduce the available capacity.
3. Not permissible as operating temperature.

4.2 Operation

4.2.1 Commissioning unfilled batteries

➔ The operations required must be carried out by the manufacturer's customer service department or a customer service organisation authorised by the manufacturer.

4.2.2 Commissioning filled and charged batteries

Checks and operations to be performed before starting daily work

Procedure

- Make sure the battery is in physically good condition.
- Make sure the terminals are correct (positive to positive and negative to negative) and check that contacts on the battery terminal conducting system are secure.
- Check the terminal screw torques (M10 = 23 ±1 Nm) of the terminal conductors and connectors.
- Charge up the battery.
- Check the electrolyte level.

➔ The electrolyte level must be above the cell baffle or the top of the separator.

- Add electrolyte with distilled water up to the nominal level.

Checks completed.

4.2.3 Discharging the battery

➔ To achieve an optimum useful life avoid operational discharge of more than 80% of nominal capacity (full discharge). This corresponds to a minimum electrolyte density of 1.13 kg/l at the end of the discharge. Recharge a discharged battery immediately.

4.2.4 Charging the battery

⚠ WARNING!

The gases produced during charging can cause explosions

The battery gives off a mixture of oxygen and hydrogen (electrolytic gas) during charging. Gassing is a chemical process. This gas mixture is highly explosive and must not be ignited.

- ▶ Always disconnect the charger and truck before connecting or disconnecting the charger and battery.
- ▶ The charger must be adapted to the battery in terms of voltage, charge capacity and battery technology.
- ▶ Before charging, check all cables and plug connections for visible signs of damage.
- ▶ Ventilate the room in which the truck is being charged.
- ▶ Battery cell surfaces must remain exposed during charging in order to ensure sufficient ventilation, see truck operating instructions, chapter D, Charging the Battery.
- ▶ Do not smoke and avoid naked flames when handling batteries.
- ▶ Wherever an industrial truck is parked for charging there must be no inflammable material or consumables capable of creating sparks within a minimum distance of 2 m from the truck.
- ▶ Fire protection equipment must be available.
- ▶ Do not place any metallic objects on the battery.
- ▶ Always follow the safety regulations of the battery and charger station manufacturers.

NOTE

The battery must only be charged with DC current. All charging processes in accordance with DIN 41773 and DIN 41774 are permissible.

➔ The electrolyte temperature rises by approx. 10 K during charging. Charging should therefore only begin when the electrolyte temperature is below 45°C. The electrolyte temperature of batteries must be at least +10°C before charging. Otherwise the battery will not charge correctly. Below 10°C the battery is insufficiently charged with standard charging systems.

Charging the battery

Requirements

– Electrolyte temperature min. 10°C to max. 45°C

Procedure

- Open or take off the tray lid or covers from the battery compartment.

➔ Deviations are outlined in the truck's operating instructions. The plugs remain on the cells or remain closed.

- Connect the battery to the switched off charger, ensuring the terminals are connect (positive to positive and negative to negative).
- Switch on the charger.

Battery charged

➔ *Charging is considered to be complete when the electrolyte density and battery voltage remain constant for more than 2 hours.*

Compensation charging

Compensation charging is used to ensure the useful life and maintain capacity after full discharge and repeated insufficient charging. The maximum compensation charge current is 5 A/100 Ah rated capacity.

➔ Compensation charging should be carried out weekly.

Trickle charging

Battery trickle charging is partial charging that extends the daily application time. Higher average temperatures occur during trickle charging which reduce the useful life of the batteries.

➔ Trickle charges should only be performed when the charge level is below 60 %. Use replacement batteries instead of regular trickle charging.

4.3 Servicing lead-acid batteries with armour plated cells

Water quality

➔ The quality of the water used to fill up electrolyte must correspond to purified or distilled water. Purified water can be produced through distillation or ion exchangers and is then suitable for the production of electrolyte.

4.3.1 Daily

- Charge the battery after each discharge.
- After charging, check the electrolyte level.
- If necessary, add purified water up to the rated level after charging.

➔ The height of the electrolyte level should not be below the cell baffle or above the top of the separator, or the "Min" and "Max" electrolyte markings respectively.

4.3.2 Weekly

- After re-charging, carry out a visual inspection for dirt and physical damage.
- If the battery is charged regularly according to the IU characteristic, carry out a compensation charge.

4.3.3 Monthly

- Towards the end of the charging process measure and record the voltages of all the cells with the charger switched on.
- After charging measure and record the electrolyte density and the electrolyte temperature in all the cells.
- Compare the results with the previous ones.

➔ If you find significant differences compared with the previous measurements or differences between the cells, contact the manufacturer's customer service department.

4.3.4 Annually

- Measure the truck insulation resistance in accordance with EN 1175-1.
- Measure the battery insulation resistance in accordance with EN 1987-1.

➔ In accordance with DIN EN 50272-3 the battery insulation resistance should not be less than 50 Ω per volt of rated voltage.

5 PzV and PzV-BS lead-acid batteries with sealed armour plated cells

5.1 Description

PzV batteries are sealed batteries with fixed electrolytes, to which no water can be added over the entire lifespan of the battery. Relief valves are used as plugs which are destroyed when opened. During operation the same safety requirements apply to the sealed batteries as for batteries with liquid electrolyte. This is to avoid electric shock, explosion of the electrolyte charging gases or hazardous electrolyte burns if the cell vessels are destroyed.

➔ PzV batteries are low gassing, but not gassing-free.

Electrolyte

The electrolyte is sulphuric acid which is fixed in gel. The density of the electrolyte cannot be measured.

5.1.1 Battery nominal data

1.	Product	Traction battery
2.	Nominal voltage	2.0 V x no. of cells
3.	Rated capacity C5	See data plate
4.	Discharge current	C5/5h
5.	Rated temperature	30 °C
	Limit temperature[1]	45°C, not permissible as operating temperature.
6.	Rated density of the electrolyte	Cannot be measured
7.	System rated electrolyte level	Cannot be measured

1. Higher temperatures shorten the useful life, lower temperatures reduce the available capacity.

5.2 Operation

5.2.1 Commissioning

Checks and operations to be performed before starting daily work

Procedure

- Make sure the battery is in physically good condition.
- Make sure the terminals are correct (positive to positive and negative to negative) and check that contacts on the battery terminal conducting system are secure.
- Check the terminal screw torques (M10 = 23 ±1 Nm) of the terminal conductors and connectors.
- Re-charge the battery.
- Charge the battery.

Check completed.

5.2.2 Discharging the battery

➔ To achieve an optimum useful life avoid operational discharges of more than 60% of nominal capacity.

➔ If the battery is discharged during operation by more than 80% of rated capacity the useful life of the battery will reduce significantly. Fully or partially discharged batteries must be re-charged immediately and not left unattended.

5.2.3 Charging the battery

⚠ WARNING!

The gases produced during charging can cause explosions

The battery gives off a mixture of oxygen and hydrogen (electrolytic gas) during charging. Gassing is a chemical process. This gas mixture is highly explosive and must not be ignited.

▶ Always disconnect the charger and truck before connecting or disconnecting the charger and battery.

▶ The charger must be adapted to the battery in terms of voltage, charge capacity and battery technology.

▶ Before charging, check all cables and plug connections for visible signs of damage.

▶ Ventilate the room in which the truck is being charged.

▶ Battery cell surfaces must remain exposed during charging in order to ensure sufficient ventilation, see truck operating instructions, chapter D, Charging the Battery.

▶ Do not smoke and avoid naked flames when handling batteries.

▶ Wherever an industrial truck is parked for charging there must be no inflammable material or consumables capable of creating sparks within a minimum distance of 2 m from the truck.

▶ Fire protection equipment must be available.

▶ Do not place any metallic objects on the battery.

▶ Always follow the safety regulations of the battery and charger station manufacturers.

NOTE

Charging the battery incorrectly can result in material damage.

Incorrect battery charging can result in overloading of the electric wires and contacts, hazardous gas formation and electrolyte leakage from the cells.

- ▶ Always charge the battery with DC current.
- ▶ All DIN 41773 charging procedures are permitted in the format approved by the manufacturer.
- ▶ Always connect the battery to a charger that is appropriate to the size and type of the battery.
- ▶ If necessary have the charger checked by the manufacturer's customer service department for suitability.
- ▶ Do not exceed limit currents in the gassing area in accordance with DIN EN 50272-3.

Charging the battery

Requirements

– Electrolyte temperature between +15°C and 35°C

Procedure

- Open or take off the tray lid or covers from the battery compartment.
- Connect the battery to the switched off charger, ensuring the terminals are connect (positive to positive and negative to negative).
- Switch on the charger.

➔ The electrolyte temperature rises by approx. 10 K during charging. If the temperatures are permanently higher than 40°C or lower than 15°C, a temperature-dependent constant voltage control of the charger is required. The adjustment factor must be applied with -0.004 V/C per K.

Battery charged

➔ *Charging is considered to be complete when the electrolyte density and battery voltage remain constant for more than 2 hours.*

Compensation charging

Compensation charging is used to ensure the useful life and maintain capacity after full discharge and repeated insufficient charging.

➔ Compensation charging should be carried out weekly.

Trickle charging

Battery trickle charging is partial charging that extends the daily application time. Higher average temperatures occur during trickle charging which can reduce the useful life of the batteries.

➔ Trickle charges should only be performed when the charge level is below 50%. Use replacement batteries instead of regular trickle charging.

➔ Avoid trickle charging with PzV batteries.

5.3 Servicing PzV and PzV-BS lead-acid batteries with sealed armour plated cells

➔ Do not add water!

5.3.1 Daily

– Charge the battery after each discharge.

5.3.2 Weekly

– Visually inspect for dirt and physical damage.

5.3.3 Every three months

– Measure and record the overall voltage.
– Measure and record the individual voltages.
– Compare the results with the previous ones.

➔ Carry out the measurements after full charging and subsequent resting for at least 5 hours.

➔ If you find significant differences compared with the previous measurements or differences between the cells, contact the manufacturer's customer service department.

5.3.4 Annually

– Measure the truck insulation resistance in accordance with EN 1175-1.
– Measure the battery insulation resistance in accordance with EN 1987-1.

➔ In accordance with DIN EN 50272-3 the battery insulation resistance should not be less than 50 Ω per volt of rated voltage.

6 Aquamatik water replenishment system

6.1 Water replenishment system design

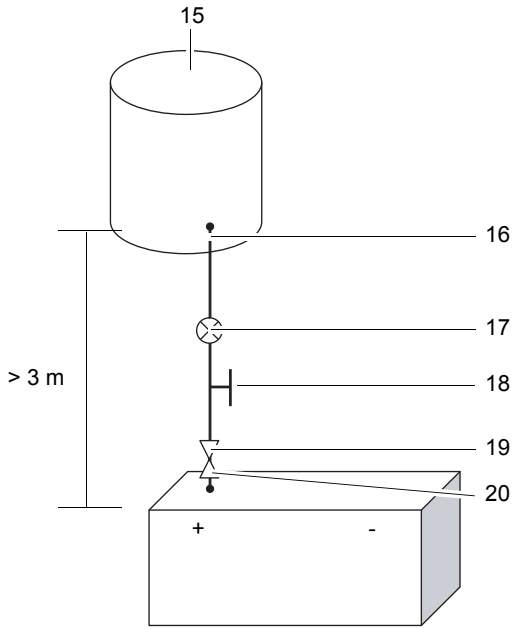

15	Water container
16	Tap connection with ball cock
17	Flow indicator
18	Shut-off cock
19	Locking coupling
20	Battery lock connector

6.2 Functional Description

The Aquamatik water replenishment system is used to adjust the rated electrolyte level automatically on traction batteries for industrial trucks.

The battery cells are interconnected through hoses and are attached to the water supply (e.g. water container) through a plug connection. When the shut-off cock is opened all the cells are filled with water. The Aquamatik plug controls the amount of water required and, at the relevant water pressures, ensures the water supply is shut off and the valve is closed securely.

The plug systems have an optical level indicator, a diagnostic port to measure the temperature and electrolyte density and a degassing port.

6.3 Adding water

Water should be added to the batteries just before the battery is fully charged. This ensures that the amount of water added is mixed with the electrolyte.

6.4 Water pressure

The water replenishment system must be operated with a water pressure in the water line of 0.3 bar - 1.8 bar. Any deviations from the permissible pressure ranges will affect the operation of the systems.

Water drop

Assembly height above battery surface is between 3 - 18 m. 1 m corresponds to 0.1 bar

Pressure water

The pressure regulating valve is adjusted to suit the system and must lie between 0.3 - 1.8 bar.

6.5 Filling time

The filling time for a battery depends on the electrolyte level, the ambient temperature and the filling pressure. Filling ends automatically. The water supply line must be disconnected from the battery when the water has been filled.

6.6 Water quality

➔ The quality of the water used to fill up electrolyte must correspond to purified or distilled water. Purified water can be produced through distillation or ion exchangers and is then suitable for the production of electrolyte.

6.7 Battery tubing

The tubing of the individual plugs is in accordance with the existing electric circuit. No changes should be made.

6.8 Operating temperature

Batteries with automatic water replenishment systems should only be stored in rooms with temperatures > 0°C, as otherwise the systems could freeze.

6.9 Cleaning measures

The plug systems must only be cleaned with purified water in accordance with DIN 43530-4. No parts of the plugs must come into contact with solvent-based materials or soap.

6.10 Service mobile vehicle

Mobile water filling vehicle with pump and filling gun to fill individual cells. The immersion pump in the container generates the necessary filling pressure. The service mobile must be at exactly the same height as the battery base.

7 Electrolyte circulation

7.1 Functional Description

Electrolyte circulation ensures the supply of air during charging to mix the electrolyte, thereby preventing any acid layer, shortening the charge time (charge factor approx. 1.07) and reducing the formation of gas during charging. The charger must be suitable for the battery and electrolyte circulation.

A pump in the charger produces the necessary compressed air which is introduced to the battery cells via a hose system. The electrolyte is circulated via the inlet air and the electrolyte density level is constant over the entire length of the electrode.

Pump

In the event of a fault, e.g. if the pressure control system responds for an unknown reason, the filters must be checked and replaced if necessary.

Battery connection

A hose is attached to the pump module which together with the charge leads is routed from the charger to the charging connector. The air is passed on to the battery via the electrolyte circulation coupling ducts in the connector. When routing make sure the hose is not bent.

Pressure monitoring module

The electrolyte circulation pump is activated when charging begins. The pressure monitoring module monitors the build up of pressure during charging. This ensures that the required air pressure is provided for electrolyte circulation charging.

In the event of malfunctions such as:

– Battery air coupling not connected to circulation module (if coupling is separate) or faulty.
– Leaky or faulty hose connections on battery or
– Intake filter contaminated

a visual error message appears on the charger.

NOTE

If an installed electrolyte circulation system is seldom used or not used at all, or if the battery is subjected to severe temperature fluctuations, the electrolyte may flow back into the hose system.

▶ Attach a separate coupling system to the air inlet line, such as: locking coupling on the battery side and through-coupling on the air supply side.

Schematic illustration

Electrolyte circulation on the battery and air supply via the charger.

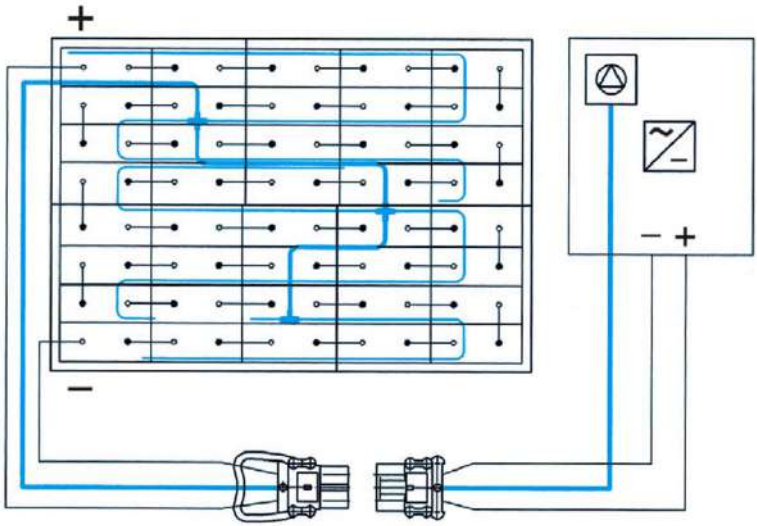

8 Cleaning batteries

Batteries and trays must be cleaned in order to

– maintain cell insulation and protect cells from ground or external conductive parts.
– Avoid damage from corrosion and stray currents.
– Avoid excessive and varying automatic discharge of the individual cells or block batteries due to stray currents.
– Avoid electric sparking due to stray currents.

When cleaning the batteries make sure that:

– The assembly site chosen for cleaning is close to a drainage system for processing the electrolytic rinsing water.
– All health and safety as well as water and waste disposal regulations are observed when disposing of used electrolyte or rinsing water.
– Protective goggles and clothing are worn.
– Cell plugs are not removed or opened.
– Clean the plastic components of the battery, in particular the cell containers, only with water or water-based cloths without any additives.
– After cleaning, the top of the battery is dried with suitable equipment, e.g. compressed air or cloths.
– Any fluid that has entered the battery box must be suctioned off and disposed of in accordance with the above-mentioned regulations.

Cleaning the battery with a high pressure cleaner

Requirements

– Cell connectors tight, plugged in securely
– Cell plugs closed

Procedure

- Follow the high pressure cleaner's user instructions.
- Do not use any cleaning additives.
- Observe the permissible cleaning device temperature setting of 140°C.

  ➔ This generally ensures that the temperature does not exceed 60°C at a distance of 30cm behind the outlet nozzle.
- Observe the maximum operating pressure of 50 bar.
- Observe a minimum distance of 30 cm from the top of the battery.
- The battery should be sprayed over its entire surface to avoid localised overheating.

  ➔ Do not clean one spot for more than 3 seconds with the jet to avoid exceeding the maximum battery surface temperature of 60°C.
- After cleaning dry the battery surface with suitable materials e.g. compressed air or cleaning cloths.

Battery cleaned.

9 Storing the battery

NOTE

The battery should not be stored for longer than 3 months without charging as otherwise it will no longer be functional.

If the battery is to be taken out of service for a long period, it should be stored fully charged in a dry room protected from frost. To ensure the availability of the battery the following charges can be selected:

– Monthly compensation charge for PzS and PzB batteries or 3-monthly full charge for PzV batteries.
– Trickle charge for a charge voltage of 2.23 volts x no. of cells for PzS, PzM and PzB batteries or 2.25 volts x no. of cells for PzV batteries.

If the battery is to be taken out of service for a long period (> 3 months), it should, as far as possible, be charged to 50% of its charge level and stored in a dry room protected from frost.

10 Troubleshooting

If any faults are found on the battery or charger, contact the manufacturer's customer service department immediately.

➔ The operations required must be carried out by the manufacturer's customer service department or a customer service organisation authorised by the manufacturer.

11 Disposal

Batteries marked with the recycling symbol and the sign showing a crossed-out rubbish bin should not be disposed of with ordinary household waste.

Buy-back terms and type of recycling are to be agreed with the manufacturer as described in § 8 of the battery legislation.