ETV C16 / C20

07.16

Operating instructions

GB

51490955

02.17

ETV C16
ETV C20

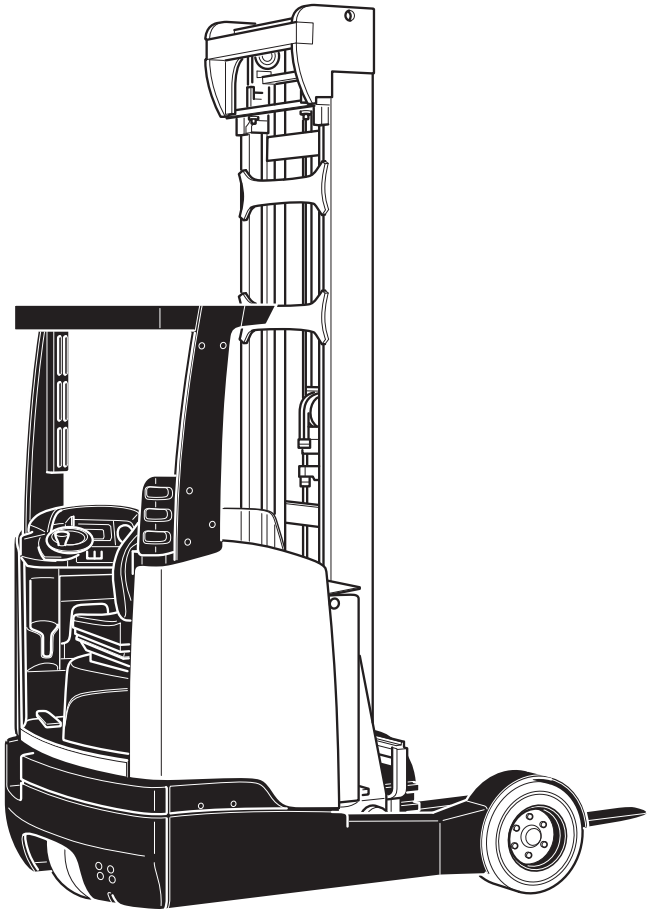

JUNGHEINRICH

Machines. Ideas. Solutions.

Declaration of Conformity

Jungheinrich AG, Friedrich-Ebert-Damm 129, 22047 Hamburg, Germany
Manufacturer or agent acting in the European Union

Model	Option	Serial no.	Year of manufacture
ETV C16 ETV C20			

Additional information

On behalf of

Date

(GB) EC Declaration of Conformity

The undersigned hereby declare that the powered industrial truck described below in detail complies with the European Directives 2006/42/EG (Machinery Directive) and 2014/30/EU (Electromagnetic Compatibility - EMC) including amendments as well as the legislative decree to incorporate the directives in national law. The signatories are in each case individually authorised to compile the technical documents.

Important notes on transporting and mounting load lifting devices to reach trucks

Transport

Depending on the overall height of the lifting mast and the local conditions transport can be performed in three different ways

– Standing, with the lifting mast mounted (for trucks with low overall height)
– Standing, with martially mounted lifting mast tilted towards the overhead guard (for trucks with medium overall height). Hydraulic line for the lifting function is interrupted.
– Standing, with the lifting mast dismounted (for trucks with large overall height)

Safety Instructions for Assembly and Commissioning

The assembly of the truck on site, commissioning the truck and instructing the driver must be carried out by personnel trained and authorised by the manufacturer

Connect the hydraulic lines to the basic machine / mast interface and commission the truck only after having installed the mast as per the instructions.

Foreword

Notes on the operating instructions

The present ORIGINAL OPERATING INSTRUCTIONS are designed to provide sufficient instruction for the safe operation of the industrial truck. The information is provided clearly and concisely. The chapters are arranged by letter and the pages are numbered continuously.

The operator manual details different industrial truck models. When operating and servicing the industrial truck, make sure that the particular section applies to your truck model.

Our trucks are subject to ongoing development. We reserve the right to alter the design, equipment and technical features of the system. No guarantee of particular features of the truck should therefore be assumed from the present operating instructions.

Safety notices and text mark-ups

Safety instructions and important explanations are indicated by the following graphics:

⚠ **DANGER!**

Indicates an extremely hazardous situation. Failure to comply with this instruction will result in severe irreparable injury and even death.

⚠ **WARNING!**

Indicates an extremely hazardous situation. Failure to comply with this instruction may result in severe irreparable injury and even death.

⚠ **CAUTION!**

Indicates a hazardous situation. Failure to comply with this instruction may result in slight to medium injury.

NOTE

Indicates a material hazard. Failure to comply with this instruction may result in material damage.

➔ Used before notices and explanations.

- ● Indicates standard equipment
- ○ Indicates optional equipment

Jungheinrich Aktiengesellschaft

Friedrich-Ebert-Damm 129
22047 Hamburg - Germany

Tel: +49 (0) 40/6948-0

www.jungheinrich.com

Contents

Appendix

JH Traction Battery Operating Instructions

These operating instructions apply only to Jungheinrich battery models. If using another brand, refer to the manufacturer's operating instructions.

A Correct Use and Application

1 General

The truck must be used, operated and serviced in accordance with the present instructions. All other types of use are beyond its scope of application and may result in damage to personnel, the industrial truck or property.

2 Correct application

NOTE

The maximum load and load distance are indicated on the capacity plate and must not be exceeded.
The load must rest on the load handler or be lifted by an attachment approved by the manufacturer.
The load must be fully raised, see page 97.

⚠ **CAUTION!**

Loss of stability can cause accidents

Extended mast sections when the truck is travelling with or without load will reduce the truck's stability.

▶ Always travel with the mast holder retracted, the mast tilted back and the load handler lowered.

The following operations are permitted:
- Lifting and lowering loads.
- Transporting lowered loads.

The following operations are prohibited:
- Travelling with a raised load (>30 cm).
- Transporting hanging loads. If the truck is to be operated with suspended loads, proof of sufficient operational stability under local operating conditions must be obtained from a specialist assessor.
- Carrying and lifting passengers[a)].
- Pushing or pulling load units on the floor.

a) Lifting passengers with a work cage may be permitted in some countries, this must be verified by the operating company.

➔ Germany: DGUV information 208-031 (BGI/GUV- 5183) Use of Working Platforms on Industrial Trucks with Mast

➔ Australia: AS 2359.1 Powered Industrial Trucks, General Requirements; AS 2359.2 Powered Industrial Trucks, Operations

3 Approved application conditions

⚠ DANGER!

Do not exceed the permissible surface and point loading on the travel lanes.
At blind spots get a second person to assist.
The driver must ensure that the loading dock /dock leveller cannot be removed or come loose during loading/unloading.

- Operation in industrial and commercial environments.
- Permissible temperature range -20°C to +40°C.
- Operation only on secure, level surfaces with sufficient capacity.
- Do not exceed the permissible surface and spot load limits on the travel routes.
- Operation only on routes that are visible and approved by the operating company.
- Negotiating inclines up to a maximum of 15 %.
- Do not travel across or at an angle on inclines. Travel with the load facing uphill.
- Operation in partially public traffic.

Ground conditions

The ground conditions must satisfy the following requirements:

- The supporting floor must comply with relevant regulations.
- The floor must be resistant to oil and grease.
- The floor insulation resistance RE must not exceed 10^6 Ω (in accordance with DIN EN1081).
- The capacity data indicated on the truck applies to floor surfaces that conform to DIN 18202 Table 3, Row 3.

⚠ WARNING!

Use under extreme conditions

Using the truck under extreme conditions can result in malfunctions and accidents.

▶ Special equipment and authorisation are required if the truck is to be constantly used in extreme conditions, especially in dusty or corrosive atmospheres.

▶ The truck cannot be used in areas at risk of explosion.

▶ In adverse weather conditions (thunder, lightning) the industrial truck must not be operated outside or in endangered areas.

➔ The permissible operating conditions change if the truck is equipped with a lithium-ion battery (○), see the manufacturer's operating instructions.

4 Proprietor responsibilities

For the purposes of the present operating instructions the “operating company” is defined as any natural or legal person who either uses the industrial truck himself, or on whose behalf it is used. In special cases (e.g. leasing or renting) the proprietor is considered the person who, in accordance with existing contractual agreements between the owner and user of the industrial truck, is charged with operational duties. The proprietor must ensure that the industrial truck is used only for the purpose it is intended for and that danger to life and limb of the user and third parties are excluded. Furthermore, accident prevention regulations, safety regulations and operating, servicing and repair guidelines must be followed. The operating company must ensure that all users have read and understood these operating instructions.

NOTE

Failure to comply with the operating instructions invalidates the warranty. The same applies if improper work is carried out on the truck by the customer or third parties without the permission of the manufacturer.

5 Adding attachments and/or optional equipment

The mounting or installation of additional equipment which affects or enhances the performance of the industrial truck requires the written permission of the manufacturer. Local authority approval may also need to be obtained.
Local authority approval however does not constitute the manufacturer’s approval.

➔ When fitting an attachment, the corresponding sticker must be applied to the control element. The sticker can be obtained from the manufacturer's customer service department.

B Truck Description

1 Application

The ETV C16 / C20 is a three-wheel electric side seat, clear view reach truck. It is designed to lift and transport goods on level surfaces. Open bottom pallets or pallets with transverse boards can be lifted inside or outside the area of the load wheels or roll cage. Loads can be stacked, unstacked and transported over long distances.

2 Truck models and rated capacity

The rated capacity depends on the model. The rated capacity can be derived from the model name.

ETV	Model name
C	Series
16/20	Rated capacity x 100 kg

The rated capacity is not generally the same as the permissible capacity. The capacity can be found on the capacity plate attached to the truck.

3 Travel direction definition

The following determinations have been made for travel direction specification:

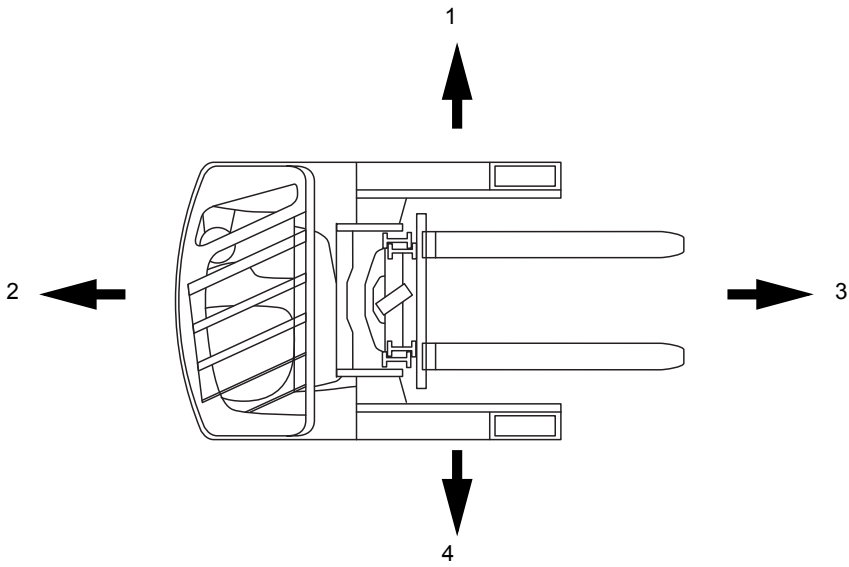

Item	Travel direction
1	Left
2	Drive direction
3	Load direction
4	Right

4 Assembly description

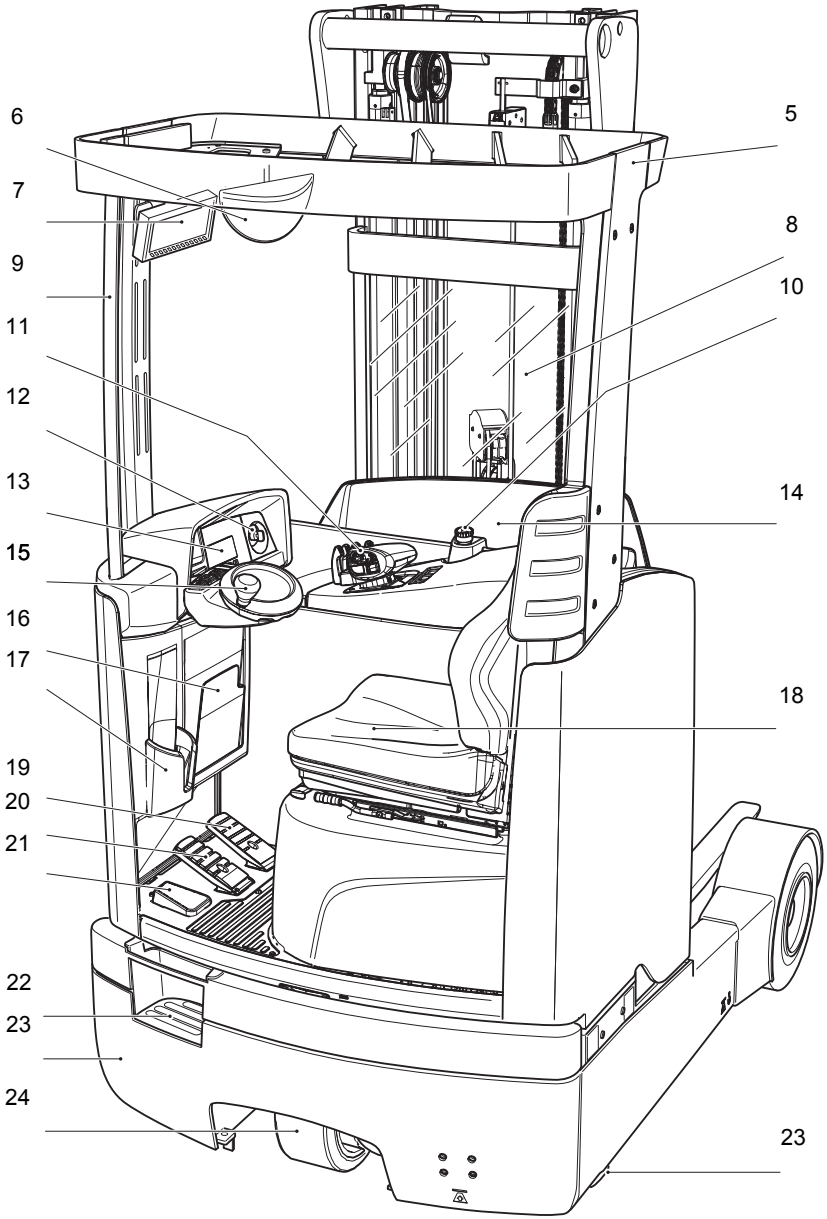

Item		Description	Item		Description
5	●	Overhead guard	14	●	Protective screen panel
6	○	Panoramic mirror	15	●	Steering wheel
7	○	Camera system	16	●	Paper compartment
8	○	Mast protective screen panel	17	●	Bottle holder
9	●	Entry grab handle	18	●	Driver's seat
10	●	Emergency disconnect switch	19	●	Accelerator pedal
11	●	soloPILOT	20	●	Brake pedal
	○	multiPILOT	21	●	Deadman switch
12	●	Key switch	22	●	Step
	○	ISM access module	23	●	Support columns
		Transponder	24	●	Drive wheel
		Keypad			
		Easy Access storage compartment			
13	●	Control and display unit			
	●	Standard equipment		○	Optional equipment

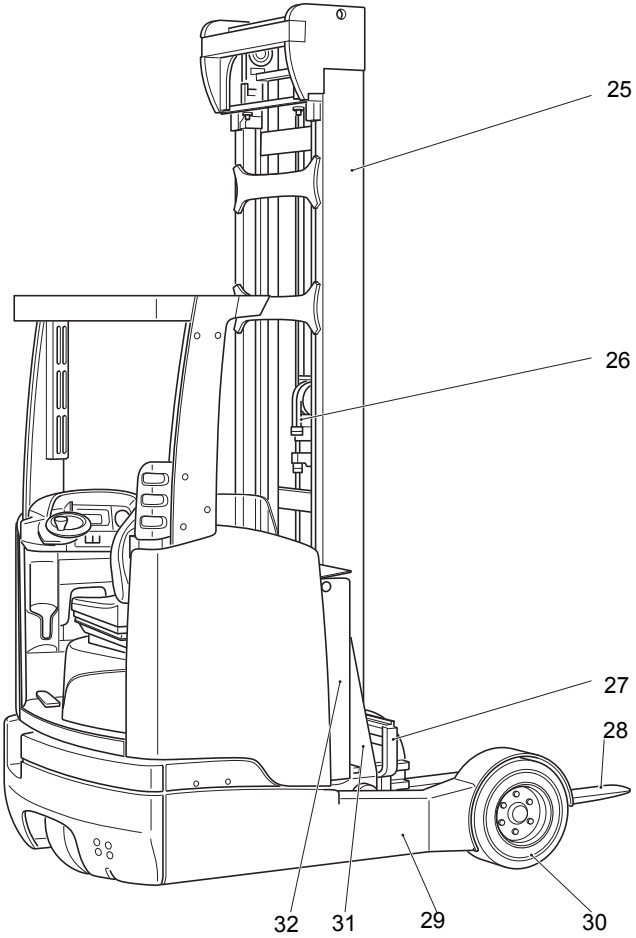

Item		Component	Item		Component
25	●	Mast	30	●	Load wheels
26	●	Free lift cylinder	31	●	Mast holder
27	●	Fork carriage	32	●	Battery compartment
28	●	Forks	29	●	Support arms
	●	Standard Equipment		○	Optional Equipment

5 Functional Description

Safety mechanisms

An enclosed truck perimeter with rounded edges ensures safe handling of the ETV C16 / C20. The driver is protected by the overhead guard (5). The drive wheel (24) and load wheels (30) are protected by a solid skirt.

➔ A slight danger remains for third parties, even when a drive wheel cover is used.

Pressing the EMERGENCY DISCONNECT switch (10) rapidly disconnects all electrical functions in hazardous situations.

Line brake safety devices in the lift cylinders limit the load lowering speed in the event of a hydraulic system failure.

Emergency Stop safety feature

If a fault is identified the Emergency Stop automatically brakes the truck until it comes to a halt. Control displays on the control and display unit indicate the Emergency Stop. Whenever the truck is switched on, the system performs a self-diagnosis which only releases the parking brake (emergency stop) if the functional test is positive.

Deadman switch

The deadman switch (21) in the left leg well must be depressed to allow the driver to operate the truck. Lifting and travel are inhibited if the driver takes his foot off the deadman switch (21). Steering and braking remain enabled. The deadman switch can be adjusted so that when the deadman switch (21) is released the parking brake applies after a set time (prevents the truck from accidentally rolling away).

Operator position

The operator position is ergonomically designed with ample legroom. To achieve the correct seated position, the driver's seat and steering head can be adjusted by the driver. The accelerator pedal and brake pedal (19, 20) are of "automotive" design.

Curve Control

Automatic speed reduction for cornering. Curve Control limits the speed and acceleration when cornering. This reduces the risk of oscillations or tipovers.

Drive system

The entire drive unit is bolted onto the chassis of the truck. A fixed AC threephase motor controls the drive wheel (24) via a bevel spur gearbox.
The electronic traction current controller ensures a smooth drive motor speed and as a result smooth start-up, powerful acceleration and electronically controlled braking with energy recovery.

Controls and displays

Controls and displays are clearly arranged in the driver's cab. The logically designed SOLO-PILOT (11) enables single handed operation of travel direction, lift/lowering, forward / reverse reach, mast tilt, sideshift left or right and auxiliary hydraulics HF5 (○).

The Easy Access option with PIN code (○) allows the truck to be switched on via the control and display unit.

Displays

Control and display unit (13) with residual time display, battery discharge indicator, lift and travel profile settings and steer angle mode display. The battery discharge indicator and hourmeter are combined on the control and display unit (13). The discharge indicator is designed as a monitor which cuts out lifting when the battery is discharged, in order to avoid depletion.

Brake system

The electric braking system consists of up to three independent braking systems. Applying the brake pedal (20) results in inversion braking (plugging) in the traction motor. If necessary the load wheel brakes can be activated via the truck's brake control system.

The parking brake is electrically released and actuated through spring pressure. The parking brake acts on the drive system. It is also used for emergency braking. A warning indicator appears when the brake is applied. Faults in the steering and brake systems (which trigger an emergency stop) are shown on the control and display unit.

Steering

Electrical steering which turns the transmission via a spur gear. The infinitely adjustable steering wheel acts as a steering transmitter. The steering can be operated in two modes.
– 180° (●)
– 360° endless (○)

A key (○) can be used to change between 180° and 360° steering.

Steering with defined knob position

When the truck is travelling straight ahead, the defined knob position always fixes the steering wheel knob at the "9 o'clock" position. The function is independent of the 180°/360° operating mode.

Electrical system

48 volt, twin cable system. Standard electronic drive, lift and steering control system. The electronic drive controller provides infinite travel speed control and allows the truck to plug when changing direction. Travel and lift parameters can be set as required via the control and display unit (13). Warning displays, operator errors and service functions can also be shown on the control and display unit.
Battery types see page 49.

Mast

The trucks are equipped with tilting telescopic clear view masts positioned in the mast holder. Adjustable side rollers and slide pieces take up the lateral pressure exerted on the fork carriage if the load is positioned on one side. The forks are fitted to the fork carriage and are adjustable. With the two-stage triplex mast (DZ) a free lift cylinder (26) initially lifts the load carriage (free lift) without changing the overall height of the truck.

Hydraulic system

The hydraulic system is driven by a pump unit with a threephase motor and a quiet running precision high pressure pump. The hydraulic system is controlled via the Solo-Pilot (11).

Mast support

The mast support is mounted on support rollers. A single telescopic reach cylinder extends and retracts the support. The mast support rails are bolted on to the outriggers (29).

Attachments

The truck can be optionally fitted with mechanical and hydraulic attachments.

6 Technical Specifications

The technical specifications comply with the German "Industrial Truck Data Sheet" Guidelines.
Technical modifications and additions reserved.

6.1 Performance data

	Description	ETV C16	ETV C20	
Q	Rated capacity	1600	2000	kg
	Travel speed with / without load	11.8 / 12.2	11.8 / 12.2	km/h
	Lift speed with / without load	0.40 / 0.70	0.32 / 0.60	m/s (±10%)
	Lowering speed with / without load	0.50 / 0.50	0.50 / 0.50	m/s (-15%)
	Traverse speed with / without load	0.2 / 0.2	0.15 / 0.15	m/s
	Gradeability with / without load	7 / 10	6 / 10	%
	Max. gradeability (5 min on-time rating) with / without load	10 / 15	10 / 15	%
	Acceleration with / without load	5.2 / 4.8	5.4 / 4.6	m/s^2
	Drive motor, output S2 60 min	7.55	7.55	kW
	Lift motor, output S3 15%	13.3	13.3	kW

6.2 Dimensions

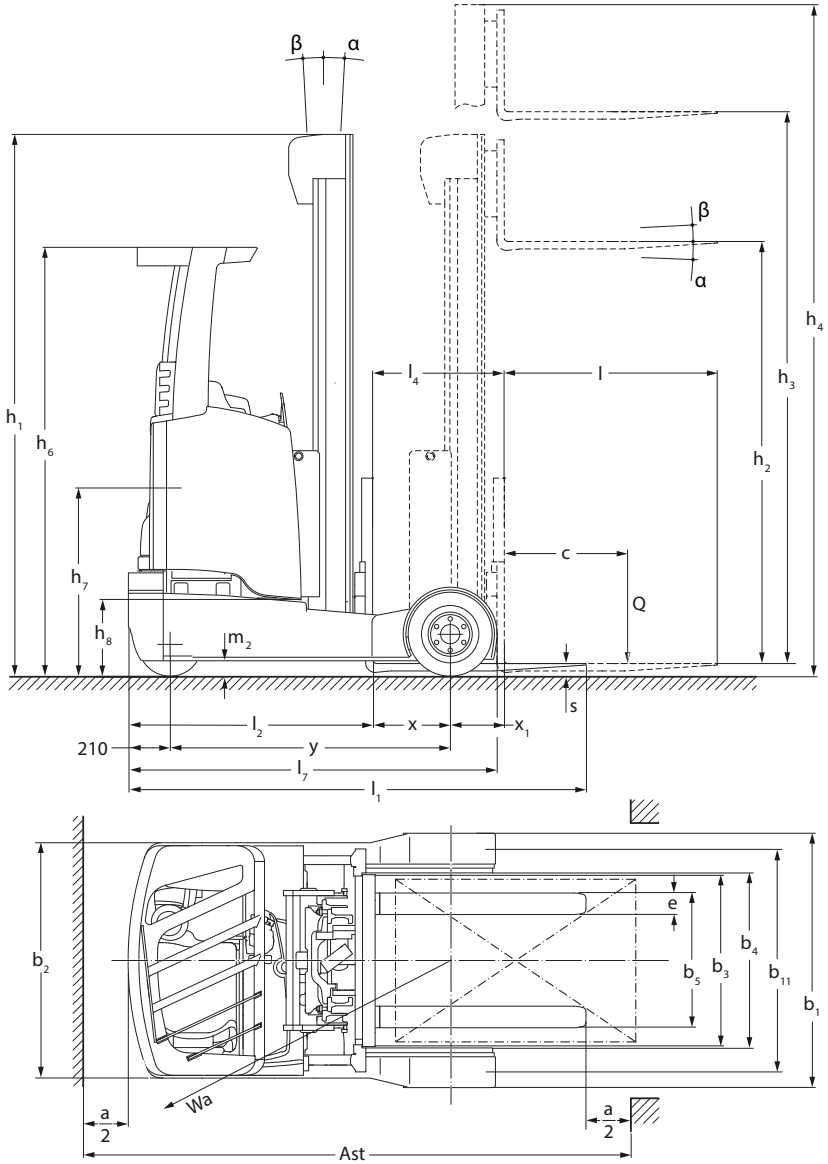

Dimensions for ETV C16/C20 with 280 Ah battery and 530 GE mast

	Component	ETV C16	ETV C20	
s/e/l	Fork dimensions	41/ 120/ 1150	50/ 140/ 1150	mm
c	Load centre distance	600	600	mm
x	Load distance, mast retracted[1]	400	421	mm
x_1	Load distance mast extended[2]	290	290	mm
y	Wheelbase	1460	1520	mm
h_6	Overhead guard height (cabin)	2250	2250	mm
h_7	Seat height / standing height	1060	1060	mm
h_8	Support arm height	464	464	mm
l_1	Overall length, with fork length 1150 mm[3]	2484	2524	mm
l_2	Length incl. fork shank [1]	1334	1374	mm
l_4	Reach[1]	690	711	mm
l_7	Length across support arms	1986	2046	mm
b_1/ b_2	Overall width	1371/1270	1400 / 1270	mm
b_3	Fork carriage width	800 / 620	800 / 620	mm
b_4	Inside straddle	940	940	mm
b_5	Width across forks (min/max)	336 / 692	356 / 712	mm
b_{11}	Track width, rear	1210	1240	mm
Wa	Turning radius	1735	1795	mm
Ast	Working aisle width [1,4] for 1000 x 1200 pallets, transverse	2784 / 2535	2829 / 2574	mm
Ast	Working aisle width [1,4] for pallets 800x1200 longit.	2829 / 2735	2871 / 2774	mm
m_2	Ground clearance at lowest point / centre wheelbase	55 / 80	55 / 80	mm
a/b l	Mast tilt, fwd./back	2/4		°
	Net weight see truck data plate			

1. Different battery sizes and masts will affect this value
2. ETV C16 with 560 Ah battery = 205 mm
3. Different battery sizes, masts and fork lengths will affect this dimension.
4. Second dimension applies to floor storage.

6.2.1 Standard mast version dimensions

	Component	Two stage Triplex mast (DZ)		
		ETV C16	ETV C20	
h_1	Mast height retracted	2300	2400	mm
h_2	Free lift	1656	1670	mm
h_3	Lift	5300	5300	mm
h_4	Mast height extended	5944	5300	mm

6.3 Weights

Weights for ETV C16/C20 with 560 Ah battery and 530 DZ mast

Component	ETV C16	ETV C20	
Net weight incl. battery	3640	4010	kg
Axle loading, w.o. load front/rear	2230 / 1410	2410 / 1600	kg
Axle loading with forks extended, load front / rear	670 / 4570	510 / 5500	kg
Axle loading with forks retracted, load front / rear	1965 / 3275	2146 / 3846	kg

6.4 Tyre type

Component	ETV C16	ETV C20	
Tyre size, front (drive wheel)	180 / 60-10	200 / 50-10	mm
Tyre size, rear (load wheels)	180 / 60-10	200 / 50-10	mm
Wheels, number front / rear (x = driven)	1x/2	1x/2	

6.5 Battery

Approved battery types see page 49.

6.6 Hydraulics

Component	ETV C16	ETV C20	
Available working pressure for attachments	150	150	bar
Oil flow for attachments	20	20	l/min

6.7 Mast weights

The weight of the mast can be calculated using the formulae given below. The necessary details such as truck name, model and length of the extended mast (lift height) can be taken from the data plate. The weight of the truck and the battery can be found on the data plate.

6.7.1 Mast weight calculation example

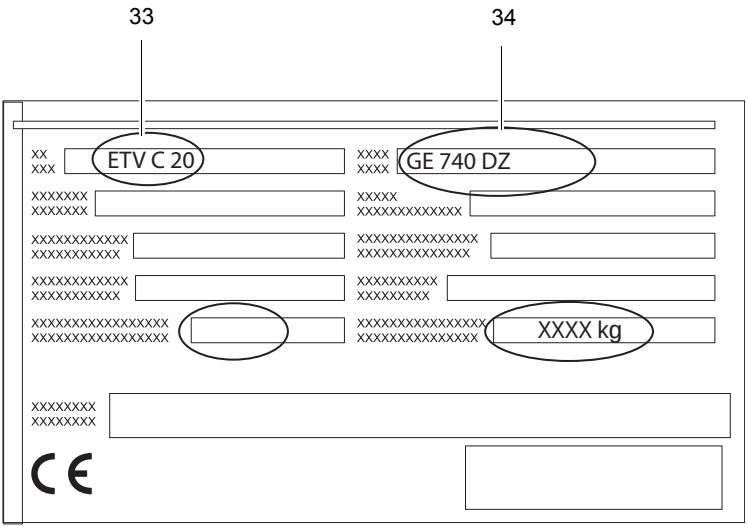

– Truck name (33): ETV C20
– Mast (34): DZ
– Mast weight = 1.0 x lift height (34) + 415 kg
– Mast weight = 1.0 * 740 + 415 kg = 1155 kg

6.7.2 Overview of formulae to be applied

Truck series	Design	Calculation
ETV C16	GE DZ	Weight = 0.78 x lift height + 339 kg
ETV C20	GE DZ	Weight = 1.0 x lift height + 415 kg

6.8 EN norms

Continuous sound pressure level

– ETV C16 / C20: 64 dB(A)

in accordance with EN 12053 as harmonised with ISO 4871.

➔ The continuous sound pressure level is calculated according to standard procedures and takes into account the sound pressure level when travelling, lifting and idling. The sound pressure level is measured at the operator's ear.

– ETV C16 MSG 20: 0.78 m/s²
– ETV C20 MSG 20: 0.77 m/s²

➔ The internal accuracy of the measuring chain for at 21°C at ± 0,02 m/s². Further deviations may occur in particular through the positioning of the sensor and different driver weights.

Electromagnetic compatibility (EMC)

The manufacturer confirms that the truck adheres to the limits for electromagnetic emissions and resistance as well as the static electricity discharge test in accordance with EN 12895 as well as the standardised instructions contained therein.

➔ No changes to electric or electronic components or their arrangement may be made without the written agreement of the manufacturer.

⚠ **WARNING!**

Medical equipment can be damaged by non-ionised radiation
Electrical equipment on the truck emitting non-ionised radiation (e.g. wireless data transmission) can affect operators' medical equipment (pacemakers, hearing aids etc.) and result in malfunctions. Consult a doctor or the manufacturer of the medical equipment to clarify whether it can be used near the industrial truck.

6.9 Conditions of use

Ambient temperature

– During operation -20°C to +40°C

➔ Special equipment and authorisation are required if the truck is to be used continually in conditions of extreme temperature fluctuations or condensing air humidity.

➔ Special equipment and authorisation are required if the truck is to be constantly used in 0°C.

6.10 Electrical Requirements

The manufacturer certifies compliance with the requirements for the design and manufacture of electrical equipment, according to EN 1175 "Industrial Truck Safety - Electrical Requirements", provided the truck is used according to its purpose.

7 Identification Points and Data Plates

7.1 Overview of marking points

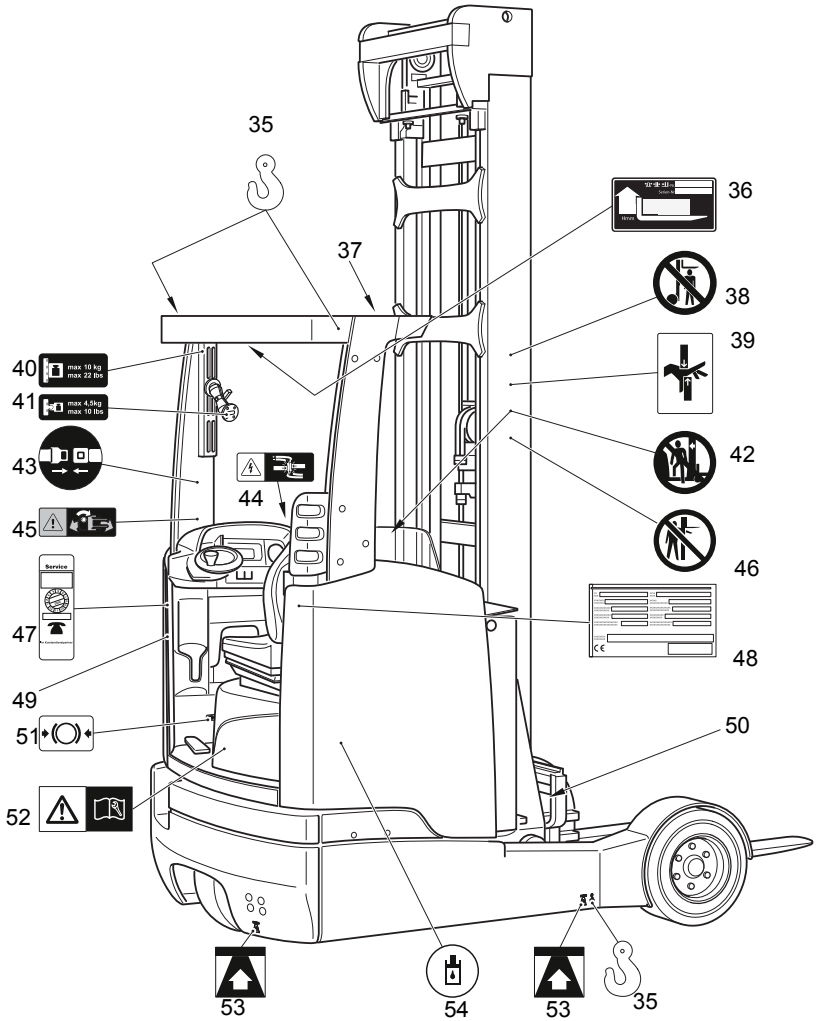

40

41

⚠ CAUTION!

Overload through bolt-on components

M device and universal joints can only withstand the weights indicated on the capacity plates.

▶Note the maximum weights for M device (40) and universal joints (41).

Item	Description
35	Attachment points for loading by crane
37	"Final inspection completed" label
36	Capacity plate
38	Prohibition plate: "No standing under the load handler"
39	"Trapping hazard" warning notice
40	"M device max. 10 kg (22 lb)" capacity warning notice (○)
41	"Universal joints max. 4.5 kg (10 lb)" capacity warning notice (○)
43	Wear seat belt (○)
42	Prohibition plate: “Do not step into the reach mechanism”
44	"Damaged battery cables are hazardous" warning notice
45	Travel direction, steering wheel angle, synchronous steering (○)
46	Prohibition plate: "Do not reach through the mast"
47	Inspection plaque (○)
48	Truck data plate
49	Overview of electronic component part numbers
50	Serial no. Truck
51	Brake pedal plate
52	Attention: Read operating instructions!
54	"Add hydraulic oil" notice
53	Jack attachment points (both support arms)

7.2 Data plate

The illustration shows the standard version for EU member states. The data plate may differ in other countries.

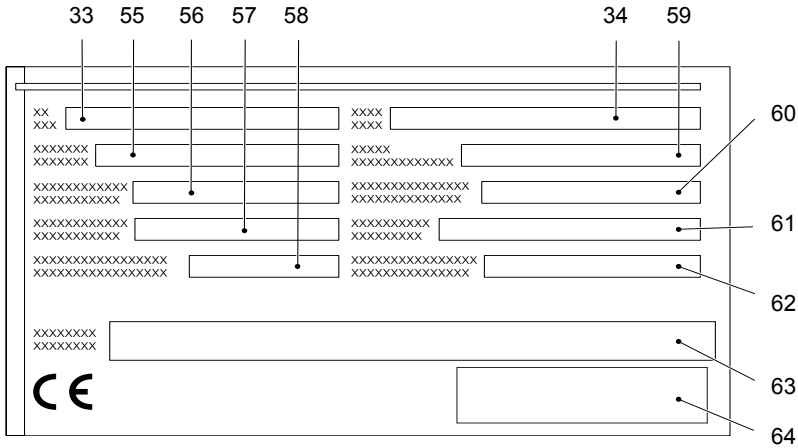

Item	Description	Item	Description
33	Type	59	Year of manufacture
55	Serial number	60	Load centre distance (mm)
56	Rated capacity (kg)	61	Nominal power
57	Battery voltage (V)	62	Min./max. battery weight (kg)
58	Net weight without battery (kg)	63	Manufacturer
34	Option	64	Manufacturer's logo

For queries regarding the truck or ordering spare parts, always quote the serial number (55).

7.2.1 Serial number position

The serial number is located on the traverse wall at the bottom left of the battery compartment (50), see page 32.

7.3 Truck load chart

7.3.1 Capacity plate

The capacity plate (36) gives the capacity (Q) of the truck in kg for a vertical mast. The maximum capacity is shown as a table with a standard load centre of gravity distance * C (in mm) and the required lift height H (in mm). The arrow shape markings (65) on the inner and outer masts show the driver when the specified lift limits have been reached.

*)The standard load centre of gravity distance takes into account the width as well as the height of the load.

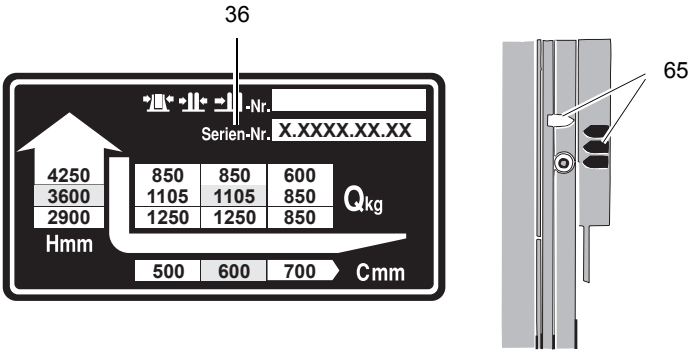

Example of how to calculate the maximum capacity

With a load centre of gravity distance C of 600 mm and a maximum lift height H of 3600 mm the max. capacity Q is 1105 kg.

7.3.2 Attachment load chart

The attachment capacity plate is next to the truck's capacity plate and gives the truck’s capacity Q (in kg) in conjunction with the respective attachment. The serial number for the attachment indicated on the capacity plate must match the data plate of the attachment.

➔ For loads with a centre of gravity above 600 mm (measured from the top of the forks), the capacities are reduced by the difference of the altered centre of gravity.

7.3.3 Sideshifter capacity plate

The capacity plate (66) gives the reduced capacity Q (in kg) when the sideshift is extended.

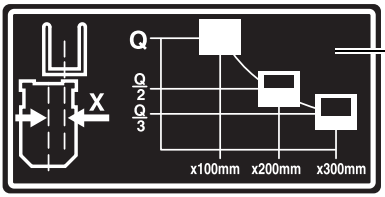

66

7.3.4 Jack contact points

The "Jack contact point" decal (53) indicates where the truck may be lifted and jacked up (see page 161)

53

8 Stability

The truck's stability has been tested according to latest technological standards. These take into account the dynamic and static tipover forces that can occur if used correctly.

Stability can also be affected by the following factors:
– Battery size and weight
– Tyre type
– Mast
– Attachment
– Transported load (size, weight and centre of gravity)
– Ground clearance, e.g. modification of the support columns
– Position of the mast holder stops

Changing the components can alter the stability.

Batteries that are pushed forward or unlocked can alter the stability.

8.1 Wind loads

Wind forces can affect the stability of a truck when lifting, lowering and transporting loads with large surface areas.

Light loads must be especially secured when they are subjected to wind forces. This will prevent the load from sliding or falling.

Stop the truck in both cases.

C Transport and Commissioning

1 Transport

Depending on the height of the mast and local conditions, the truck can be transported in three different ways:

– Vertically, with the mast assembled (for low heights)
– Vertically, with the mast partially assembled and leaning against the overhead guard (for medium heights), lifting hydraulic line disconnected.
– Horizontally, with the mast dismantled (for large heights), all mechanical connections and hydraulic lines between the basic truck and the mast separated.

Safety instructions for assembly and commissioning

⚠ WARNING!

The assembly of the truck at the application site, commissioning and driver training must only be performed by the manufacturer's customer service representatives who have been specially trained for these tasks.

The hydraulic lines may only be connected to the basic truck / mast interface and the truck commissioned when the mast has been properly assembled.

Attachment points for the mast assembly

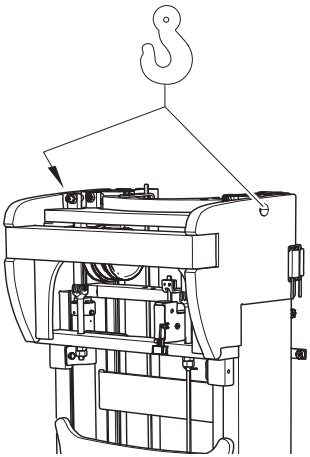

2 Lifting by crane

⚠ WARNING!

Improper loading by crane can result in accidents

Improper use or use of unsuitable lifting gear can cause the truck to crash when being loaded by crane.

Prevent the truck from hitting other objects during lifting, and avoid uncontrolled movements. If necessary, secure the truck with guide ropes.

- ▶ The truck may be loaded only by people who are trained in using lifting accessories and lifting gear.
- ▶ Wear personal protective equipment (e.g. safety shoes, safety helmet, hi-vis jacket, protective gloves) when loading by crane.
- ▶ Do not stand under suspended loads.
- ▶ Do not walk into or stand in a hazardous area.
- ▶ Always use lifting gear with sufficient capacity (for truck weight, see truck data plate).
- ▶ Always attach the crane lifting gear to the prescribed attachment points and prevent them from slipping.
- ▶ Use the lifting accessories only in the prescribed load direction.
- ▶ Crane lifting gear must be fastened in such a way that it does not come into contact with any attachments when lifting.

2.1 Lifting the truck by crane

⚠ CAUTION!

The mast can get damaged

- ▶ Loading by crane is only intended for the initial transport before the truck is used for the first time.
- ▶ Loading must be carried out by specially trained staff in accordance with recommendations contained in Guidelines VDI 2700 and VDI 2703

⚠ DANGER!

Crane slings can tear, resulting in accidents

- ▶ Only use crane lifting gear with sufficient capacity.
- ▶ Loading weight = Net weight of truck (+ battery weight for electric trucks).
- ▶ The mast must be tilted back fully.
- ▶ The crane lifting gear on the mast must have a minimum clear length of 2 m.
- ▶ Crane slings should be fastened in such a way that they do not come into contact with any attachments or the overhead guard when lifting.
- ▶ Do not stand under a swaying load.
- ▶ The truck should only be handled by people who are trained in using lifting slings and tools.
- ▶ Wear safety shoes when lifting the truck by crane.
- ▶ Do not walk into or stand in a hazardous area.
- ▶ Always attach the crane lifting gear to the prescribed strap points and prevent them from slipping.

Lifting the truck by crane

Requirements

– Truck parked securely, see page 111.

Tools and Material Required

– Crane lifting gear
– Lifting slings
– Wedges

Procedure

- Route rope slings around the two strap points (67) of the overhead guard strut.
- Secure crane lifting gear to the two strap points (68) on the wheel arms.
- Load the truck.
- Park the truck securely, see page 111.
- Secure the truck with wedges to prevent it from rolling away.

The truck is now loaded.

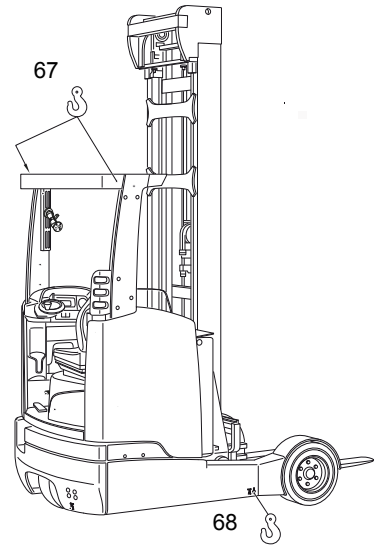

Lifting the truck and cab by crane

Requirements

– Truck parked securely, see page 111.

Tools and Material Required

– Sufficiently wide cross member
– Crane lifting gear with hook
– Wedges

Procedure

- Secure the cranes lifting gear to the strap points (69).

➔ The lifting of trucks with a weather-proof cab (○) is subject to restrictions. Because of the risk to the window, the crane lifting gear and rope slings must not pass over the front door.

- Load the truck.
- Park the truck securely, see page 111.
- Secure the truck with wedges to prevent it from rolling away.

The truck is now loaded.

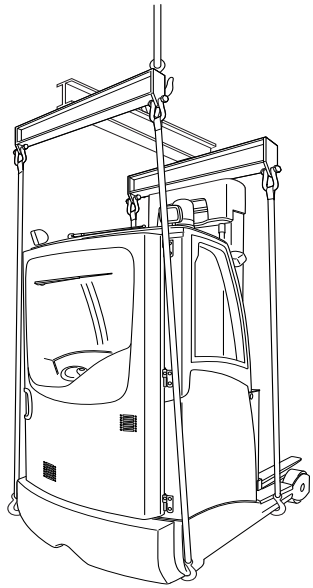

69

3 Securing the truck during transport

⚠ WARNING!

Accidental movement during transport

Improper fastening of the truck and mast during transport can result in serious accidents.

- ▶ Loading must only be performed by specialist personnel trained for this purpose. The specialist personnel must be instructed in securing loads on road vehicles and handling load securing devices. In each case correct measurements must be taken and appropriate safety measures applied.
- ▶ The truck must be securely fastened when transported on a lorry or a trailer.
- ▶ The lorry or trailer must have fastening rings.
- ▶ Use wedges to prevent the truck from moving.
- ▶ Use only fastening belts with sufficient strength.
- ▶ Use non-slip materials to securing the load aids (pallet, wedges, ...) e. g. non-slip mats.

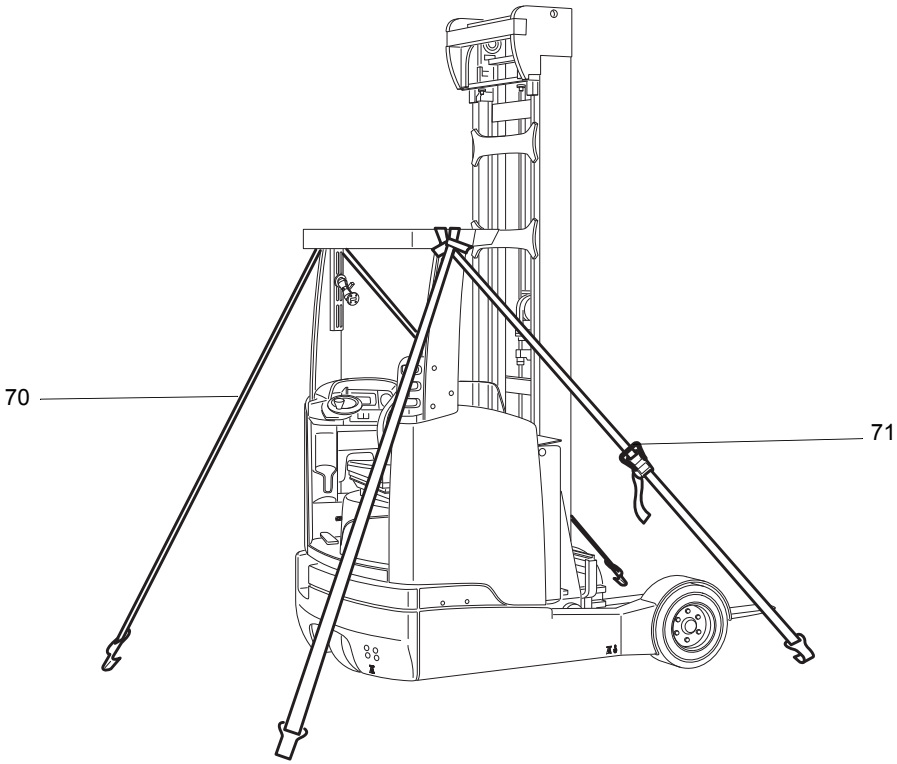

Securing the industrial truck for transport

Requirements

– 2 tensioning belts

Procedure

- Pull the tensioning belts (70) through the overhead guard over the strut.
- Secure the tensioning belts (70) to the fastening rings.
- Tighten the tensioning belts (70) with the tensioner (71).

The truck is now secured for transport.

4 Using the Truck for the First Time

⚠ WARNING!

Incorrect assembly can result in accidents

The assembly of the truck at the application site, commissioning and operator training must only be performed by the manufacturer's customer service representatives who have been specially trained for these tasks.

▶ The hydraulic lines may only be connected to the basic truck / mast interface when the mast has been properly assembled.

▶ Only then can the truck be started.

▶ If several trucks have been delivered, make sure that the serial numbers of the load handlers, masts and basic trucks always match.

⚠ WARNING!

The use of unsuitable energy sources can be hazardous

Rectified AC current will damage the assemblies (controllers, sensors, motors etc.) of the electronic system.

Unsuitable cable connections (too long, insufficient wire cross-section) to the battery (tow cables) can overheat, setting the truck and battery on fire.

▶ The truck must only be operated with battery current.

▶ Cable connections to the battery (tow leads) must be less than 6 m long and have a minimum cross-section of 50 mm².

Procedure

- Check the equipment is complete.
- If necessary, install the battery, see page 56. Do not damage the battery cable.
- Charge the battery, see page 54.

  ➔ The truck settings must match the battery model (if the customer is charging the battery).
- Check the hydraulic oil level and top up if necessary (see page 173).
- Start up the truck (see page 85).

Truck is operational.

Wheel flattening

If the truck has been parked for a long period, the wheel surfaces may tend to flatten. This flattening has a negative effect on the safety and stability of the truck. Once the truck has covered a certain distance, the flattening will disappear.

D Battery - Servicing, Recharging, Replacement

➔ For use of lithium-ion batteries (○), see the manufacturer's operating instructions.

1 Safety Regulations Governing the Handling of Lead-Acid Batteries

Maintenance personnel

Batteries may only be charged, serviced or replaced by trained personnel. These operating instructions and the manufacturer’s instructions concerning batteries and charging stations must be observed when carrying out the work.

Fire Protection

Do not smoke and avoid naked flames when handling batteries. Wherever an industrial truck is parked for charging there must be no inflammable material or consumables capable of creating sparks within a minimum distance of 2 m from the truck. The room must be ventilated. Fire protection equipment must be available.

⚠ **CAUTION!**

The use of unsuitable fire protection equipment can result in scalding

Extinguishing fires with water can cause a reaction with the battery acid. This can result in scalding from the acid.

▶ Use powder extinguishers.

▶ Never extinguish a burning battery with water.

Battery maintenance

The battery cell covers must be kept dry and clean. Terminals and cable shoes must be clean, lightly greased with terminal grease and must be securely tightened. Batteries with non insulated terminals must be covered with a non slip insulating mat.

⚠ **CAUTION!**

When retracting the battery cover make sure that the battery cable cannot be damaged. Damaged cables can result in short circuits.

Battery disposal

Batteries may only be disposed of in accordance with national environmental protection regulations or disposal laws. The manufacturer’s disposal instructions must be observed.

1.1 General notes on handling batteries

⚠ WARNING!

Batteries can be hazardous

Batteries contain an acid solution which is poisonous and corrosive. Avoid contact with battery acid at all times.

- ▶ Dispose of used battery acid in accordance with regulations.
- ▶ Always wear protective clothing and goggles when working with batteries.
- ▶ Do not let battery acid come into contact with skin, clothing or eyes. If necessary, rinse with plenty of clean water.
- ▶ In the event of physical damage (e.g. skin or eye contact with battery acid) call for a doctor immediately.
- ▶ Spilled battery acid should be neutralised immediately with plenty of water.
- ▶ Only batteries with a sealed battery container may be used.
- ▶ Follow national guidelines and legislation.

⚠ WARNING!

Unsuitable batteries that have not been approved by Jungheinrich for the truck can be hazardous

The design, weight and dimensions of the battery have a considerable effect on the operational safety of the truck, in particular its stability and capacity. The use of unsuitable batteries that have not been approved for the truck by Jungheinrich, can lead to a deterioration of the braking characteristics of the truck during energy recovery, causing considerable damage to the electric controller and resulting in serious danger to the health and safety of individuals.

- ▶ Only Jungheinrich-approved batteries may be used on the truck.
- ▶ Battery equipment may only be replaced with the agreement of Jungheinrich.
- ▶ When replacing/installing the battery make sure the battery is securely located in the battery compartment of the truck.
- ▶ Do not use batteries that have not been approved by the manufacturer.

Park the truck securely before carrying out any work on the batteries (see page 111).

2 Battery types

⚠ CAUTION!

Always use batteries with insulated covers or live components.

The battery weights are indicated on the battery data plate.

The truck will be equipped with different battery models, depending on the application. The following table shows which combinations are included as standard:

Battery type	Capacity	Performance-enhanced	Weight [kg][1]
48 V - 4 PzS	560 Ah	620 Ah	970
48 V - 5 PzS	700 Ah	775 Ah	1170
48 V LiB 360 MH	360 Ah	-	970/1210
48 V LiB 480 MH	480 Ah	-	970/1210

1. Tolerance +/- 5%

3 Exposing the battery

⚠ CAUTION!

Moving parts can cause accidents

The mast moves when the battery is exposed. This constitutes a risk of accidents and trapping in the hazardous area.

▶ Instruct any persons to leave the hazardous area.

▶ Make sure there is nothing between the battery and the mast holder when you move the mast holder.

NOTE

Trapped battery cables can cause damage

When the battery is inserted the battery cable can be damaged if fitted without a cable duct.

▶ Always install the battery with a cable duct (72).

▶ The cable duct (72) must match the battery used. The battery cable length depends on the battery type.

▶ Contact the manufacturer's service department when replacing the factory-fitted battery.

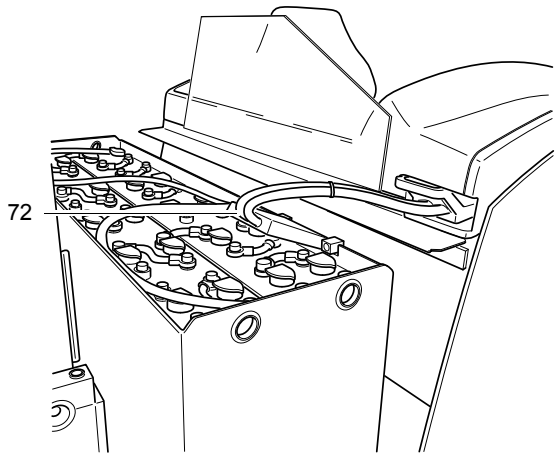

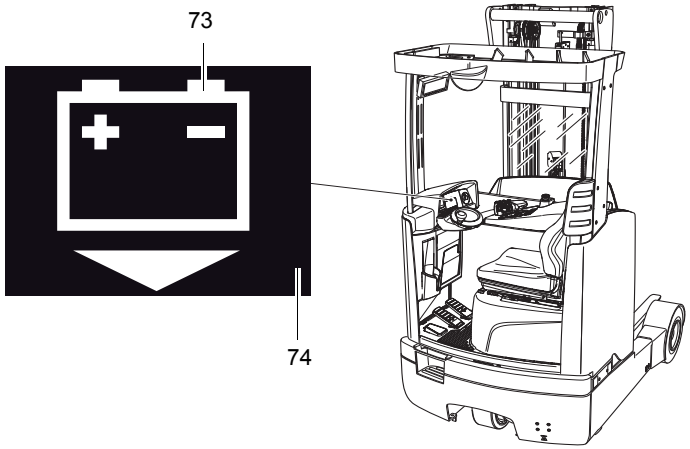
73
74

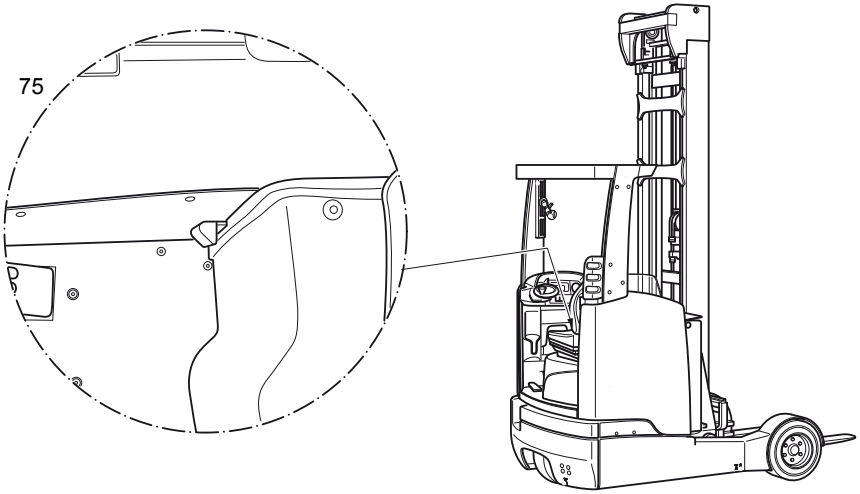
75

Exposing the battery

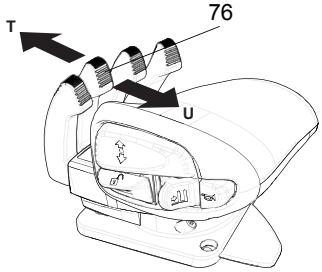

Requirements

– Truck prepared for operation, see page 76.

Procedure

- Press the battery unlock button (74) button until the battery trolley reaches its unlocking position.
- Release the battery unlock button pedal (74).
- Press the battery unlock pedal (75) with your right foot and hold it in this position.

➔ The “battery unlocked” button (73) lights up on the display unit.

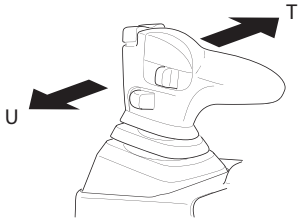

- Move the SOLO-PILOT lever (76) in the direction of the arrow (T) and extend the mast support with the coupled battery trolley until the battery is exposed for maintenance.
- Release the battery unlatch pedal (75).
- Turn the Emergency Disconnect switch and key switch off.

➔ The battery unlatch safety switch only allows for travel at crawl speed if the battery trolley is unlatched and the indicator (73) is still on. Before starting up the truck again, the battery trolley must be restored to its initial position in order to uncouple the battery trolley and the mast support. The indicator (73) must be off

The battery is exposed.

Battery retracted

Requirements

– Truck prepared for operation, see page 76.
– Battery exposed.

Procedure

• Pull the SOLO-PILOT lever (76) in the direction of the arrow (U) and retract the mast holder.

➔ The “battery unlocked” (red graphic symbol) (73) goes out on the display unit.

➔ The battery unlatch safety switch only allows for travel at crawl speed if the battery trolley is unlatched and the indicator (73) is still on. Before starting up the truck again, the battery trolley must be restored to its initial position in order to uncouple the battery trolley and the mast support. The indicator (73) must be off

The battery is now retracted.

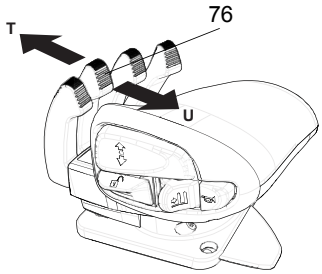

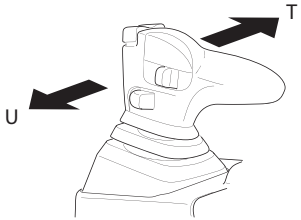

4 Charging the battery

⚠ WARNING!

The gases produced during charging can cause explosions

The battery produces a mixture of oxygen and hydrogen (electrolytic gas) during charging. Gassing is a chemical process. This gas mixture is highly explosive and must not be ignited.

- ▶ Switch the charging station and truck off first before connecting/disconnecting the charging cable of the battery charging station to/from the battery connector.
- ▶ The charger must be adapted to the battery in terms of voltage and charge capacity.
- ▶ Before charging, check all cables and plug connections for visible signs of damage.
- ▶ Ventilate the room in which the truck is being charged.
- ▶ The battery cell surfaces must be exposed during charging to ensure adequate ventilation.
- ▶ Do not smoke and avoid naked flames when handling batteries.
- ▶ Wherever an industrial truck is parked for charging there shall be no inflammable material or lubricants capable of creating sparks within 2 m around the truck.
- ▶ Fire protection equipment must be on hand.
- ▶ Do not lay any metallic objects on battery.
- ▶ It is essential to follow the safety regulations of the battery and charger station manufacturers.

Charge the battery

Requirements

– Battery exposed, see page 50.
– Remove any insulating mats from the battery.

Procedure

- Connect the charger lead of the battery charger station with the battery connector.
- Charge the battery in accordance with the battery and charging station manufacturers' instructions.

Battery is charged.

⚠ WARNING!

Risk of accidents and injuries when handling lithium-ion batteries.

Improper use can result in overheating, fire or a battery explosion.

- ▶ Do not expose the lithium-ion battery for charging.
- ▶ Observe the operating instructions for charging the lithium-ion battery.
- ▶ Do not use the lithium-ion battery cable for charging. The battery cable is permanently connected to the truck.
- ▶ Do not place any metallic objects on the lithium-ion battery.
- ▶ The battery charger must comply with national regulations.

Procedure

- Connect the charger cable of the deactivated charger to the battery connection (77).
- Switch on the battery charger.
- The lithium-ion battery is charged, see the manufacturer's operating instructions.
  The battery is charging.

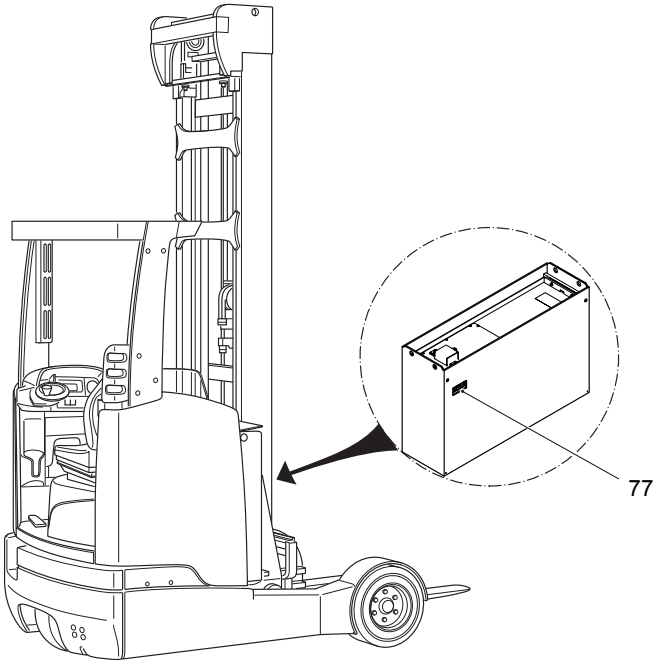

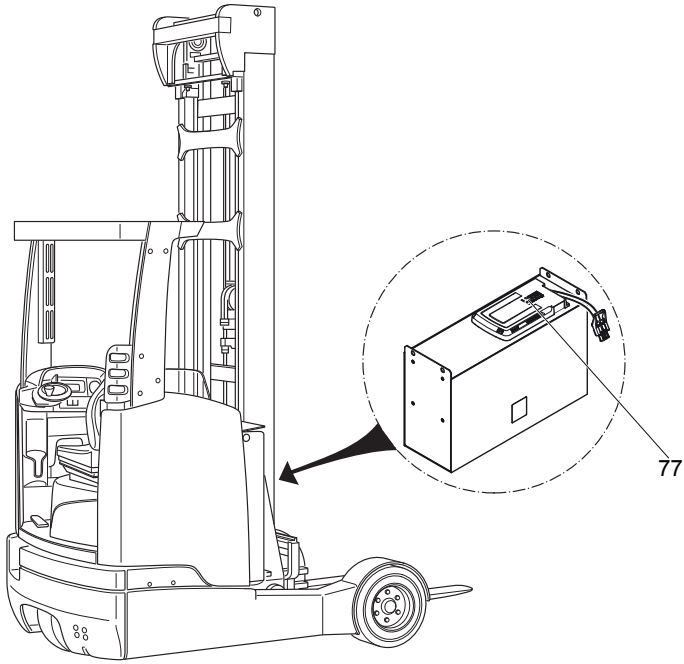

5 Battery removal and installation

⚠ WARNING!

Accident risk during battery removal and installation

Due to the battery weight and acid there is a risk of trapping or scalding when the battery is removed and installed.

- ▶ Note the "Safety regulations for handling acid batteries" section in this chapter.
- ▶ Wear safety shoes when removing and installing the battery.
- ▶ Use only batteries with insulated cells and terminal connectors.
- ▶ Park the truck on a level surface to prevent the battery from sliding out.
- ▶ Make sure the crane slings have sufficient capacity to replace the battery.
- ▶ Use only approved battery replacement devices (battery roller stand, replacement trolley etc.).
- ▶ Make sure the battery is securely located in the truck's battery compartment.

⚠ CAUTION!

Risk of accidents and injury from electrical voltage

When installing and removing the lithium-ion battery, there is a risk of accidents and injury from electrical voltages.

- ▶ The lithium-ion battery may only be installed and removed by trained experts.

5.1 Removing the battery

Removing the battery

Requirements

– Battery exposed, see page 50.

Tools and Material Required

– Crane lifting gear

Procedure

- Loosen the jam nut (78) on the battery lock (80).
- Undo the retaining screw (76).
- Pull out the battery stop (80).
- Remove the battery cover.
- Strap the crane lifting gear to both sides of the battery container.

  ➔ The hooks must be fitted in such a way that when the crane lifting gear is slackened, they do not fall onto the battery cells. The lifting gear must exert a vertical pull so that the battery container is not compressed.
- Lift the battery clear and move out to the side.

The battery is now removed.

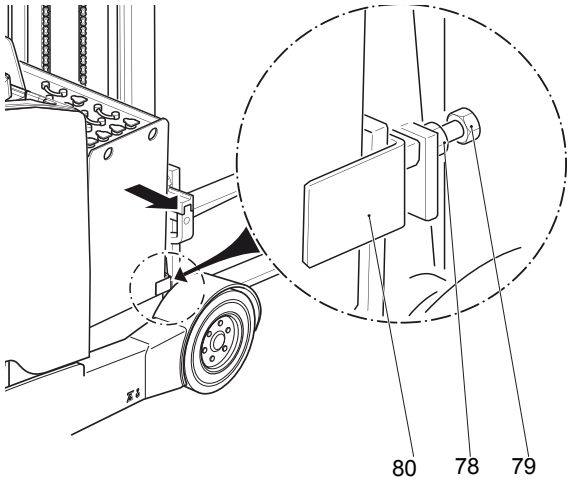

Removing the battery with the battery trolley

Requirements

– Battery exposed, see page 50.

Tools and Material Required

– Battery trolley

Procedure

⚠ CAUTION!

An unsecured battery can result in accidents

When the battery stop (80) is removed, the battery can roll out if the truck is not horizontal.

▶Park the truck on a horizontal surface.

- Release the handle (○) (79).
- Pull out the battery stop (80).
- Remove the battery cover.
- Pull the battery out to the side onto the battery trolley.

The battery is now removed.

5.2 Battery installation

NOTE

Trapped battery cables can cause damage

When the battery is inserted the battery cable can be damaged if fitted without a cable duct.

▶ Always install the battery with a cable duct (72).

▶ The cable duct (72) must match the battery used. The battery cable length depends on the battery type.

▶ Contact the manufacturer's service department when replacing the factory-fitted battery.

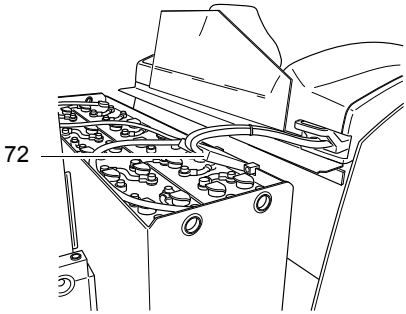

Battery installation

Requirements

– Battery removed.
– Battery cover removed.

Tools and Material Required

– Crane lifting gear

Procedure

- Strap the crane lifting gear to both sides of the battery container.
- Lift the battery with the crane lifting gear, lift it in from the side and lower it.
- Insert the battery stop (80).
- Tighten the retaining screw (76) and jam nut (78) or handle (79) on the battery stop (80).
- Attach the battery connector to the truck connector.
- Fit the battery cover.

The battery is now assembled.

Installing the battery with the battery trolley

Requirements

– Battery removed.
– Battery cover removed.

Tools and Material Required

– Battery trolley

Procedure

- Bring the battery trolley with the battery up to the truck.
- Push the battery off the trolley into the battery compartment.
- Insert the battery stop (80).
- Tighten the retaining screw (76) and jam nut (78) or handle (79) on the battery stop (80).
- Attach the battery connector to the truck connector.
- Fit the battery cover.

The battery is now installed.

E Operation

1 Safety Regulations for the Operation of Forklift Trucks

Driver authorisation

The truck may only be used by suitably trained personnel, who have demonstrated to the proprietor or his representative that they can drive and handle loads and have been authorised to operate the truck by the proprietor or his representative.

Operator's rights, obligations and responsibilities

The operator must be informed of his duties and responsibilities and be instructed in the operation of the truck and shall be familiar with the operating instructions.

Unauthorised use of truck

The operator is responsible for the truck during the time it is in use. The operator must prevent unauthorised persons from driving or operating the truck. Do not carry passengers or lift other people.

Damage and faults

The supervisor must be informed immediately of any damage or faults to the truck or attachment. Trucks which are unsafe for operation (e.g. wheel or brake problems) must not be used until they have been rectified.

Repairs

The operator must not carry out any repairs or alterations to the truck without authorisation and the necessary training to do so. The operator must never disable or adjust safety mechanisms or switches.

Hazardous area

⚠ WARNING!

Risk of accidents/injury in the hazardous area of the truck

A hazardous area is defined as the area in which people are at risk due to travel or lifting operations of the truck, its load handler or the load. This also includes the area within reach of falling loads or lowering/falling operating equipment.

- ▶ Instruct unauthorised persons to leave the hazardous area.
- ▶ In case of danger to third parties, give a warning signal in good time.
- ▶ If unauthorised persons are still within the hazardous area, stop the truck immediately.

⚠ WARNING!

Falling objects can cause accidents

Falling objects can injure the operator while the truck is being operated.

- ▶ The operator must remain within the protected area of the overhead guard while the truck is being operated.

Safety devices, warning signs and warning instructions

Safety devices, warning signs (see page 32) and warning instructions in the present operating instructions must be strictly observed.

⚠ CAUTION!

Reduced headroom can cause injuries

Trucks with reduced headroom are equipped with a warning label within the operator's line of sight.

- ▶ The max. recommended body size indicated on this warning sign must be observed.
- ▶ The headroom is also reduced when you wear a protective helmet.

⚠ CAUTION!

Loss of stability can cause accidents

Extended mast sections when the truck is travelling with or without load will reduce the truck's stability.

- ▶ Always travel with the mast holder retracted, the mast tilted back and the load handler lowered.

⚠ WARNING!

Accident risk due to removing or disabling of safety devices

Removal or disabling of safety devices such as the Emergency Disconnect switch, deadman switch, horn, warning lights, gates, protective window, covers, etc. may result in accidents and injuries.

▶ Report any defects immediately to your supervisor.

▶ Tag out and decommission a faulty lift truck.

▶ Only return the truck to service when you have identified and rectified the fault.

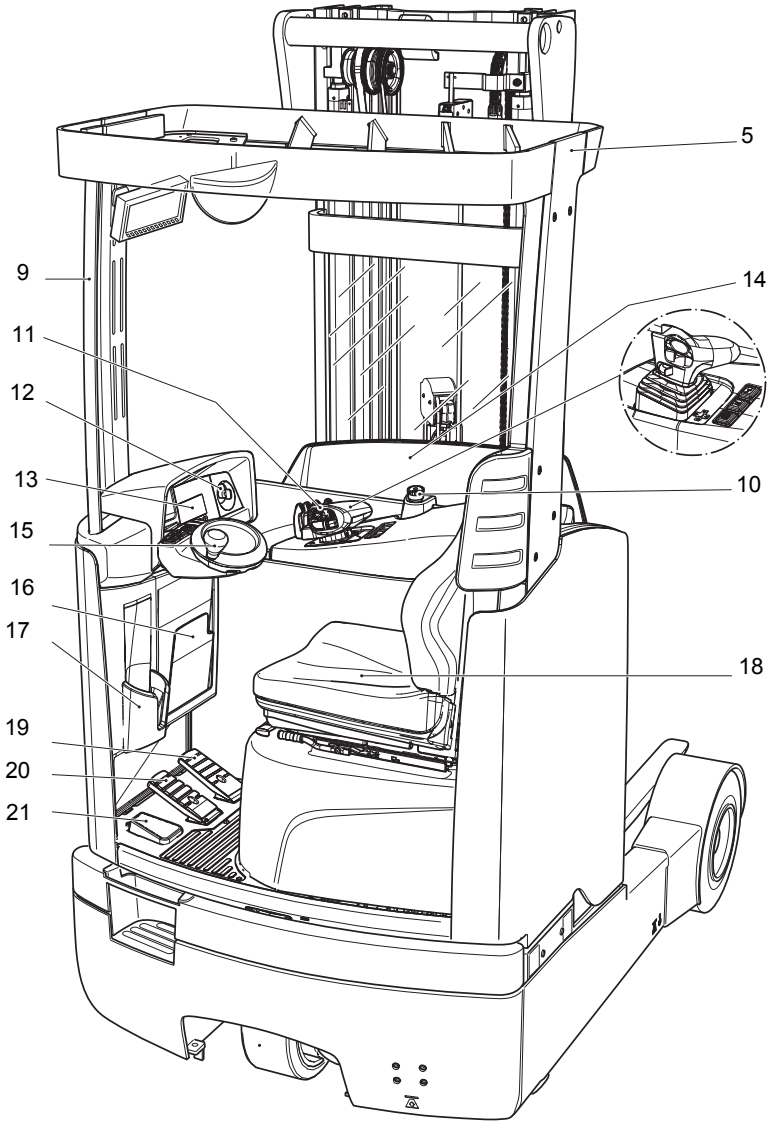
5
9
14
11
12
13
10
15
16
17
18
19
20
21

Item	Control and display element		Function
9	Grab handle	●	
10	Emergency disconnect switch	●	Switches power supply on and off.
11	soloPILOT	●	Controls the following functions: – Fwd/rev. travel direction – Load handler raise/lower – Mast forward/reverse tilt – Horn button – Side shift left/right – Auxiliary hydraulics (○) – Mast reach forward/reverse – Acknowledgement key (○)
	multiPILOT	○	
12	Key switch	●	Switches control current on and off. Removing the key prevents the truck from being switched on by unauthorised personnel.
	ISM access module	○	Switches the truck on.
	Keypad		
	Transponder		
	Easy Access storage compartment		
13	Control and display unit	●	Displays steering modes, warning indicators, incorrect operation notes and service displays
		○	Switches on the truck using Easy Access with PIN code
15	Steering wheel	●	Sets the travel direction
17	Bottle holder	●	
18	Driver's seat	●	
19	Accelerator pedal	●	Provides infinitely variable travel speed control
20	Brake pedal	●	Provides infinitely variable braking control.
21	Deadman switch	●	– Not applied: Travel and hydraulic functions inhibited, truck decelerates. – Applied: Travel and hydraulic functions enabled.

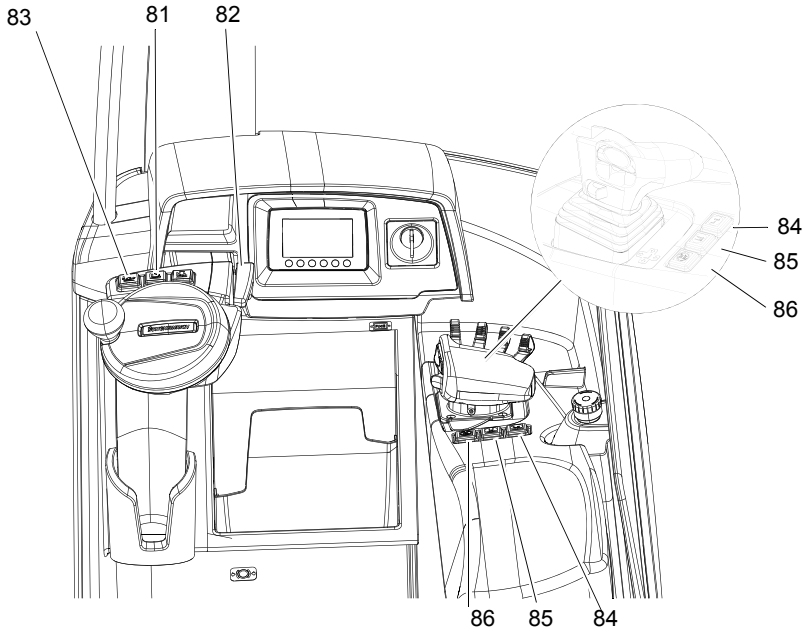
83
81
82
84
85
86
86
85
84

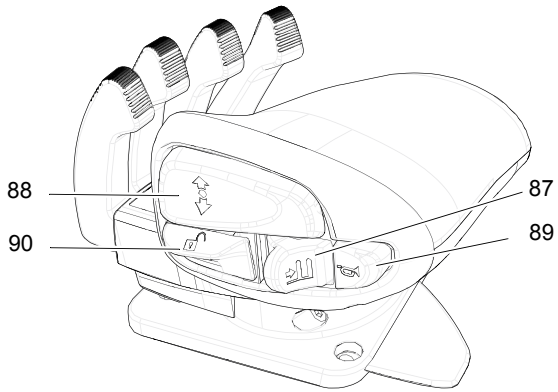
88
90
87
89

Item	Control and display element		Function
81	Weighing button	○	Weighs the load.
82	Steering column stop	●	
83	Limit switch system and lift height cut-off override button	○	Prevents damage to the truck and the load.
84	Forks horizontal button	○	Allows the load handler to be aligned horizontally.
85	Side shift centre position button	○	Moves the side shift to the centre position.
86	Steering mode button	○	Switches the steering mode between 180° and 360°.
87	Side shift button	○	Switches to the side shift function or to the connected hydraulic function.
88	Travel direction switch	●	Selects travel direction/neutral position.
89	Horn button	●	Activates a warning signal.
90	Acknowledgement button	○	Additional confirmation means for hydraulic functions requiring acknowledgement

2.1 Display unit

2.1.1 Display

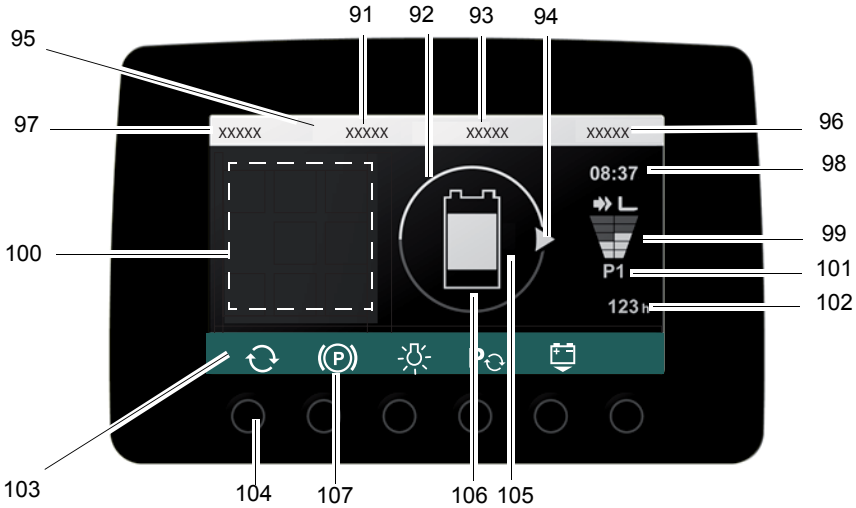

Item	Control and display element		Function
92	Steering mode		180° steering
			360° steering
94	Arrow to display the travel and steering directions		Shows the current travel direction of the truck and the current wheel position in 15° segments.
95	Information line		Displays event messages
98	Time		Shows the time.
99	Power display		Shows the travel/lift speed as a bar value
100	Status field		Displays the icons see page 70.
101	Operating program		Shows the operating program selected.
102	Service hours		Shows the truck service hours, see page 75.
103	Key allocation		see page 72.
104	Keys		Selection keys for the functions shown above them.
106	Battery capacity display		Battery discharge status
105	Battery type		Empty = Standard battery 1 = Dry battery 2 = XFC battery
91	Remaining run time		Shows the truck's remaining run time.
93	Load centre display		Shows the current load centre.
96	Lift-height display		Shows the lift height.
97	Load-weight display		Shows the weight of the raised load.

2.1.2 Symbols in the display

Symbol	Description	Colour	Function/meaning
	Manual parking brake	Red	Actuation of the manual parking brake
	Crawl speed	Green	Crawl speed is activated
	Service note	Yellow	Attention SDO request export or write parameters
		Red	Execute service function line-rupture safety valve test
	Warning	Yellow	Operating error
		Red	Truck malfunction
	Stop notice	Red	Functions deactivated due to truck malfunctions
	Shock display (ISM)	Yellow	Medium impact due to incorrect operation
		Red	Severe impact due to incorrect operation
	Deadman switch	Yellow	The yellow icon illuminates when controls are applied but the deadman switch is not.
	Overload	Red	The operational stability of the truck is at risk due to overload.
	Acknowledgement active	Green	Acknowledgement button active
	Acknowledgement feature: incorrect operation	Yellow	Acknowledgement button: incorrect operation
	Horizontal tilt	Green	Positioning of the forks in the horizontal position
	Lift cut-off	Yellow	Overriding the lift cut-off

Symbol	Description	Colour	Function/meaning
	Lowering cut-off (limit switch system)	Green	Lowering cut-off is overridden
		Yellow	Lowering cut-off is initiated
	Side shift centre	Green	Positioning of the side shift in the centre position
	Battery release	Red	Battery is released
	Battery charge status	Yellow	Battery charge status is between 1 and 12%.
		Red	Battery charge status is below 1%. Crawl speed and lift cut-off activated.
	Lighting	Green	Lighting on the truck is activated. Lighting does not include the floorspot option.
	Battery excess temperature	Yellow	Temperature of the lithium-ion battery is above 45°C.
		Red	Temperature of the lithium-ion battery is above 50°C.
	Battery low temperature	Yellow	Temperature of the lithium-ion battery is below 5°C.
		Red	Temperature of the lithium-ion battery is below 0°C.
	Lift deactivated	Yellow	Icon illuminates when lifting functions are cut out due to insufficient battery capacity.
	Operation Control	Red	Tilt limit reached

2.1.3 Softkeys

Symbol	Meaning	Function
	Button assignment	Switches the operating level
	Manual parking brake	Actuation of the manual parking brake
	Slow travel	Switches to slow travel
	Travel programs menu	Switches to the travel program menu
	Travel program up	Switches the travel program up
	Line laser	Actuation of the line laser (○)
	Battery release	Releases the battery trolley
	Free-text display	Switches to the free-text display
	Settings	Settings for the time and access
	Shut-down	Shut-down (○): Allows the truck to be switched off
	Operation Control menu	Switches to the Operation Control menu (○)
	Operation Control Load direction	Moves the load centre in the load direction (○)
	Operation Control Drive direction	Moves the load centre in the drive direction (○)

Symbol	Meaning	Function
A	Load chart A	Load centre for the current stacking operation (○)
B	Load chart B	
C	Load chart C	
	Light menu	Switches to the light menu (○)
	Fork work lights	Actuates the work lights on the fork (○)
	Drive direction work lights	Actuates the work lights in the drive direction on the overhead guard (○)
	Fork direction work lights	Actuates the work lights in the fork direction on the overhead guard (○)

2.1.4 Setting the time

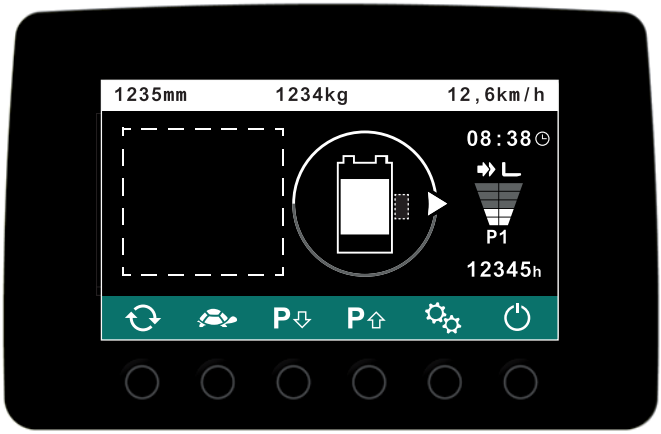

Setting the Time

Symbol	Procedure
	Press the button under the settings symbol.
	Press the button under the clock symbol.
	Use the arrow up key to change the time digit selected.
	Use the arrow down key to change the time digit selected.
	Press the confirm key to move to the next digit or to confirm the time.

The time is now set.

2.1.5 Battery discharge indicator

The battery charge status is shown on the truck display via a battery symbol (106). When a battery is discharged to the permissible discharge level, the battery symbol (106) is displayed empty. (see page 68)

➔ The standard setting for the battery discharge indicator (106) is based on a truck delivered with a standard battery.

2.1.6 Battery discharge monitor

If the residual capacity falls below the required level, lifting is inhibited. A corresponding display (100) appears. Lifting is not enabled until the connected battery is at least 70% charged.

2.1.7 Hourmeter

➔ Prepare the truck for operation, see page 76 or see page 119.

Service hours are counted while the truck is operational and the deadman button is pressed.

3 Preparing the Truck for Operation

3.1 Checks and Operations to Be Performed Before Starting Daily Work

⚠ WARNING!

Damage and other truck or attachment (optional equipment) defects can result in accidents.

If damage or other truck or attachment (optional equipment) defects are discovered during the following checks, the truck must be taken out of service until it has been repaired.

▶ Report any defects immediately to your supervisor.

▶ Mark defective truck and take out of service.

▶ Do not return the industrial truck to service until you have identified and rectified the fault.

Checking the truck before daily operation

Procedure

- Visually inspect the entire truck (in particular wheels and wheel bolts) for damage.
- Check the load handler for visible signs of damage such as cracks, bent or severely worn forks.
- Check the fork stop and fork retainer (108), see page 96.
- Visually inspect the hydraulic system in the visible area for damage and leaks.
- Make sure the driver's seat is locked in position.
- Test the horn and reversing buzzer (○) where applicable.
- Check that the load chart and warning labels are legible.
- Test the controls and displays.
- Test the steering.
- Check the steer angle display, turn the steering wheel in both directions as far as the stop and check that the wheel position is displayed on the control panel.
- Make sure the load chains are evenly tensioned.
- Test the seat belt (○). The belt should jam if extracted suddenly.
- Test the lift/lower, tilt and if applicable the attachment hydraulic control functions.
- Visually inspect the battery attachment and cable connections.
- Check the battery connectors are secure.
- Check that the battery is positioned securely.
- Makes sure the battery is locked.
- Check fork retainer (108) of integrated sideshifter is secure, tighten the bolts if necessary. Torque: 93 Nm.

➔ Top illustration: Integrated sideshifter
Bottom illustration: Integrated sideshifter with load backrest

- Check the fork retainer (108) on the fork carriage is secure, tighten the bolts if necessary. Torque: 93 Nm.

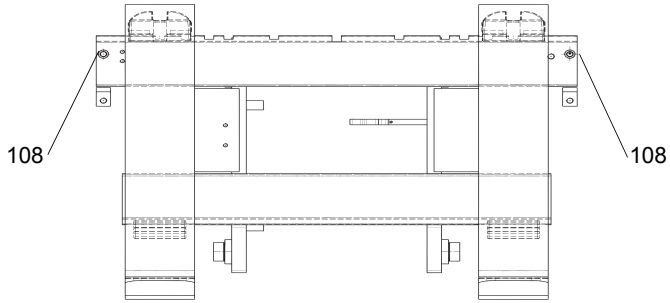

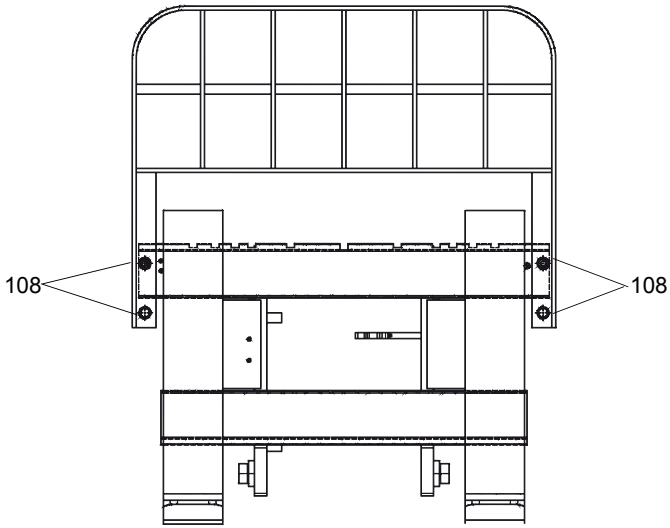

➔ Top illustration: Fork carriage
Top illustration: Fork carriage with load backrest

The truck is now checked.

3.2 Entry and exit

Entry and exit

Requirements

– Truck braked to a halt.

Procedure

- To enter, take hold of the grab handle (9), see page 64.
- Enter or leave the truck.

3.3 Setting up the operator position

Before starting to travel, adjust the driver’s seat, steering column and armrest (if necessary) so that all the controls are within reach and can be applied without having to strain.

3.3.1 Adjusting the Driver's Seat

The procedure for adjusting the driver’s seat applies to standard models. For other models, follow the manufacturer’s setting instructions. When adjusting, ensure that all controls are within easy reach.

⚠ CAUTION!

Moving the driver's seat is a trapping hazard

▶ Do not reach between the seat and the side wall or overhead guard when adjusting the seat.

Adjusting the driver's weight

NOTE

To achieve optimal seat cushioning the driver’s seat must be set to the driver’s weight.
Set the driver's weight when the seat is unoccupied.
Seat cushioning setting range: 50 - 130 Kg.

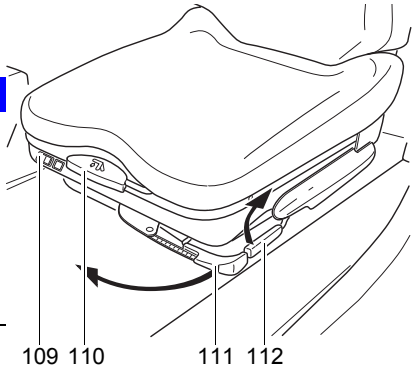

Procedure

- Pull the weight adjustment lever (111) in the direction of the arrow as far as the stop and then return it.
  The weight setting is set to a minimum value.
- Pull the weight adjustment lever (111) in the arrow direction until you reach the required weight on the scales.
- Restore the weight adjustment lever (111) to its original position.

The driver’s weight is now set.

Adjusting the backrest

Procedure

- Sit on the driver’s seat.
- Pull the lever (110) to adjust the backrest.
- Adjust the backrest tilt.
- Release the lever (110) again. The backrest is locked.

The backrest is now set.

Adjusting the seat position

⚠ **CAUTION!**

An unsecured driver's seat can cause injury

An unsecured driver's seat can slide out of its guide during travel, resulting in accidents.

▶ The driver's seat must be locked in position.

▶ Do not adjust the driver’s seat while travelling.

Procedure

- Sit on the driver’s seat.
- Pull up the driver’s seat locking lever (112) in the direction of the arrow.
- Push the driver’s seat forwards or backwards to the desired position.
- Engage the driver’s seat locking lever (112) in position.

The seat position is now correctly set.

➔ The optional seat heating (109) is operated via the switch on the driver's seat.

Adjust the seat heating (○)

NOTE

Avoid prolonged contact of uncovered / unprotected skin with the heated seat.

Procedure

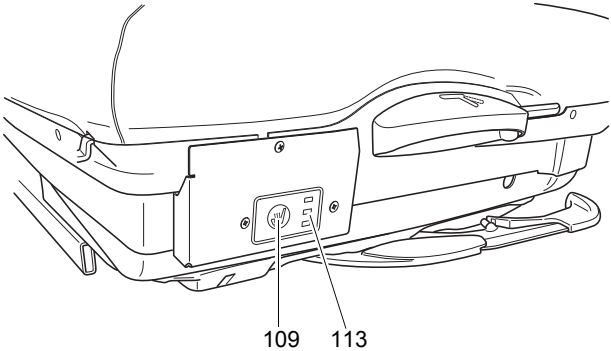

- Press the seat heating button (109) a single time.
  The heating changes to heat mode level 3 (highest level), all LEDs (113) are permanently lit.
- Press the seat heating button (109) again.
  The heating changes to heat mode level 2.
- Press the seat heating button (109) again.
  The heating changes to heat mode level 1.
- Press the seat heating button (109) again.
  The heating changes to operational status (off).

Seat heating set.

➔ In the event of an error one or more LEDs (113) next to the switch are lit. Switch off the truck. Switch the truck on again. Call the service department if necessary.

3.3.2 Adjusting the steering column

Adjusting the steering column

Procedure

- Release the steering column stop (82).
- Position the steering head (114).
- Fix the steering column stop (82) in position.

The steering column is now positioned.

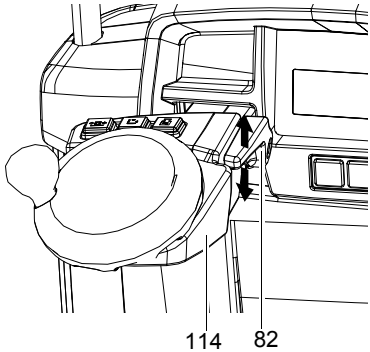

3.3.3 Seat belt (○)

NOTE

Seat belt optional equipment

On request from the customer, the truck can be fitted with a seat belt for special applications.

▶ Always put on the seat belt before starting the industrial truck.

▶ Do not modify the seat belt.

▶ Damaged or non-operational seat belts must be replaced by trained personnel.

▶ Seat belts must always be replaced after an accident.

▶ Only original spare parts must be used for retrofits or repairs.

➔ Protect the seat belt from contamination (e.g. cover it when the truck is idle) and clean it regularly. Frozen belt locks or pulleys must be thawed out and dried to prevent them from freezing up again.
The temperature of the warm air should not exceed +60 °C!

Checking the seat belt

Procedure

- Check the attachment points for wear and damage.
- Check the cover for damage.
- Pull the belt out fully from the retractor and check for damage (loose seams, fraying and nicks).
- Test the belt buckle and make sure the belt returns correctly into the retractor.

Check the automatic locking system

Procedure

- Park the truck on a level surface.
- Jerk the seat belt out suddenly.

➔ The locking system should prevent the belt from coming out.

The seat belt has now been checked.

Starting the industrial truck on steep slopes

The automatic blocking system locks the belt in the retractor when the truck is positioned on a steep slope. This prevents the belt from being pulled out of the retractor.

➔ Carefully drive the truck off the slope and then put on the belt.

Putting on the seat belt

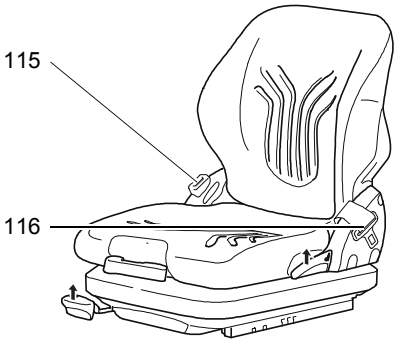

Procedure

- Sit on the driver's seat so that your back is resting against the backrest.
- Pull the seat belt smoothly out of the retractor.
- Place the seat belt tight against your body. Take care not to twist it.
- Engage the lock tongue (116) in the lock (115).

The seat belt is now in place

Taking off the seat belt

Procedure

- Hold onto the lock tongue (116) with one hand.
- Press the red button on the lock (115).
- Guide the lock tongue (116) manually back into the reel.

The seat belt is now removed.

4 Starting up the truck

4.1 Safety regulations for truck operation

Travel routes and work areas

Only use lanes and routes specifically designated for truck traffic. Unauthorised third parties must stay away from work areas. Loads must only be stored in places specially designated for this purpose.
The truck must only be operated in work areas with sufficient lighting to avoid danger to personnel and materials. Additional equipment is necessary to operate the truck in areas of insufficient lighting.

⚠ DANGER!

Do not exceed the permissible surface and point loading on the travel lanes.
At blind spots get a second person to assist.
The driver must ensure that the loading dock /dock leveller cannot be removed or come loose during loading/unloading.

⚠ DANGER!

Danger of death from falling truck
In the event that the truck falls from a loading bridge or ramp, the operator is at risk of serious injuries and potential death.

- ▶ Do not jump off the truck if it falls.
- ▶ Hold on with both hands.
- ▶ Tilt your body in the opposite direction of fall.
- ▶ Do not remove the optional seat belt (○).

➔ The operating company must take the necessary safety precautions and define special work instructions to prevent the danger of falls during operation. A seat belt (○) is recommended as an additional measure when using the truck on a ramp/ load bridge.

Travel conduct

The operator must adapt the travel speed to local conditions. The truck must be driven at slow speed when negotiating bends or narrow passageways, when passing through swing doors and at blind spots. The operator must always observe an adequate braking distance between the forklift truck and the vehicle in front and must be in control of the truck at all times. Abrupt stopping (except in emergencies), rapid U turns and overtaking at dangerous or blind spots are not permitted. Do not lean out or reach beyond the working and operating area.

Travel visibility

The operator must look in the direction of travel and must always have a clear view of the route ahead. If the truck is carrying loads that affect visibility, the truck must travel against the load direction. If this is not possible, a second person must walk alongside the truck as a lookout to observe the travel route while maintaining eye

contact with the operator. Proceed only at walking pace and with particular care. Stop the truck as soon as you lose eye contact.

⚠ WARNING!

Electromagnetic influence can result in accidents

Strong magnets can cause electronic components such as Hall sensors to become damaged, resulting in accidents.

▶ Do not use magnets in the operating area of the truck. Exceptions to this rule are commercial, weak clamping magnets for attaching notices.

Negotiating slopes and inclines

Negotiating slopes and inclines up to 15 % is only permitted when they are recognised lanes. The slopes and inclines must be clean, have a non-slip surface, and negotiating them safely must be within the technical specifications of the truck. The truck must always be driven with the load facing uphill. The industrial truck must not be turned, operated at an angle or parked on inclines or slopes. Inclines must only be negotiated at slow speed, with the driver ready to brake at any moment.

Negotiating lifts, loading ramps and docks

Lifts may only be negotiated if they have sufficient capacity, are suitable for driving on and authorised for truck traffic by the owner. The driver must satisfy himself of the above before entering these areas. The truck must enter lifts with the load in front and must take up a position which does not allow it to come into contact with the walls of the lift shaft. Persons riding in the lift with the forklift truck must only enter the lift after the truck has come to a rest and must leave the lift before the truck. The driver must ensure that the loading ramp / dock cannot move or come loose during loading / unloading.

Type of loads to be carried

The operator must make sure that the load is in a satisfactory condition. Loads must always be positioned safely and carefully. Use suitable precautions to prevent parts of the load from tipping or falling down.

⚠ DANGER!

Danger of death from falling truck

In the event that the truck falls from a loading bridge or ramp, the operator is at risk of serious injuries and potential death.

- ▶ Do not jump off the truck if it falls.
- ▶ Hold on with both hands.
- ▶ Tilt your body in the opposite direction of fall.
- ▶ Do not remove the optional seat belt (○).

➔ The operating company must take the necessary safety precautions and define special work instructions to prevent the danger of falls during operation. A seat belt (○) is recommended as an additional measure when using the truck on a ramp/ load bridge.

⚠ CAUTION!

Loss of stability can cause accidents

Extended mast sections when the truck is travelling with or without load will reduce the truck's stability.

- ▶ Always travel with the mast holder retracted, the mast tilted back and the load handler lowered.

4.2 Emergency Disconnect

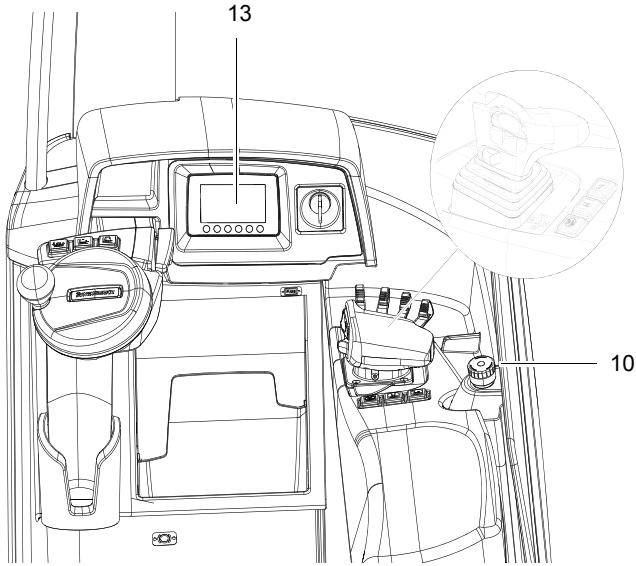

Applying the emergency disconnect switch

Procedure

⚠ CAUTION!

Risk of accident

The operation of the emergency disconnect switch must not be affected by any objects placed in its way.

➔ Do not use the emergency disconnect switch (10) as a service brake.

- Press the emergency disconnect switch (10).

All electrical functions are deactivated. The truck brakes to a halt.

Releasing the emergency disconnect switch

Procedure

- Pull or turn the emergency disconnect switch (10) to unlock it again.

All electrical functions are enabled and the truck is operational again (assuming the truck was operational before the emergency disconnect switch was pressed).
With ISM, transponder, keypad and Easy Access, the truck is still switched off.

4.3 Emergency stop

The truck is fitted with an emergency stop device. If a system fault is detected, the truck automatically brakes until it comes to a halt. If a fault is detected in the steering or brake systems, an information message will appear on the display and control unit (13), see page 64.

Re-setting the emergency stop

Procedure

- Press the Emergency Disconnect (10).
- Pull or turn the Emergency Disconnect switch (10) to unlock it.

The emergency stop is reset.

➔ If the emergency stop is shown on the control and display unit (13) after repeatedly resetting the emergency stop, notify the manufacturer's service department.

4.4 Travel

⚠ DANGER!

Danger of death from falling truck

In the event that the truck falls from a loading bridge or ramp, the operator is at risk of serious injuries and potential death.

▶ Do not jump off the truck if it falls.

▶ Hold on with both hands.

▶ Tilt your body in the opposite direction of fall.

▶ Do not remove the optional seat belt (○).

➔ The operating company must take the necessary safety precautions and define special work instructions to prevent the danger of falls during operation. A seat belt (○) is recommended as an additional measure when using the truck on a ramp/ load bridge.

⚠ WARNING!

Improper travel can result in accidents

▶ Do not get up from the driver's seat during travel.

▶ Make sure that the travel area is clear.

▶ Adapt the travel speed to the conditions of the route, the work area and the load.

▶ Tilt the mast back and raise the fork carriage approx. 200 mm.

▶ Make sure you have enough visibility when reversing.

⚠ CAUTION!

Loss of stability can cause accidents

Extended mast sections when the truck is travelling with or without load will reduce the truck's stability.

▶ Always travel with the mast holder retracted, the mast tilted back and the load handler lowered.

➔ Each time the truck is started the operation of the emergency stop safety switch is tested. The fault display is shown on the display unit for the duration of the safety check. Travel and steering are only enabled if the condition is satisfactory.

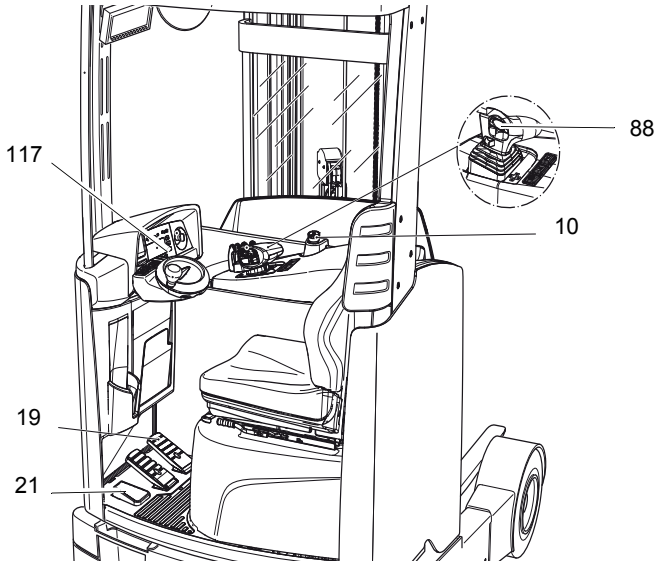

Travel

Requirements

– Truck prepared for operation, see page 76.

Procedure

- Release the parking brake, to do this press the parking brake button (117).
- Select the travel direction, to do this
  - Push the direction button (88) up to select travel in the forks direction.
  - Push the direction button (88) down to select travel in the drive direction.
- Press and hold down on the deadman button (21).

➔ The deadman button (21) ensures that the driver's feet do not extend beyond the geometry of the truck during travel. If it is not pressed, travel and lifting are inhibited with the exception of steering, the control and display unit and the horn. The truck coasts according to the coasting brake parameter setting and after a short time comes to a halt via the drive brake.

- Apply the accelerator pedal (19).

➔ The travel speed is governed by the accelerator (19).

The truck travels in the direction selected.

4.5 Brakes

The truck’s brake pattern depends largely on the ground conditions. The driver must take this into consideration when handling the truck.

The truck can brake in three different ways:
– With the service brake
– With the coasting brake
– With the reversing brake

⚠ WARNING!

Individual parameter settings can cause accidents

If the truck is operated by several drivers (e.g. multi-shift operation) and the parameters are individually set, be aware of the different brake and travel patterns.

▶ Test the truck's response on start-up.

⚠ WARNING!

Accident risk

The brake pattern of the truck depends largely on the ground conditions.

▶ The driver must be aware of travel route conditions and them into account when braking.

▶ Brake with care to prevent the load from slipping.

▶ Allow for increased braking distance when travelling with an attached load.

▶ Use the service brake in emergencies.

4.5.1 Braking with the reversing brake

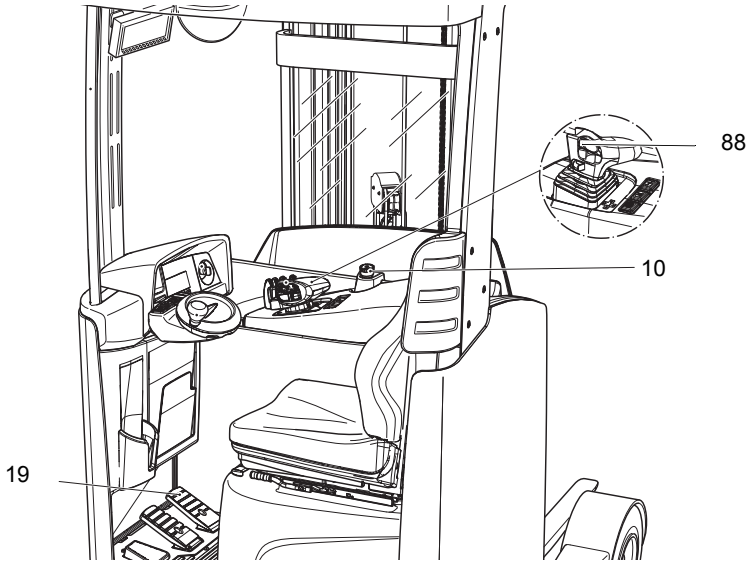

Braking with the reversing brake

Procedure

- Set the travel direction switch (88) to the opposite direction while travelling.

The truck decelerates until it starts to travel in the opposite direction.

➔ This method reduces energy consumption. Energy is recovered, which is controlled by the traction current controller. The energy recovery is indicated on the control and display unit.

4.5.2 Braking with the coasting brake

Braking with the coasting brake

Procedure

- Take your foot off the accelerator pedal (19).

The truck decelerates.

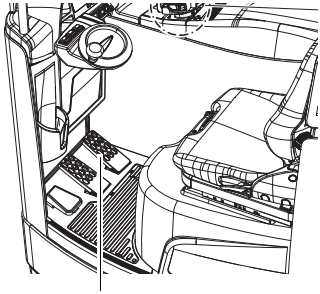

19

4.5.3 Braking with the service brake

Braking with the service brake

Procedure

- Press down on the brake pedal (20) until you reach the required deceleration.

The truck decelerates depending on the brake pedal position.

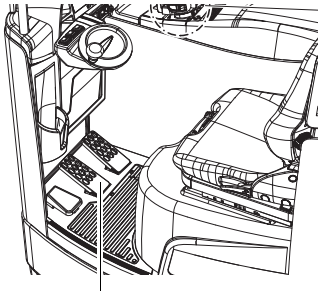

20

➔ If the brake pedal is applied suddenly just before the truck stops, the drive brake also applies and is released when the brake pedal is released.

4.6 Steering

4.6.1 Steering type

Reverse steering

When travelling forward (travel in direction of entry = drive direction) steer left to turn into a left hand bend and right into a right hand bend. The drive wheel position is indicated on the driver's display.

Forward steering (○)

When travelling forward (travel in direction of entry = drive direction) steer left to turn into a right hand bend and right into a left hand bend. The drive wheel position is indicated on the driver's display.

4.6.2 Setting the steering mode (○)

Press the steer mode button (86) to change between 180° and 360° steering. The range selected is shown in the control and display unit (13).

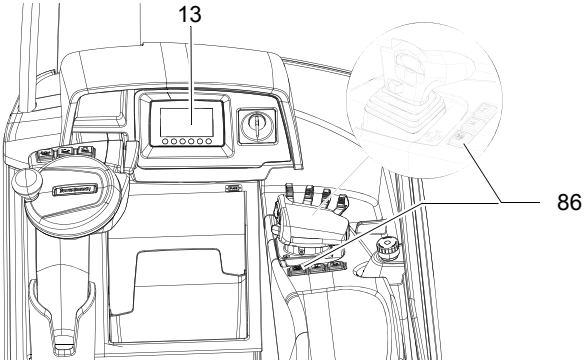

Setting the steering mode

Procedure

- Press the steering mode button (86).

The steering mode is now set.

Steering

Procedure

- Turn the steering wheel in the desired direction.

The truck travels in the required direction.

4.7 Adjusting the forks

⚠ WARNING!

Unsecured forks can cause injury

You can injure your legs when replacing the forks.

▶ Never pull the forks towards your body.

▶ Always push the forks away from your body.

▶ Secure heavy forks with lifting slings and a crane before pushing them down from the fork carriage.

▶ After replacing the forks fit the retaining bolts (118) and make sure the bolts are seated correctly. Retaining bolt torque: 85 Nm.

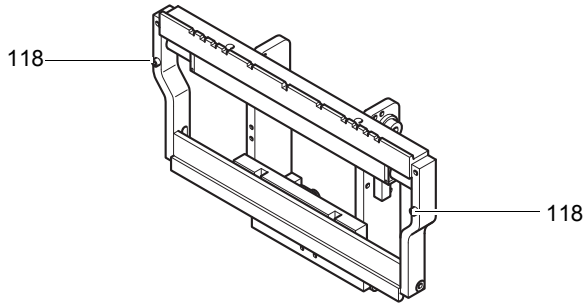

Adjusting the forks

Requirements

– Park the truck securely, see page 111.

Procedure

- Lift up the locking lever (119).
- Push the forks (120) into the correct position on the fork carriage (121).
- Swing the locking lever (119) down and move the fork tines until the locking pin (120) engages in a slot.

The forks are now adjusted.

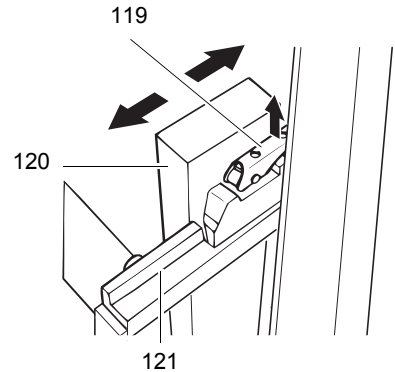

4.8 Lifting, transporting and depositing loads

⚠ WARNING!

Risk of accident due to unsecured and incorrectly positioned loads

Before lifting a load unit, the driver must make sure that it has been correctly palletised and does not exceed the truck's capacity.

- ▶ Instruct other people to move out of the hazardous area of the truck. Stop using the truck if people do not vacate the hazardous area.
- ▶ Only carry loads that have been correctly secured and positioned. Use suitable precautions to prevent parts of the load from tipping or falling down.
- ▶ Do not transport loads other than on the authorised load handler.
- ▶ Damaged loads must not be transported.
- ▶ Never exceed the maximum loads specified on the load chart.
- ▶ Never stand underneath a raised load handler.
- ▶ Do not stand on the load handler.
- ▶ Do not lift other people on the load handler.
- ▶ Do not reach through the mast.
- ▶ Check the fork spread before lifting the load and adjust if necessary.
- ▶ Bring the forks under the load such that at least 75% of the load is on the forks.
- ▶ No one is permitted in the adjacent aisles when there is a risk of displaced stored pallets or other loads.
- ▶ When transporting high or multiple individual loads, a load backrest must be used.
- ▶ It is forbidden to pick up, transport and set down loads using two trucks.

⚠ CAUTION!

Loss of stability can cause accidents

Extended mast sections when the truck is travelling with or without load will reduce the truck's stability.

- ▶ Always travel with the mast holder retracted, the mast tilted back and the load handler lowered.

Lifting and lowering with the SOLO-PILOT

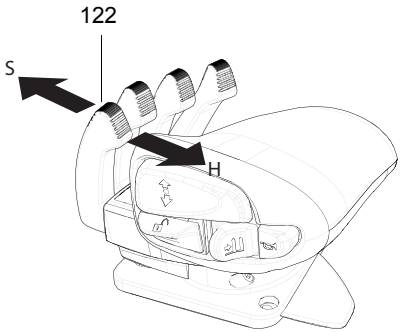

Procedure

- Pull the SOLO-PILOT lever (122) in direction H to raise the load unit.
- Push the SOLO-PILOT lever (122) in direction S to lower the load unit.
- Apply the SOLO-PILOT lever (122) until you reach the required lift height.

➔ The lift/lower speed is determined by the inclination of the control lever.

➔ When you reach the limit position return the control lever to its home position.

The load unit is now raised or lowered.

Lifting and lowering with the MULTI-PILOT

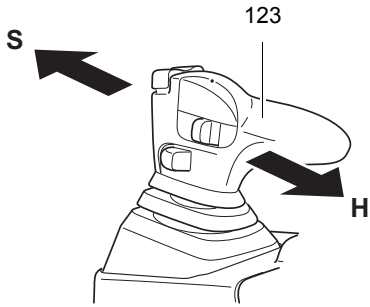

Procedure

- Pull the MULTI-PILOT (123) in direction H to raise the load unit.
- Push the MULTI-PILOT (123) in direction S to lower the load unit.
- Apply the MULTI-PILOT until you reach the required lift height.

➔ The lift/lower speed is determined by the inclination of the control lever.

➔ When you reach the limit stop the pressure relief valve makes a noise. Set the control lever immediately to the home position.

The load unit is now raised or lowered.

Deactivating the speed reduction

Procedure

- Lower the load handler.
- Set the accelerator pedal to the zero (home) position.

This deactivates the speed reduction and releases normal travel.

⚠ CAUTION!

Risk of trapping from moving parts!

When the mast holder moves you can get trapped between the mast and battery tray.

▶ Do not reach between the mast and the battery tray.

Moving the mast holder with the SOLO-PILOT

Procedure

- Push the SOLO-PILOT (76) in direction (T) to extend the mast holder forward.
- Pull the SOLO-PILOT (76) in direction (U) to retract it.

The mast holder is now extended.

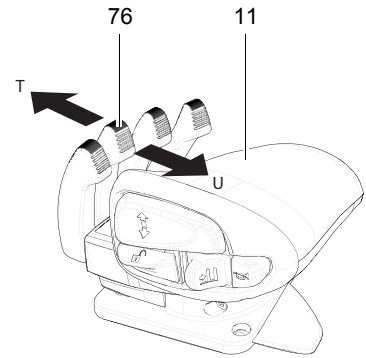

Moving the mast holder with the MULTI-PILOT

Procedure

- Push the MULTI-PILOT (123) in direction (T) to extend the mast holder forward.
- Pull the MULTI-PILOT (123) in direction (U) to retract it.

The mast holder is now extended.

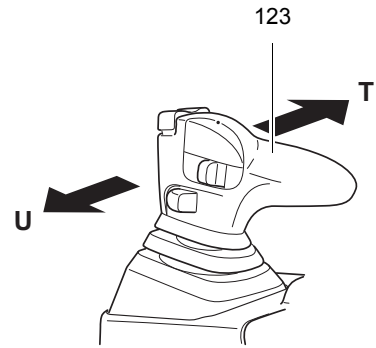

Tilting the mast / fork carriage with the SOLO-PILOT

Procedure

- Push the SOLO-PILOT lever (124) in direction (V) to tilt the mast holder forward.
- Pull the SOLO-PILOT lever (124) in direction (R) to retract it.

The mast / fork carriage is tilted.

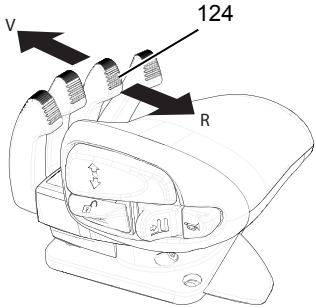

Tilting the mast / fork carriage with the MULTI-PILOT

Procedure

- To tilt forward, push the MULTI-PILOT (125) in direction (V).
- To tilt back, push the MULTI-PILOT (125) in direction (R).

The mast / fork carriage is tilted.

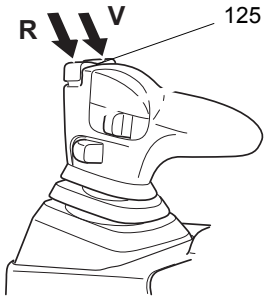

Lifting load units

Requirements

– Load unit correctly palletised.
– Fork spread for the pallet checked and adjusted if necessary.
– Load unit weight matches the truck's capacity.
– Forks evenly loaded for heavy loads.

Procedure

- Drive the truck carefully up to the pallet.
- Set the mast vertical.
- Extend the mast holder.
- Raise the forks to the correct height.
- Slowly insert the forks into the pallet until the fork shank touches the pallet.
- Raise the load handler.
- Tilt the mast back.
- Retract the mast holder.
- Reverse carefully and slowly until the load unit is outside the storage area. Make sure you have a clear route when travelling in the forks direction.

Load unit raised.

Transporting load units

Requirements

– Load unit positioned correctly on the forks.
– Mast and load section tilted back fully.

Procedure

- Lower the load unit in the transport position.
- Accelerate and decelerate gradually.
- Adapt your travel speed to the conditions of the route and the load you are transporting.
- Watch out for other traffic at crossings and passageways.
- Always travel with a lookout at blind spots.
- On slopes and inclines always carry the load facing uphill, never approach at an angle or turn.

NOTE

Loads must not be deposited on travel or escape routes, in front of safety mechanisms or operating equipment that must be accessible at all times.

Depositing load units

Requirements

– Storage location suitable for storing the load.

Procedure

- Set the mast vertical.
- Drive carefully up to the storage location.
- Raise the load unit to the correct height.
- Extend the mast holder.
- Carefully lower the load handler so that the forks are clear of the load.
  Avoid depositing the load to prevent damage to the load and the load handler.
- Lowers the load handler.
- Retract the mast holder. Carefully remove the forks from the pallet.

The load unit is lowered.

4.9 Operating attachments

4.9.1 Safety instructions for operating additional attachments

Optionally, trucks can be fitted with one or more auxiliary hydraulic functions to operate attachments. The auxiliary hydraulics are indicated with HF4 and HF5. Auxiliary hydraulic functions for exchangeable equipment are fitted with replacement couplings on the fork carriage. To fit exchangeable equipment see page 109.

⚠ DANGER!

Attaching exchangeable equipment can result in accidents.

Other people can be injured by attaching exchangeable equipment. Use only exchangeable equipment that has been deemed safe after a risk analysis carried out by the owner.

- ▶ Only use attachments that have been designed by the attachment manufacturer for use with the respective industrial truck.
- ▶ Only use attachments that have been fitted for the purpose by the owner.
- ▶ Make sure the operator has been instructed in the use of the attachment and that he uses it for its correct purpose.
- ▶ Re-assess the residual capacity of the truck and, if it has been altered, attach an additional capacity plate to the truck.
- ▶ Note the attachment manufacturer's operating instructions.
- ▶ Use only attachments that do not restrict visibility in the travel direction.

If visibility in the travel direction is impaired, the operating company must determine and apply suitable measures to ensure the safe operation of the truck. A lookout may have to be used or certain hazardous areas may have to be cordoned off. The truck can also be equipped with optional visual aids such as a camera system or mirrors. Travelling with visual aids requires plenty of practice at slow speed.

Safety instructions for side shifter and fork adjuster attachments

⚠ WARNING!

When using multi fork adjusters (multi pallet clamps), restricted visibility and reduced lateral tilt resistance can result in accidents.

▶ Adapt the travel speeds to the visibility and load.

▶ Make sure you have sufficient visibility when travelling in the load direction.

Safety instructions for clamping attachments (e.g. baling clamps, barrel clamps, grabs etc.)

⚠ WARNING!

Falling loads can cause accidents

This can result in malfunctions and the load can fall accidentally.

▶ Clamping attachments may only be added to trucks which have a button to enable additional hydraulic functions.

▶ Clamping attachments must only be operated on trucks will auxiliary hydraulics HF4 or HF5.

▶ When connecting the attachment make sure that the hydraulic lines of the attachment are connected to the right ports, see page 109.

Safety instructions for rotary attachments

⚠ WARNING!

A non-centred load centre of gravity can result in accidents

When using rotary devices and non-centred loads, the centre of gravity can be displaced from the centre with a high risk of accidents.

▶ Adapt the travel speed to the load.

▶ Lift the load from the centre.

Safety instructions for telescopic attachments

⚠ WARNING!

Accident risk from increased tipover hazard and reduced residual capacity

There is a greater risk of tipover with extended telescopic attachments.

▶ Do not exceed the maximum loads specified on the capacity plate.

▶ Only use the telescopic function for stacking and retrieving.

▶ Retract the telescopic attachment fully during transport.

▶ Adapt the travel speed to changed load centre of gravity.

Safety instructions for attachments when transporting suspended loads

⚠ WARNING!

Swinging loads and a reduced residual capacity can result in accidents.

Transporting hanging loads can reduce the stability of the truck.

- ▶ Adapt the travel speed to the load, less than walking pace.
- ▶ Secure swinging loads for example with lifting slings.
- ▶ Reduce the residual capacity and have it certified by a expert.
- ▶ If the truck is to be operated with hanging loads, proof of sufficient safety distance under local operating conditions must be obtained from a specialist assessor.

Safety instructions for using loading buckets as attachments

⚠ WARNING!

Increased mast loading can cause accidents.

- ▶ When carrying out the daily checks and operations before starting, see page 76, check in particular check the fork carriage, mast rails and mast rollers for damage.

Safety instructions for fork extensions

⚠ WARNING!

Unsecured and oversized fork extensions can cause accidents.

- ▶ Only use fork extensions that are suitable and have been approved for the base forks of the truck. Observe the data on the data plates of the fork extensions and truck.
- ▶ The basic fork length must be at least 60% of the length of the fork extension.
- ▶ Push out the fork extensions fully and lock onto the basic fork arms.
- ▶ Lay the load as close to the fork shanks as possible. The distance between the overall centre of gravity of the load and the fork shank must not exceed 50% of the length of the fork extension.
- ▶ When carrying out checks and operations before daily starting, see page 76, check the fork extension lock.
- ▶ Mark any fork extensions with an incomplete or faulty lock and take them out of service.
- ▶ Do not use trucks with an incomplete or faulty fork extension lock. Replace the fork extension.
- ▶ Only restore the fork extension to service when the fault has been rectified.
- ▶ Use only fork extensions which are free of dirt and foreign bodies near the entry opening point. Clean the fork extensions as required.

➔ The weight of the fork extensions reduces the residual capacity of the truck. When determining the residual capacity, the increased load distance must be taken into account, see the data plate and capacity plate of the fork extension.

4.9.2 Integrated Side Shift (soloPILOT)

➔ The directions "left" and "right" refer to the load handler when viewed from the operator position.

Moving the sideshifter

Procedure

- Press the button (126) in direction (X1). The sideshifter moves to the left.
- Press the button (126) in direction (Y1). The sideshifter moves to the right.

➔ Note the capacity reduces when traversing.

The sideshifter is now moved.

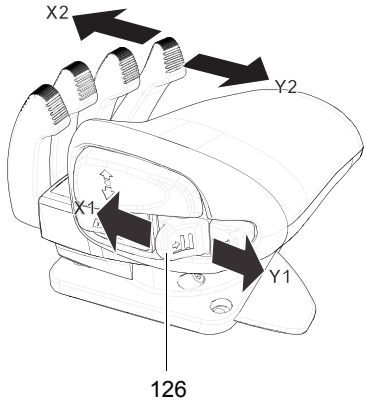

➔ On trucks without integrated side shift and HF4 connection, the button 126 may have a different assignment.

4.9.2.1 Operating Additional soloPILOT Attachments (○)

The control lever (127) has functions (X2) and (Y2) to operate hydraulic attachments connected to the terminal HF5 (see manufacturer's operator manual).

Controlling the auxiliary hydraulic function using the acknowledgement button (○)

Procedure

- Press the acknowledgement button (90)
- Within 1.5 seconds, move the lever (127) in direction X or Y

The attachment performs its function

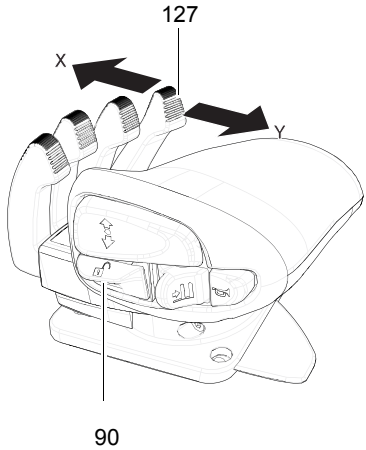

4.9.3 Integral sideshifter (MULTI-PILOT)

➔ The directions "left" and "right" refer to the load handler when viewed from the operator position.

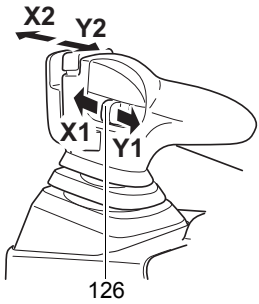

Moving the sideshifter

Procedure

- Press the button (126) in direction (X1). The sideshifter moves to the left.
- Press the button (126) in direction (Y1). The sideshifter moves to the right.

➔ Note the capacity reduces when traversing.

The sideshifter is now moved.

➔ On trucks without integrated side shift and HF4 connection, the button 126 may have a different assignment.

4.9.3.1 Operating Additional Attachments for the multiPILOT (○)

The control lever (127) has functions (X2) and (Y2) to operate hydraulic attachments connected to the terminal HF5 (see manufacturer's operator manual).

Controlling the auxiliary hydraulic function using the acknowledgement button (○)

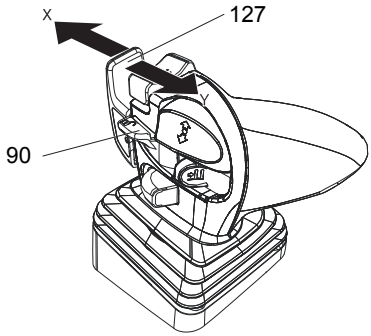

Procedure

- Press the acknowledgement button (90)
- Within 1.5 seconds, move the lever (127) in direction X or Y

The attachment performs its function

4.10 Fitting additional attachments

⚠ WARNING!

Incorrectly connected attachments can cause accidents.

Attachments with incorrectly connected hydraulic attachments can result in accidents.

▶ Attachments must only be assembled and commissioned by trained, specialist personnel.

▶ Observe the manufacturer's operating instructions.

▶ Before starting, check the fasteners are positioned correctly and securely and make sure they are complete.

▶ Before starting, make sure the attachment is working correctly.

Connecting attachments hydraulically

Requirements

– Non-pressurised hydraulic hoses.
– The exchange ports on the truck are marked HF4 and HF5.
– Attachment directions of movement defined to match the controls' direction of movement.

Procedure

- Non-pressurised hydraulic hoses
  - Switch off the truck and wait a few minutes.
- Attach the plug connector and engage it in position.
- Mark the controls with symbols that indicate their function.

The attachment is now hydraulically connected.

➔ Spilled hydraulic oil must be set using a suitable agent and disposed of in accordance with environmental regulations.
If hydraulic oil comes into contact with the skin, wash it off immediately with soap and water. If it comes into contact with the eyes rinse them immediately with flowing water and call for a doctor.

4.11 Emergency lowering

The load handler can be lowered manually if a fault occurs in the hydraulic controller.

⚠ WARNING!

Lowering the mast can result in injuries

- ▶ Instruct other people to move out of the hazardous area of the truck during emergency lowering.
- ▶ Never stand underneath a raised load handler.
- ▶ Apply the emergency lowering valve from a position next to the truck.
- ▶ Emergency lowering of the mast cannot be applied when the load handler is in the rack.
- ▶ Report any defects immediately to your supervisor.
- ▶ Tag out and decommission a faulty lift truck.
- ▶ Only return the truck to service when you have identified and rectified the fault.

Mast emergency lowering

Requirements

– Load handler is not in the rack.
– Turn the Emergency Disconnect switch and key switch off.
– Disconnect the battery.

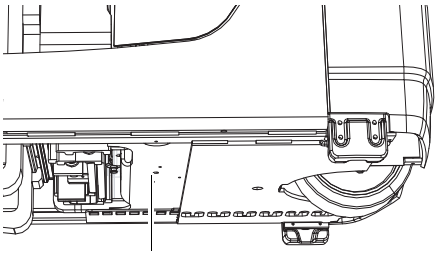

Procedure

- Release the emergency lowering valve (128) underneath the truck by max. 1/2 a turn anti-clockwise with the4 mm Allen screw.
- The mast and load handler will lower slowly. If necessary the lowering speed can be reduced by turning clockwise or the load can be stopped.
- When the load has been lowered, close the emergency lowering valve with a torque of 2,5 Nm.

The mast is now lowered.

⚠ WARNING!

Only return the truck to service when you have identified and rectified the fault.

4.12 Parking the truck securely

⚠ WARNING!

An unsecured truck can cause accidents

Parking the truck on an incline, without the brakes applied or with a raised load / load handler is dangerous and is strictly prohibited.

▶ Always park the truck on a level surface. In special cases the truck may need to be secured with wedges.

▶ Always fully lower the mast and load handler.

▶ Tilt the mast forward.

▶ Always apply the parking brake button before parking the truck.

▶ Choose a place to park where no other people are at risk of injury from lowering forks.

▶ Do not park and abandon a truck on an incline.

Parking the truck securely

Procedure

- Fully lower the load handler and tilt it forward.
- Retract the mast holder fully.
- Switch off the truck. To do this:
  - For a key switch, turn the key in the key switch to the left as far as the stop and remove the key.
  - Keyless access systems (○), see page 119.
- Press the emergency disconnect switch.

The truck is parked.

5 Troubleshooting

5.1 Recovering the truck

⚠ CAUTION!

This operation must only be performed by suitably trained maintenance personnel. When the brakes are de-activated the truck must be parked on a level surface, since the brakes are no longer effective.

Preparing to move the truck without its own drive system

Procedure

- Turn the Emergency Disconnect switch and key switch off.
- Disconnect the battery.
- Prevent the truck from rolling away.
- Remove the seat panel, see page 172.

Truck prepared.

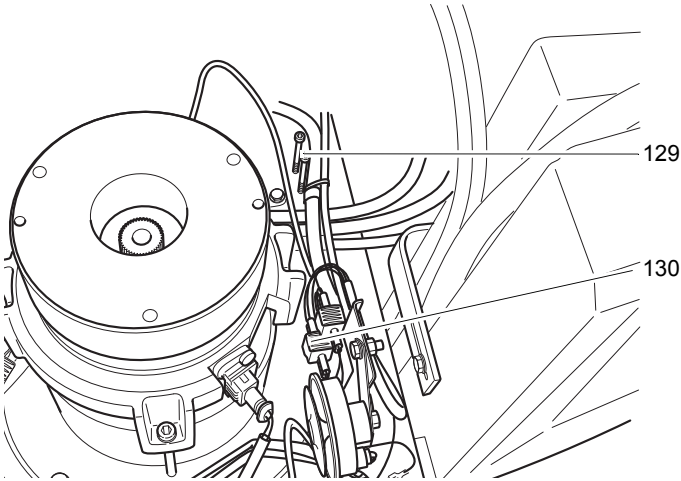

Releasing the magnetic brake

Tools and Material Required

– Screws (2 x M6) (129)
– Allen key

Procedure

- Disconnect the two-pin connector (130) from the magnetic brake.
- Remove the screws (2 x M6) (129) from the drive plate and insert them in the magnetic brake holes.

The magnetic brake is now released.

Aligning the drive wheel

Procedure

- Remove the protective cap over the centre screw.

⚠ CAUTION!

Tensioned tyres can cause accidents

When steering in the standing position the driving wheel band is under tension. Releasing the Allen key or steering crank can create a correcting moment.

▶ Release the Allen key or steering crank carefully.

➔ Only adjust the position of the steering wheels when the truck is stationary.

- Place the Allen key or steering crank (131) on the steering transmission and turn the drive wheel to the required steering position.

The drive wheel is now aligned.

➔ The steering wheel setting can only be adjusted when the truck is stationary.

Towing the truck

⚠ WARNING!

An unsecured truck can cause accidents

Parking the truck on an incline or with a raised load handler is dangerous and is strictly prohibited.

▶ Park the truck on a level surface. In special cases the truck may need to be secured with wedges.

▶ Fully lower the load handler.

▶ Select a place to park where no other people are at risk of injury from the lowered load handler.

▶ If the brakes are not working, place wedges underneath the wheels of the truck to prevent it from moving.

⚠ WARNING!

Accident risk

Other people can be injured if the truck is towed incorrectly.

▶ Only use vehicles to tow the truck which have sufficient tow and brake forces for the trailer load without its own braking system.

▶ Always tow the truck at walking pace.

▶ Do not park the truck with the parking brake released.

Tools and Material Required

– Tow rope, tow force > 5 to

Procedure

- Guide the tow rope around the struts of the overhead guard as shown in the diagram to tow the truck in the drive direction.

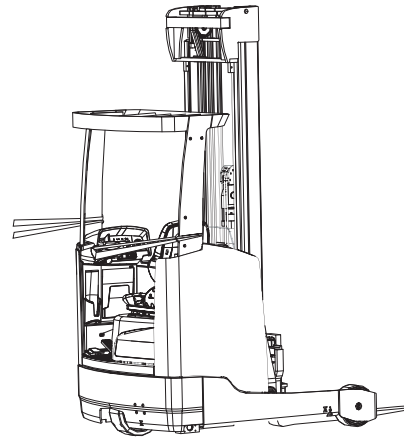

- Guide the tow rope around the mast as shown in the diagram to tow the truck in the forks direction.
- Tow the truck carefully and slowly.
- When the truck reaches its destination, restore the brake system to its operating condition.

The truck has now been towed.

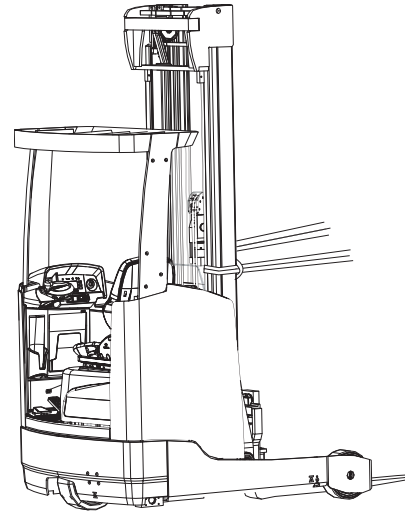

Activating the magnetic brake

Tools and Material Required

– Screws 2 x M6
– Allen key

Procedure

- Remove the screws (2 x M6) from their holes in the magnetic brake and insert them in the drive plate.
- Connect the two-pin connector to the magnetic brake.

Magnetic brake is activated.

5.2 Warning messages

Display	Cause	Action
1901	During system start-up, the accelerator pedal zero position could not be determined.	Do not press the accelerator pedal during system start-up.
1904	Accelerator pedal pressed, but no travel direction selected.	Take your foot off the accelerator pedal, select a travel direction and set off.
1909	Accelerator pedal pressed and parking brake not released via parking brake button.	Release the parking brake by pressing the parking brake button.
1917	Accelerator and brake pedals pressed simultaneously.	Press one pedal at a time only.
2951	Lift function activated on multi/ soloPILOT during system start-up. No zero position sensing possible.	Do not apply the multi/soloPILOT during system start-up. – Switch off the truck. – Switch the truck on again. – Call the service department if necessary.
1952	Travel direction switch pressed during system start-up.	Do not press the travel direction switch during system start-up
9961	ISM (option) has detected a shock event in the vertical direction	Obtain acknowledgement from authorised person (warehouse manager) and arrange for the truck to be started up again
9962	ISM (option) has detected a shock event in the horizontal direction	Obtain acknowledgement from authorised person (warehouse manager) and arrange for the truck to be started up again
5990	The electrolyte level sensor check (battery-management option) on the battery has detected a lack of electrolyte	Add electrolyte.
5992	After switching on the truck, no radio network could be established with the battery management	– Switch off the truck. – Switch the truck on again. – Check battery management connection. – Call service department.
5408/ 5409	Lithium-ion battery overtemperature	Stop work.
5413	Lithium-ion battery low temperature	Move truck to warm environment.

➔ For all other warning messages switch the truck off and on again. If the warning message appears again call the service department.

6 Optional equipment

6.1 Keyless Access System

The keyless access system allows an individual code to be allocated to each operator or group of operators.

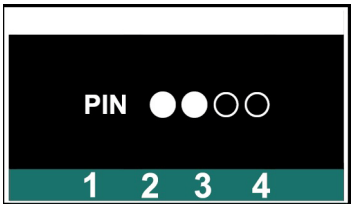

132

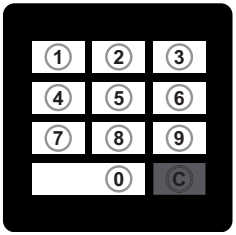

133

134

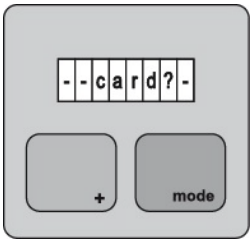

135

Item	Description
132	Display unit (EasyAccess Softkey): – Description, see page 68 – Entry of 4-digit set-up and access codes – Up to 10 access codes can be stored – For set-up and access codes with the numbers 1 to 4
133	Keypad (EasyAccess PINCode): – Consists of keys 0 to 9 and C (clear) – Entry of 4-digit set-up and access codes – Up to 100 access codes can be stored
134	Transponder reader (EasyAccess Transponder): – Up to 100 transponders can be stored
135	ISM Online: – If the truck is equipped with an ISM Online access module, see "ISM Online Access Module" operating instructions.

6.2 General Information about the Use of Keyless Access Systems

The default code is to be found on a sticker. When using for the first time, change the set-up code and remove the sticker!

– Default code: 1-2-3-4
– Factory set-up code: 2-4-1-2

➔ When a valid code is entered or a valid transponder used, a green tick appears in the display unit.
When an invalid code has been entered or a invalid transponder used, a red cross is displayed, and the entry must be repeated.

➔ If the truck is not used for a certain length of time, the display unit switches to standby mode. Pressing any key cancels the standby mode.

Key allocation in menu for managing codes or transponders (○)

Symbol	Meaning
	Back: Cancels the current procedure and returns to the previous menu.
	Log-in process: Displays the chronological log-in process
	Change set-up code: To change the set-up code and to activate the keypad or the transponder reader
	Edit access code / transponder: To add or delete access codes and transponders

Key allocation in the submenus

Symbol	Meaning
	Up selection: To select access codes or transponders, to scroll back during the log-in process
	Down selection: To select access codes or transponders, to scroll forward during the log-in process
C	Delete: To delete selected access codes
+	Add: To add new access codes

Key allocation in the submenus

Symbol	Meaning
✓	Confirm: To confirm an entry or a transponder code

The following additional settings can be performed by the manufacturer's customer service department.

6.3 Commissioning the Keypad and the Transponder Reader

If the truck is equipped with a keypad or a transponder reader, it can only be operated using the keys in the display unit. The keypad and the transponder reader have to be activated by the operating company.

6.3.1 Activating the keypad

Procedure

- Release the emergency disconnect switch, see page 88.
- Enter the default code 1-2-3-4 using the keys below the display unit (132).

  The truck is switched on.

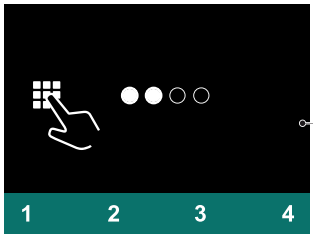

132

- Press the key below the "Settings" symbol (136).
- Press the key below the "Change set-up code" symbol (137).
- Enter the set-up code 2-4-1-2 using the keypad (133).

  The set-up code entered is displayed.

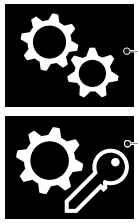

136

137

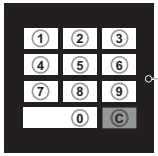

133

When starting the truck for the first time, change the set-up code. The new set-up code must not be the same as the default set-up code or an access code.

- Press the key below the "Delete" symbol (138).

  The set-up code is deleted.

- Enter the new set-up code using the keypad (133).
- Press the key below the "Confirm" symbol (139).

  The new set-up code is displayed.

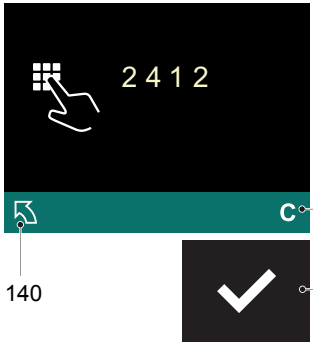

138

140

139

If the new set-up code was entered incorrectly, the procedure can be repeated using the key below the "Delete" symbol (138).

- To return to the main menu, press the key below the "Back" symbol (140).
- Delete the default code, see page 127.
- Create access codes, see page 126.

The keypad is active.

6.3.2 Activating the transponder reader

Procedure

- Release the emergency disconnect switch, see page 88.
- Enter the default code 1-2-3-4 using the keys below the display unit (132).
  The truck is switched on.
- Press the key below the "Settings" symbol (136).
- Press the key below the "Change set-up code" symbol (137).
- Enter the set-up code 2-4-1-2 using the keys below the display unit (132).
  The set-up code entered is displayed.
- Press the key below the "Delete" symbol (138).
  The set-up code is deleted.
- Hold a transponder in front of the transponder reader (134).
  This transponder thus becomes the set-up transponder.
- Press the key below the "Confirm" symbol (139).
  The code for the set-up transponder is displayed.

➔ *If the wrong transponder has been used, the procedure can be repeated using the key below the "Delete" symbol (138).*

- To return to the main menu, press the key below the "Back" symbol (140).

➔ The default code can no longer be used and must be deleted.

- Delete the default code, see page 137.
- Add new transponders, see page 136.

The transponder reader is now active.

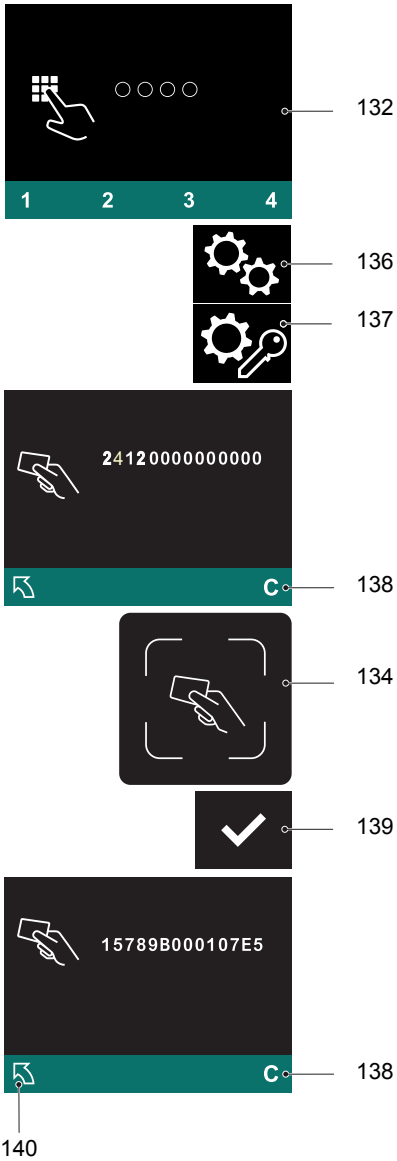

6.4 Using the Display:

6.4.1 Switch on the truck with the access code.

Procedure

- Release the emergency disconnect switch, see page 88.
- Enter the access code with the buttons below the display (132).

The truck is switched on.

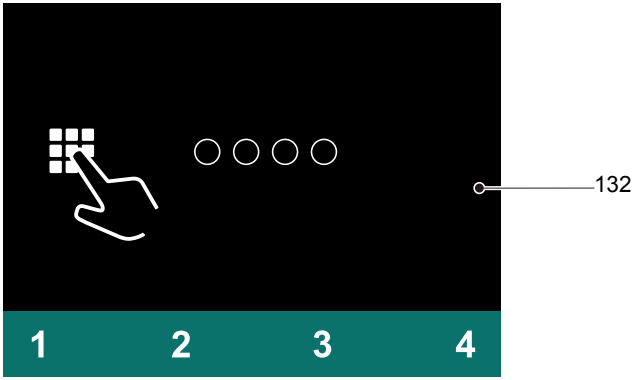

6.4.2 Switching off the truck

Procedure

- Press the key under the "Switch off" symbol (141) in the display unit.
- Press the Emergency Disconnect switch, see page 88.

The truck is switched off.

6.4.3 Changing the Set-up Code

Requirements

– The truck is switched on, see page 124.

Procedure

- Press the key below the "Settings" symbol (136).
- Press the key below the "Change set-up code" symbol (137).
- Enter the set-up code using the keys below the display unit (132).

  The set-up code entered is shown as filled-in circles.

- Press the key below the "Delete" symbol (138).

  The set-up code is deleted.

- Enter the new set-up code using the keys below the display unit (132).

  The new set-up code must be different from existing access codes.

- Press the key below the "Confirm" symbol (139).

  The new set-up code is displayed.

  If the new set-up code has been entered incorrectly, delete it and add a set-up code again.

- To return to the main menu, press the key below the "Back" symbol (140).

The set-up code has been changed.

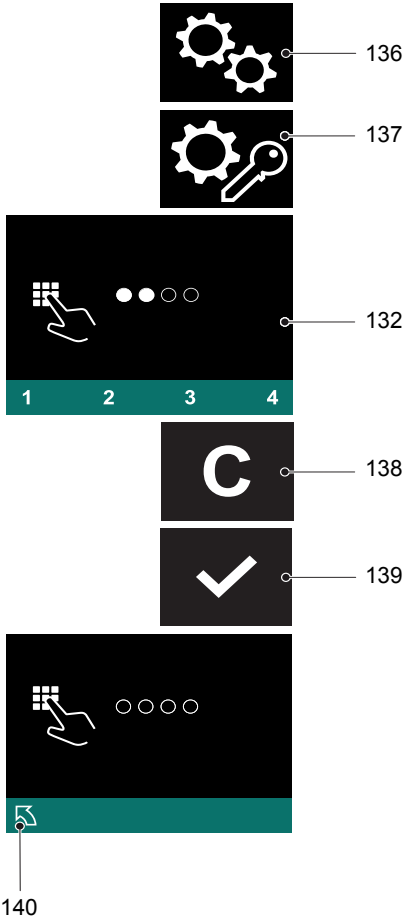

6.4.4 Adding a new access code

Requirements

– The truck is switched on, see page 124.

Procedure

- Press the key below the "Settings" symbol (136).
- Press the key below the "Edit access code" symbol (142).

  The set-up code is requested.

- Enter the set-up code using the keys below the display unit (132).

  All the access codes are displayed.

- Press the key below the "Add" symbol (143).
- Enter the new access code using the keys below the display unit (132).

  The new access code must be different from existing access codes.

- Press the key below the "Confirm" symbol (139).

  The new access code is displayed.

  If the new access code has been entered incorrectly, delete it, see page 127, and add an access code again.

- To return to the main menu, press the key below the "Back" symbol (140).

A new access code has been added.

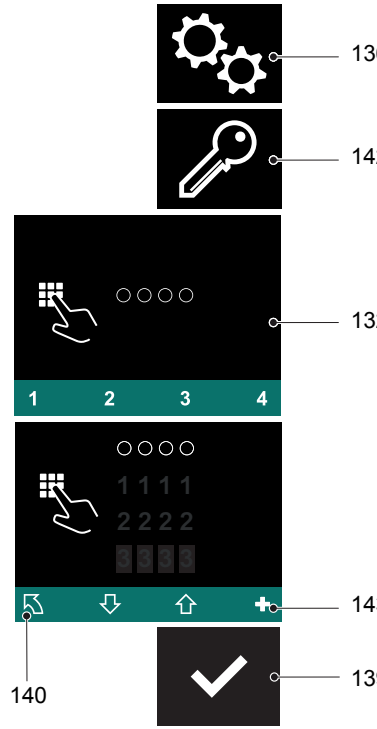

6.4.5 Deleting an access code

Requirements

– The truck is switched on, see page 124.

Procedure

- Press the key below the "Settings" symbol (136).
- Press the key below the "Edit access code" symbol (142).
  The set-up code is requested.
- Enter the set-up code using the keys below the display unit (132).
  All the access codes are displayed.
- Select the access code to be deleted using the key below the "Down selection" symbol (144).
- Press the key below the "Delete" symbol (138).
  The access code has been deleted.
- To return to the main menu, press the key below the "Back" symbol (140).

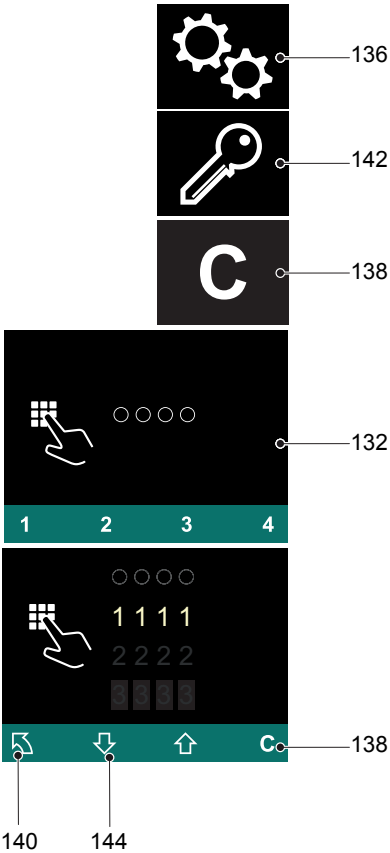

Item	Description
132	Display unit (EasyAccess Softkey): – Description, see page 68 – Entry of 4-digit set-up and access codes – Up to 10 access codes can be stored – For set-up and access codes with the numbers 1 to 4
133	Keypad (EasyAccess PINCode): – Consists of keys 0 to 9 and C (clear) – Entry of 4-digit set-up and access codes – Up to 100 access codes can be stored
134	Transponder reader (EasyAccess Transponder): – Up to 100 transponders can be stored

Item	Description
135	ISM Online: – If the truck is equipped with an ISM Online access module, see "ISM Online Access Module" operating instructions.

6.4.6 Displaying the Log-in History (Display Unit)

The use of the last different access codes is displayed during the log-in process. The last log-in is displayed first.

If multiple access codes are logged as being displayable simultaneously, the display area can be moved by scrolling forward or back.

Requirements

– The truck is switched on, see page 124.

Procedure

- Press the key below the "Settings" symbol (136).
- Press the key below the "Log-in process" symbol (145).
- Enter the set-up code using the keys below the display unit (132).

  The set-up code entered is shown as filled-in circles.

- To scroll forward, press the button under the "Down selection" symbol (144) as many times as necessary.

  The display area moves: Additional earlier log-ins are displayed.

- To scroll back, press the button under the "Up selection" symbol (146) as many times as necessary.

  The display area moves: More recent log-ins are displayed.

- To return to the main menu, press the key below the "Back" symbol (140).

The log-in process is displayed.

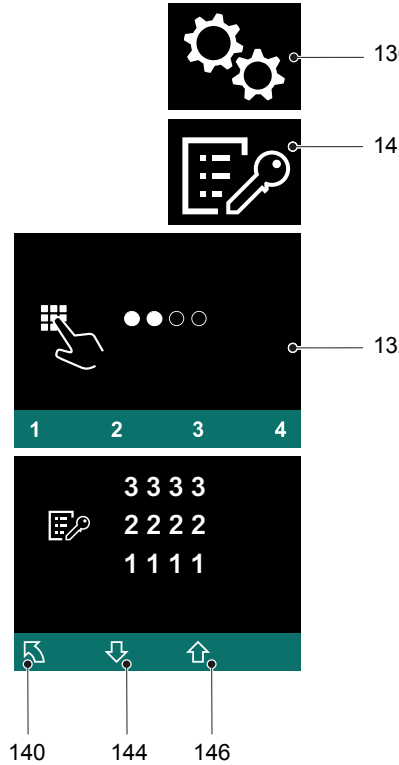

6.5 Using the Keypad

6.5.1 Switch on the truck with the access code.

Procedure

- Release the emergency disconnect switch, see page 88.
- Enter the access code with the keypad (133).

The truck is switched on.

133

6.5.2 Switching off the truck

Procedure

- Press the key under the "Switch off" symbol (141) in the display unit.
- Press the Emergency Disconnect switch, see page 88.

The truck is switched off.


141

6.5.3 Changing the Set-up Code

Requirements

– The truck is switched on, see page 129.

Procedure

- Press the key below the "Settings" symbol (136).
- Press the key below the "Change set-up code" symbol (137).
- Enter the set-up code using the keypad (133).

  The set-up code entered is shown in the display unit (132) as filled-in circles.

- Press the key below the "Delete" symbol (138).

  The set-up code is deleted.

- Enter the new set-up code using the keypad (133).

  The new set-up code must be different from existing access codes.

- Press the key below the "Confirm" symbol (139).

  The new set-up code is displayed.

  If the new set-up code has been entered incorrectly, delete it and enter the correct set-up code.

- To return to the main menu, press the key below the "Back" symbol (140).

The set-up code has been changed.

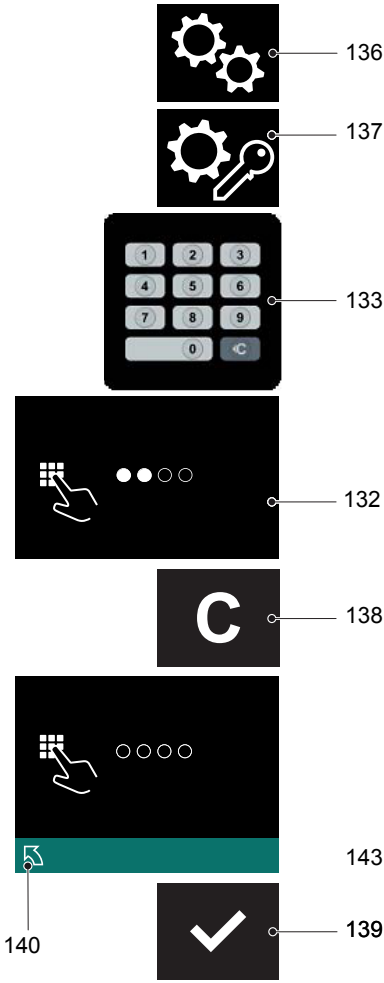

6.5.4 Adding a new access code

Requirements

– The truck is switched on, see page 129.

Procedure

- Press the key below the "Settings" symbol (136).
- Press the key below the "Edit access code" symbol (142).
  The set-up code is requested.
- Enter the set-up code using the keypad (133).
  All access codes are shown on the display unit (132).
- Press the key below the "Add" symbol (143).
- Enter a new access code using the keypad (133).

  The new access code must be different from existing access codes.
- Press the key below the "Confirm" symbol (139).
  The new access code is shown on the display unit (132).

  If the new access code has been entered incorrectly, delete it, see page 132, and enter the correct access code.
- To return to the main menu, press the key below the "Back" symbol (140).

A new access code has been added.

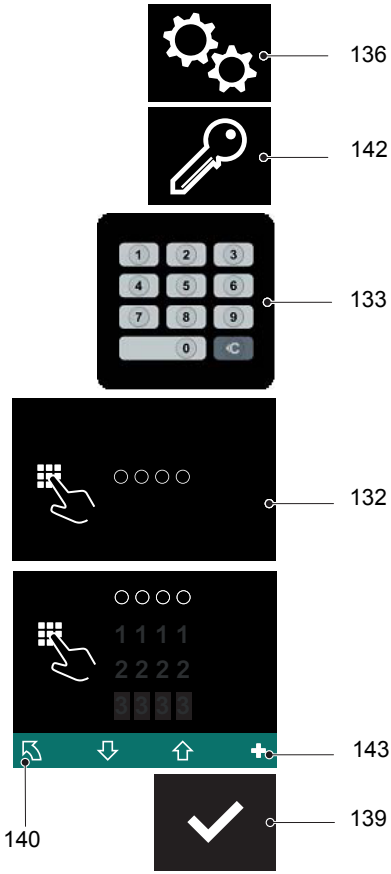

6.5.5 Deleting an access code

Requirements

– The truck is switched on, see page 129.

Procedure

- Press the key below the "Settings" symbol (136).
- Press the key below the "Edit access code" symbol (142).
  The set-up code is requested.
- Enter the set-up code using the keypad (133).
  All access codes are shown on the display unit (132).
- Select the access code to be deleted using the key below the "Down selection" symbol (144).
- Press the key below the "Delete" symbol (138).
  The access code has been deleted.
- To return to the main menu, press the key below the "Back" symbol (140).

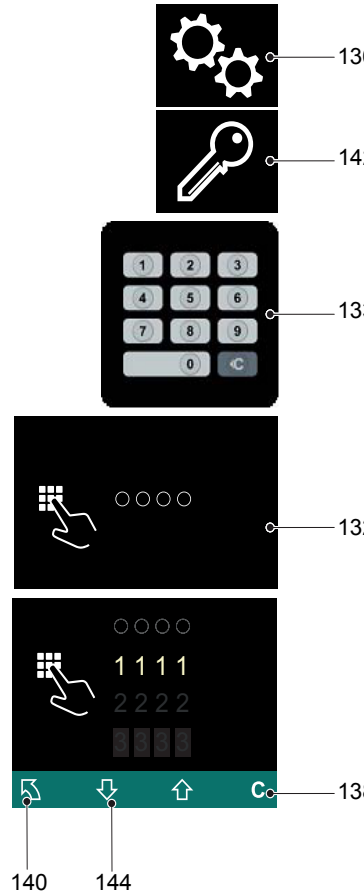

6.5.6 Displaying the Log-in History (Keypad)

The use of the last different access codes is displayed during the log-in process. The last log-in is displayed first.

➔ If multiple access codes are logged as being displayable simultaneously, the display area can be moved by scrolling forward or back.

Requirements

– The truck is switched on, see page 129.

Procedure

- Press the key below the "Settings" symbol (136).
- Press the key below the "Log-in process" symbol (145).
- Enter the set-up code using the keypad (133).

  The set-up code entered is shown in the display unit (132) as filled-in circles.

- To scroll forward, press the button under the "Down selection" symbol (144) as many times as necessary.

  The display area moves: Additional earlier log-ins are displayed.

- To scroll back, press the button under the "Up selection" symbol (146) as many times as necessary.

  The display area moves: More recent log-ins are displayed.

- To return to the main menu, press the key below the "Back" symbol (140).

The log-in process is displayed.

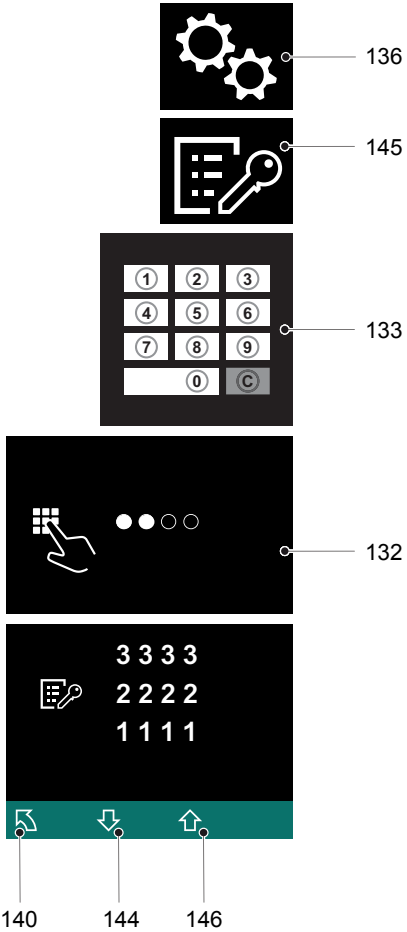

6.6 Operating the transponder reader

NOTE

Take care not to damage the transponder. If the transponder is damaged, the truck cannot be switched on.

6.6.1 Switching on the truck with the transponder

Procedure

- Release the Emergency Disconnect switch, see page 88.
- Hold the transponder in front of the transponder reader (134).

  A green tick appears and remains until the transponder has been confirmed. If there is no confirmation within 20 seconds the access prompt appears.

- Press the button below the "Confirm" symbol (139).

The truck is switched on.

6.6.2 Switching off the truck

Procedure

- Press the key under the "Switch off" symbol (141) in the display unit.
- Press the Emergency Disconnect switch, see page 88.

The truck is switched off.

6.6.3 Changing the Set-up Transponder

Requirements

– The truck is switched on, see page 134.

Procedure

- Press the key below the "Settings" symbol (136).
- Press the key below the "Change set-up code" symbol (137).
- Place the set-up transponder on the transponder reader (134).

  The code of the set-up transponder is shown on the display unit (132).

- Press the key below the "Delete" symbol (138).

  A dashed line is shown.

- Place the new set-up transponder on the transponder reader (134).

➔ The new set-up transponder code must be different from existing transponder codes.

- Press the key below the "Confirm" symbol (139).

  The new code for the set-up transponder is displayed.

➔ If the wrong transponder has been used, the procedure can be repeated using the key below the "Delete" symbol (138).

- To return to the main menu, press the key below the "Back" symbol (140).

The set-up transponder has been changed.

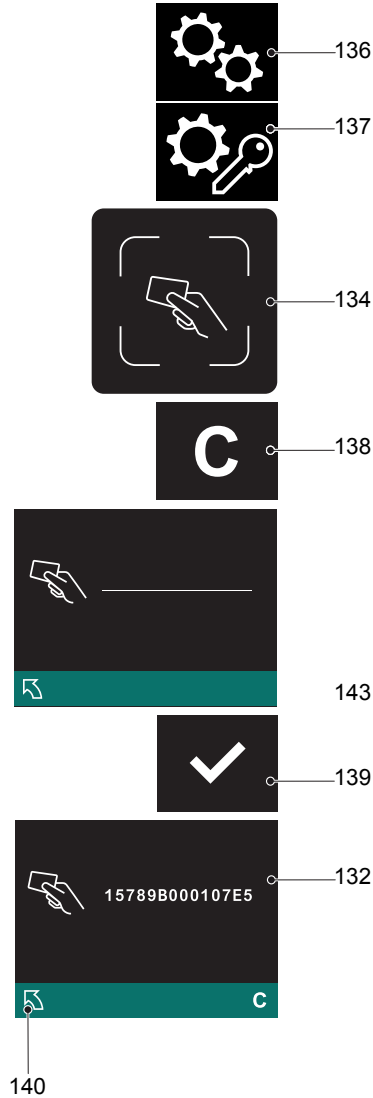

6.6.4 Adding a new transponder

Requirements

– The truck is switched on, see page 134.

Procedure

- Press the key below the "Settings" symbol (136).
- Press the key below the "Edit transponder" symbol (142).

  The set-up transponder is requested.

- Place the set-up transponder on the transponder reader (134).

  All transponder codes are shown on the display unit (132).

- Press the key below the "Add" symbol (143).
- Place the new transponder on the transponder reader (134).

  The new transponder code must be different from existing transponder codes.

- Press the key below the "Confirm" symbol (139).

  The new transponder code is displayed.

  If the wrong transponder has been used, delete it, see page 137, and add a correct transponder.

- To return to the main menu, press the key below the "Back" symbol (140).

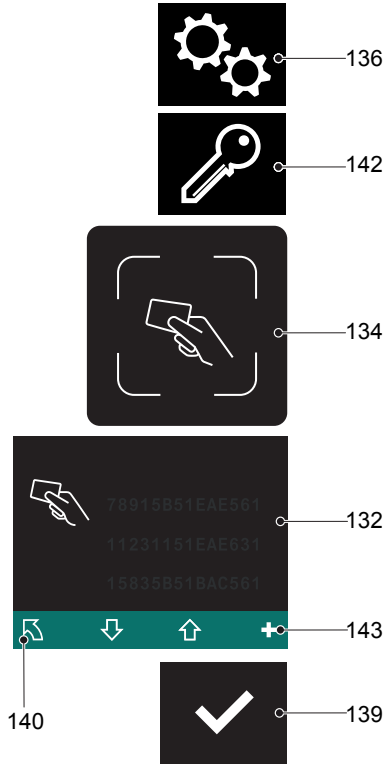

A new transponder has been added.

The transponder codes saved are sorted first of all numerically and then alphabetically.

6.6.5 Deleting transponders

Requirements

– The truck is switched on, see page 134.

Procedure

- Press the key below the "Settings" symbol (136).
- Press the key below the "Edit transponder" symbol (142).
  The set-up transponder is requested.
- Place the set-up transponder on the transponder reader (134).
  All transponder codes are shown on the display unit (132).
- Select the transponder code to be deleted using the key below the "Down selection" symbol (144).
- Press the key below the "Delete" symbol (138).
  The transponder has been deleted.
- To return to the main menu, press the key below the "Back" symbol (140).

6.6.6 Displaying the Log-in History (Transponder Reader)

The use of the last different transponders is displayed during the log-in process. The last log-in is displayed first.

➔ If multiple transponders are logged as being displayable simultaneously, the display area can be moved by scrolling forward or back.

Requirements

– The truck is switched on, see page 129.

Procedure

- Press the key below the "Settings" symbol (136).
- Press the key below the "Log-in process" symbol (145).
- Place the set-up transponder on the transponder reader (134).
- To scroll forward, press the button under the "Down selection" symbol (144) as many times as necessary.

  The display area moves: Additional earlier log-ins are displayed.

- To scroll back, press the button under the "Up selection" symbol (146) as many times as necessary.

  The display area moves: More recent log-ins are displayed.

- To return to the main menu, press the key below the "Back" symbol (140).

The log-in process is displayed.

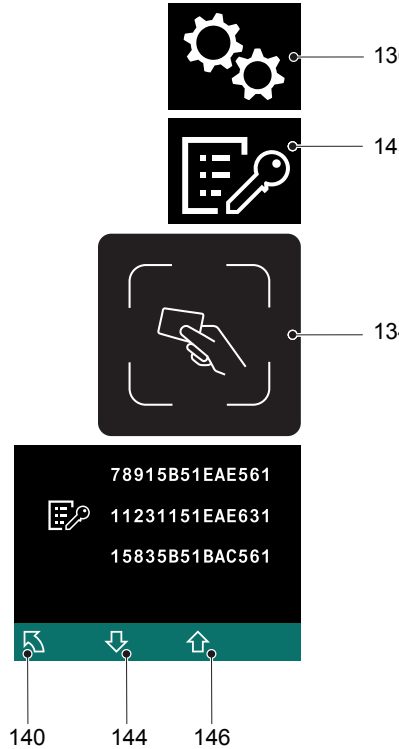

6.7 Assistance systems

Travel conduct

The operator must adapt the travel speed to local conditions. The truck must be driven at slow speed when negotiating bends or narrow passageways, when passing through swing doors and at blind spots. The operator must always observe an adequate braking distance between the forklift truck and the vehicle in front and must be in control of the truck at all times. Abrupt stopping (except in emergencies), rapid U turns and overtaking at dangerous or blind spots are not permitted. Do not lean out or reach beyond the working and operating area.

6.7.1 Drive Control (○)

The Drive Control option activates the crawl speed automatically after the transition from free lift to mast lift. This limits both the maximum travel speed and the acceleration.

➔ The reduced travel speed can be set within a range of 0,4 m/s to 1,9 m/s.

6.7.2 Lift Control (○)

The Lift Control option maximises the speeds for the mast traverse depending on the lift height and the load weight.

6.7.3 Curve Control (○)

The Curve Control option assists the operator in handling the truck. When cornering, the maximum travel speed is adapted to the steer angle.

➔ The default setting can be changed by the manufacturer's customer service department

6.7.4 ISM access module (○)

➔ If the truck is equipped with an ISM access module refer to the “ISM Access Module” operator manual.

6.7.5 Warehouse Control (○)

The Warehouse Control option acts as an interface to the (Warehouse Management System).

– Order entry via WMS
– Querying the status of an order
– Querying truck statuses

6.7.6 Position Control (○)

➔ If the truck is equipped with Position Control, refer to the "Rack Height Select" operating instructions.

6.7.7 Rack Height Select (○)

➔ If the truck is equipped with Rack Height Select, refer to the "Rack Height Select" operating instructions.

6.8 Work lights

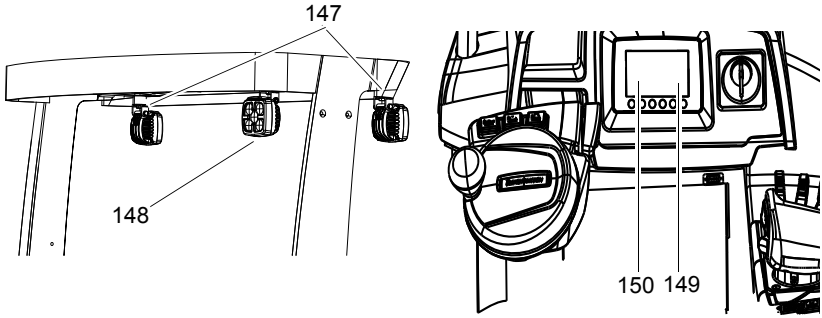

➔ The work lights are fitted with a pivot that can swivel in all directions.

➔ The button (150) switches the work lights (148) in the drive direction on or off. The button (149) switches the work lights (147) in the fork direction on or off. As an option, the work lights can be controlled as a function of the travel direction.

Switching the work lights on and off

Procedure

- Press the work light button (150, 149).

The work lights are switched on / off.

6.9 Camera system

⚠ CAUTION!

Accident risk from hidden work areas

▶ The camera system acts as an aid to assist safe operation.

▶ Practice travelling and working with the camera system.

▶ Align the camera so that the hidden work area can be seen.

The camera is secured to the inside of the right fork. The camera image is displayed via a monitor fitted to the overhead guard. If a fork positioner is attached, the camera system will be equipped with a wide angle camera.

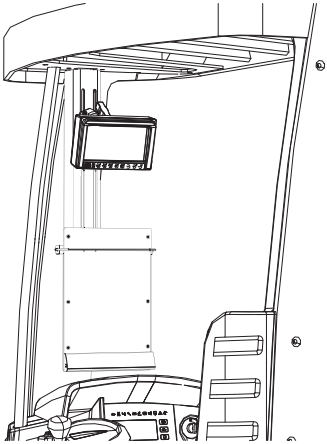

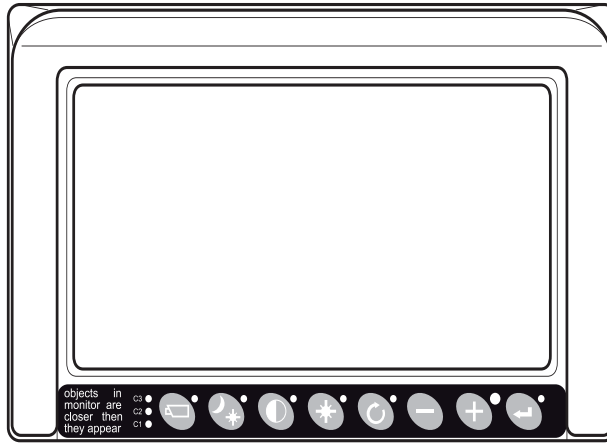

151 152 153 154 155 156 157 158

Item		Component	Function
151		Camera selection	Selects a camera manually. The LED next to the key indicates that camera selection is activated. Press the key again to switch the camera display.
152		Day/night setting	Press the key to change between ABC mode, day and night setting.
153		Contrast	Press the key to activate the setting module. The desired contrast can be set with the plus and minus keys.
154		Brightness	Press the key to activate the setting module. The desired brightness can be set with the plus and minus keys.
153+ 154		Saturation	Press the contrast and brightness keys simultaneously to activate the setting mode. The saturation can be set with the plus and minus keys.
155		Previous menu	When you press the key the monitor shows the previous menu item.
156		Minus	Press the key to change to the next menu item or to move left in the selection.

Item		Component	Function
157		Plus	Press the key to change to the previous menu item or to move right in the selection.
158		Enter	When you press the key the system switches to standby or the option selected in the menu is activated.

6.9.1 Service Menu

Opening the service menu

Procedure

- Press the (151), (156), (157) keys simultaneously.

6.9.2 Camera settings

Opens the camera settings

Requirements

– The service panel is open.

Procedure

- Open the camera settings with the (151) key.
- Select the camera settings with the (156) and (157) keys.
- Confirm with the (158) key.
- Select the digit to be changed with the (156) and (157) keys.
- Switch digit or change the digit with the (158) key. If necessary set the desired digit with the (156) and (157) keys.

6.9.3 System settings

Opens the system settings

Requirements

– The service panel is open.

Procedure

- Select the system settings with the (156) and (157) keys.
- Confirm with the (158) key.

6.9.4 Keypad block

Deactivates the keypad

Requirements

– System settings are open.

Procedure

- Select the keypad with the (156) and (157) keys and confirm with (158).
- Select the keypad block with the (156) and (157) keys and confirm with (158).
- In the settings menu select the required keypad block.

6.9.5 User menu

Opens the user menu

Requirements

– The keypad block is deactivated.

Procedure

- Press the (156) and (157) keys simultaneously.

6.10 Beacon

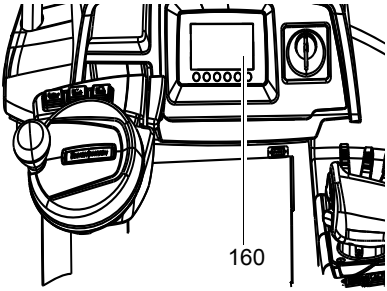

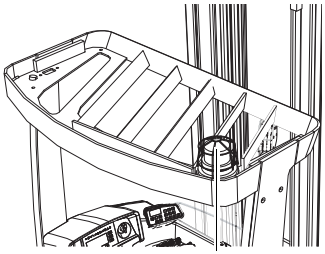

Switching the beacon on and off

Procedure

- Press the beacon button (160).

The beacon is switched on / off.

6.11 Lift Height Cut-off (○)

The height cut out feature is an electrical height restriction to limit the maximum lift height in the mast lift range. The cut out height is defined by a magnet (162). If the switch (161) and magnet (162) are at the same height, the pump motor cuts out and lifting is disabled.

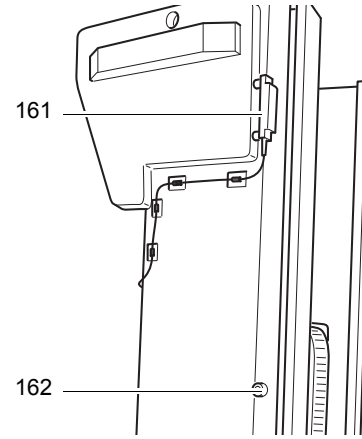

➔ The magnetic switch on the mast is not present with the rack height select option (○) or the Operation Control option (○).

Overriding the lift limit cutout without the override button

Procedure

- Set the SOLO-PILOT lever (122) or MULTI-PILOT (123) to neutral.
- Pull the SOLO-PILOT lever (122) or MULTI-PILOT (123) in direction H, see page 97

The lift limit cutout is now overridden. Lifting can now be performed at reduced speed.

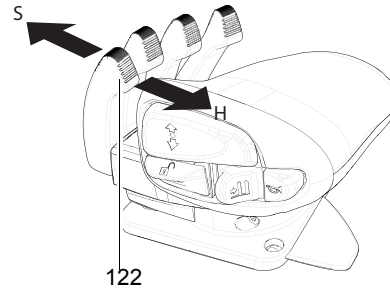

Overriding the lift limit cutout with the override button

Procedure

- Press the lift limit override button (83) while simultaneously pulling the SOLO-PILOT lever (122) or MULTI-PILOT (123) in direction H, see page 97.

The lift limit cutout is now overridden. Lifting can now be performed at reduced speed.

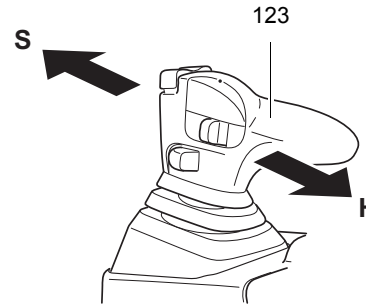

6.12 Electric lift limit

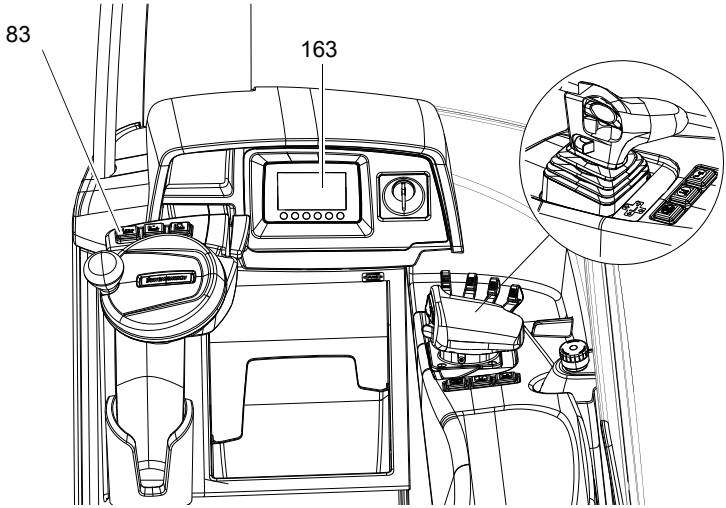

ESA (German: End-Schalter-Anlage) stands for lift limit system and is available in version ESA 2. The aim of the lift limit system is to prevent damage to the truck and the load near the wheel arms due to incorrect operation.

6.12.1 Lift limit 2

Lift limit 2 is available for trucks with an integrated side shift and various attachments, such as fork positioner and ball clamps.

Operation

Lift limit 2 determines the position of the mast and forks via sensors in the mast. If the mast is fully extended or if the forks are outside the safety range (500 - 600 mm above the wheel arms), Lift Limit 2 releases all hydraulic functions.

Sideshift, mast reach, lowering and the hydraulic accessory functions are deactivated if the mast is not fully extended or if the load is near the wheel arms.
If the mast is fully extended and the load is near the wheel arms, only mast reach is inhibited, the mast cannot be retracted.
Lifting and tilting are never inhibited.

Releasing hydraulic functions with the override button

Requirements

– The function selected is inhibited. The mast or forks are in the safety range.

Procedure

- Press the Lift Limit override button (83) while simultaneously performing the selected function.

The hydraulic functions are released for as long as the button is pressed.

Releasing hydraulic functions without the override button

Requirements

– The function selected is inhibited. The mast or forks are in the safety range.

Procedure

- Set the control (SOLO-PILOT or MULTI-PILOT) to neutral.
- Set the control (SOLO-PILOT or MULTI-PILOT) back to its original direction.
  Only the originally applied function is released, at reduced speed.
- Repeat this procedure separately for each function.

The hydraulic function is released.

6.13 Forks horizontal button

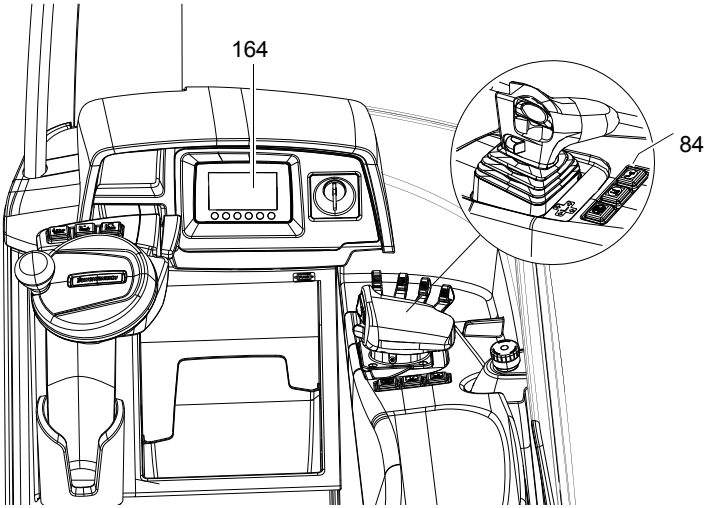

Item	Description
84	"Forks horizontal" button
164	"Forks horizontal" display

	Horizontal tilt	Positioning of the forks in the horizontal position

The forks horizontal button (84) allows the load handler to be aligned horizontally

Aligning the load handler horizontally

Procedure

- Press the forks horizontal button (84) until the load handler is aligned horizontally. During this procedure all other hydraulic functions are disabled and the display shows "forks horizontal" (164).

The load handler is aligned horizontally.

6.14 “Clamp function release” button

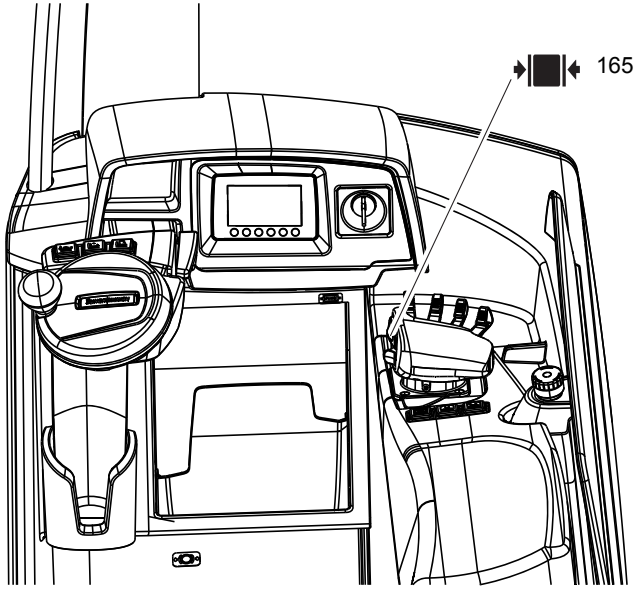

Item	Description
165	"Clamp-function release" button

When the "Clamp function release" button is pressed and the corresponding hydraulic function applied simultaneously, the clamp function is activated.

➔ The auxiliary hydraulic function must be actuated within 1.5 seconds of the acknowledgement button being pressed.
(see page 104)

6.15 Weigher

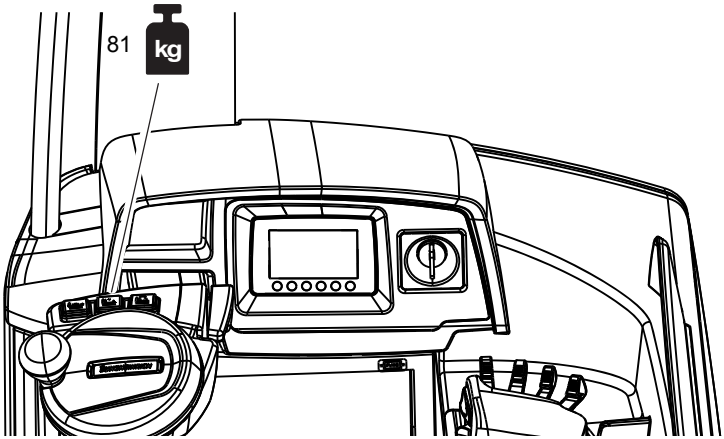

Item	Description
81	"Weigher" button

While the weigher button (81) is pressed, the load is raised approx. 1010 cmcm and then lowered again. This process determines the load weight which is then shown on the driver's display. The weigher function is not a substitute for a calibrated weigher. The weigher function must not be used to lift the load freely. All other hydraulic operations are inhibited during weighing.

Weighing the load

Procedure

- Press and hold down on the weigher button (81) until weighing is completed.

  If the button is released before weighing is completed, the weighing procedure is interrupted and no valid readings are obtained. The display shows "- - - - kg".

The load is weighed and shown on the display.

6.16 Load handler work lights LED

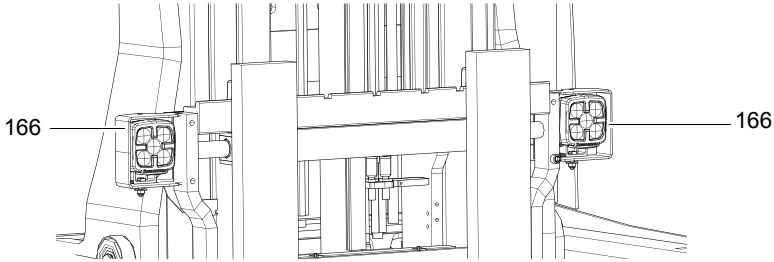

Item	Component
166	Load handler work lights LED

➔ Load handler work lights LEDs are available for trucks that work with a sideshifter.

The LED work lights on the load handler are

– switched on automatically when a hydraulic function is activated and the travel speed is less than 8 km/h.
– switched off when a hydraulic function is inactive and the travel speed is greater than 4 km/h for t > 2 s.
– switched off when a hydraulic function is inactive for t > 5 min.

6.17 Removable load backrest

⚠ CAUTION!

Trapping hazard and heavy load backrest weight

▶ Wear safety gloves and safety shoes when carrying out this operation.

▶ Two people are required to remove and attach the load backrest.

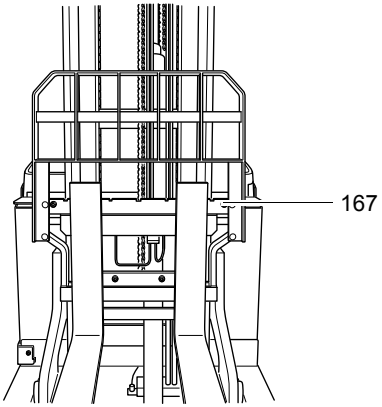

Load backrest disassembly

Procedure

- Loosen the screws (167).
- Remove the load backrest from the fork carriage and put it down securely.
- Fit the fork retaining screws.

Load backrest assembly

Procedure

- Attach the load backrest to the top rail of the fork carriage.
- Fit the bolts and tighten them with a torque wrench.
  Tightening torque = 85 Nm

6.18 Operation Control

Operation Control is an assistance system. It maps the truck's capacity plates and informs the operator when the truck's capacity limit has been reached.

⚠ CAUTION!

Operation Control is an assistance system that only works within tolerance levels. The capacity plate data is always binding for the operator.

Operation

During lifting, when the load comes within less than 1000 mm of the maximum lift height indicated on the capacity plate, the "tip limit reached" symbol (168) flashes on the display and an audible signal sounds. As the load continues towards the maximum lift height, the interval of the audible signal reduces and the "tip limit reached" symbol (168) flashes more rapidly.

The load centre selected appears on the "load centre" display (93). Each capacity plate covers different load centres. Up to 3 load charts may be attached to the truck at the factory, e.g. basic truck capacity, attachment capacity and min./max. capacity when using telescopic forks. The load charts are marked with corresponding letters (169).

➔ Loads with a weight < 100 kg cannot be reliably detected by the system.

The load centre is moved in the load direction or the drive direction using the softkeys listed here.

	Operation Control menu	Switches to the Operation Control menu
	Operation Control Load direction	Moves the load centre in the load direction
	Operation Control Drive direction	Moves the load centre in the drive direction

168

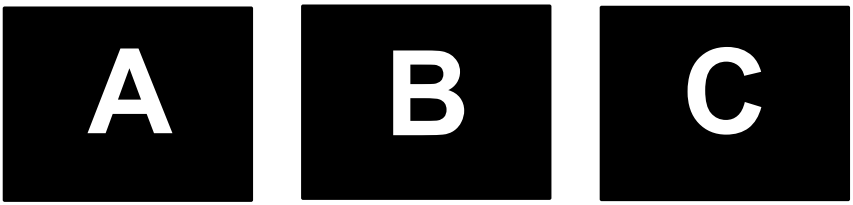
A
B
C

169

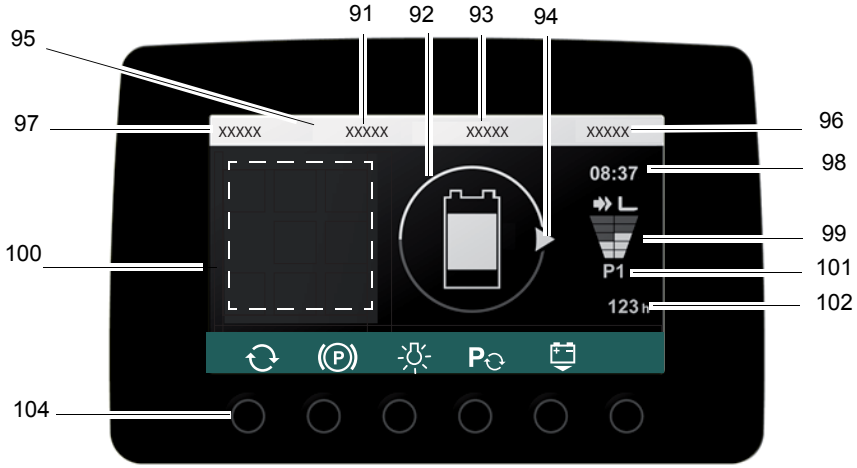
91
92
93
94
95
97
96
98
99
100
101
102
104
XXXXX
XXXXX
XXXXX
XXXXX
08:37
P1
123 h

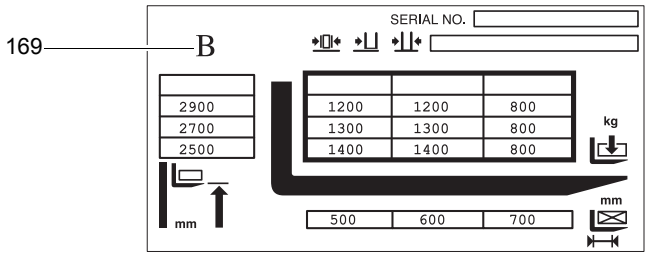
169
B
SERIAL NO.
2900
2700
2500
mm
1200
1200
800
1300
1300
800
1400
1400
800
kg
500
600
700
mm

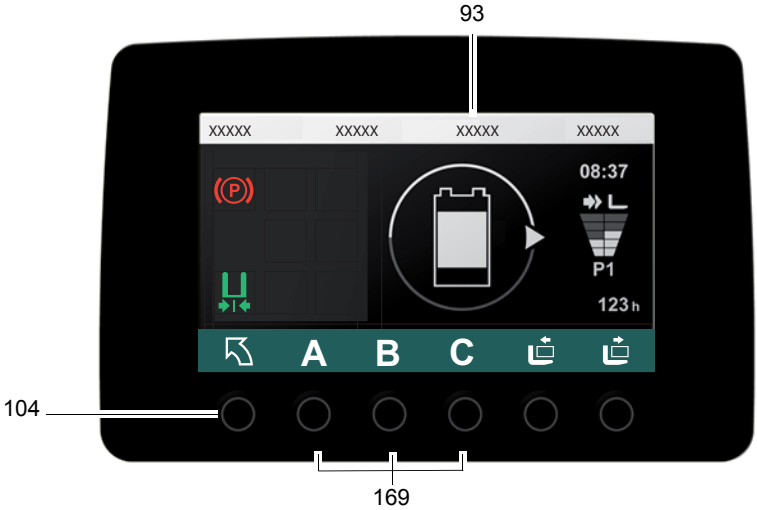
93
XXXXX
XXXXX
XXXXX
XXXXX
08:37
P1
123 h
A
B
C
104
169


93
XXXXX
XXXXX
XXXXX
XXXXX
08:37
P1
123 h
104
170

Setting the load centre

⚠ DANGER!

An incorrectly set load centre poses a risk of tipover

If the load centre is set too low, the warning will not sound in time. This may endanger the operational stability of the truck, causing it to tip over.

▶ Set the correct load centre.

Procedure

- Record the letters of the capacity plate according to the attachment.
- Select the load centre that is relevant to the current stacking operation. To do this:
  - Press the program key (104).
  - Press the Operation Control menu (170).
  - Press program button A, B or C (169).
- The load centre selected appears in the "load centre" display (93).

The load centre is set.

Troubleshooting

Failure of the lift height sensor or the pressure sensor and calculation inconsistencies can cause the Operation Control assistance system to fail. If the Operation Control assistance system fails, the load distance symbol and "-----" are shown instead of the load centre on the driver's display. An event message is displayed.

6.19 Floor spot

The floor spot serves as an auxiliary device and, with the travel direction switch engaged, projects a coloured dot on the floor at a distance of 4,5 m / 4 m.
When the truck travels forward the coloured dot is in front of the truck and when reversing it is behind the truck.

⚠ CAUTION!

Risk of accident due to impaired eyesight

Looking directly at the LED light can dazzle and temporarily impair eyesight.

▶ Do not look directly at the LED light.

▶ Practice travelling and working with the floor spot carefully.

▶ Do not change the factory setting.

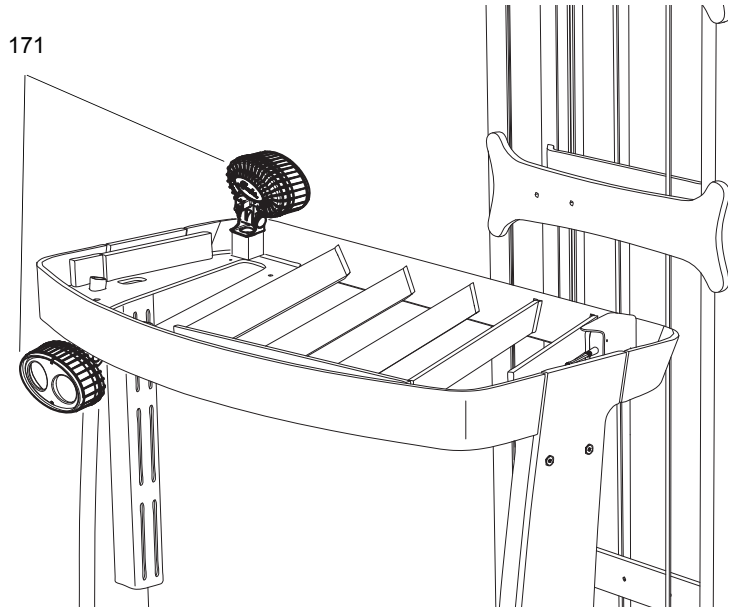

The floor spot (171) is available both in the drive direction underneath the overhead guard and in the load direction above the overhead guard.

The position of the projected floor spot is factory pre-set.

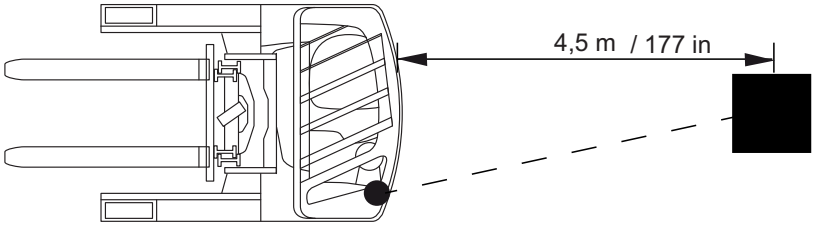
4,5 m / 177 in

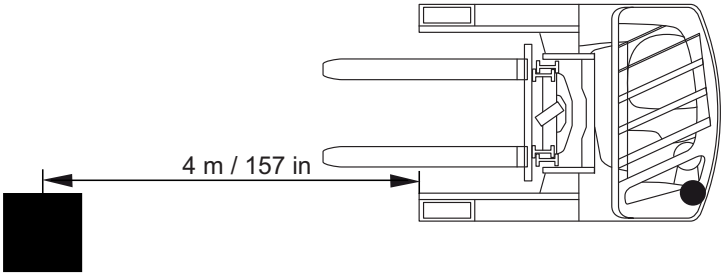
4 m / 157 in

F Industrial Truck Maintenance

1 Operational Safety and Environmental Protection

The checks and servicing operations contained in this chapter must be performed in accordance with the maintenance checklist service intervals.

⚠ WARNING!

Risk of accidents and damage to components

Any modification to the truck, in particular the safety mechanisms, is prohibited. Do not alter the truck's operating speeds under any circumstances.
Do not bond the front window with adhesive.

Exception: Operating companies should only make changes or have changes made to powered industrial trucks if the manufacturer is no longer operating in the field and there is no successor to the business; operating companies must however:

– Ensure that the changes to be made are planned, tested and performed by a specialist engineer in industrial trucks taking safety into account.
– Keep permanent graphic records of the plans, tests and completion of the changes
– Carry out and have authorised the respective changes to the capacity data plates, decals and stickers as well as the operator and service manuals.
– Attach permanent and clearly visible marking to the truck indicating the types of changes made, the date of the changes and the name and address of the organisation responsible for the work.

NOTE

Only original spare parts are subject to the manufacturer's quality control. To ensure safe and reliable operation, use only the manufacturer's spare parts.

For safety reasons, only components which have been specially agreed by the manufacturer for this truck may be installed near the computer, controllers and wire guidance sensors (antennae). These components (computers, controllers, wire guidance sensors (antennae)) must therefore not be replaced by similar components from other trucks of the same series.

➔ On completion of inspection and service work, carry out the operations listed in the “Recommissioning the truck after cleaning or maintenance work” section (see page 181).

⚠ WARNING!

Fire hazard

Welding operations on the truck can damage or ignite components.

▶ Do not performing welding operations on the truck.

---

2 Maintenance Safety Regulations

Maintenance personnel

The truck should only be serviced and repaired by the manufacturer's specialist customer service personnel who have been trained to do this. We therefore recommend that you enter into a maintenance contract with the manufacturer’s local sales office.

2.1 Cleaning

⚠ **CAUTION!**

Fire hazard

Do not use flammable liquids to clean the industrial truck.

▶ Disconnect the battery before starting cleaning work.

▶ Carry out all necessary safety measures to prevent sparking before cleaning (e.g. by short-circuiting).

⚠ **CAUTION!**

Risk of electrical system damage

Cleaning the assemblies (controllers, sensors, motors etc.) of the electronic system with water can damage the electrical system.

▶ Do not clean the electrical system with water.

▶ Clean the electrical system with weak suction or compressed air (use a compressor with a water trap) and not a conductive, anti-static brush.

⚠ **CAUTION!**

Risk of component damage when cleaning the truck

Cleaning with a pressure washer can result in malfunctions due to humidity.

▶ Cover all electronic system assemblies (controllers, sensors, motors etc.) before cleaning the truck with a pressure washer.

▶ Do not hold the jet of the pressure washer by the marked points to avoid damaging them (see page 32).

▶ Do not clean the truck with pressurised water.

➔ After cleaning, carry out the operations detailed in "Restoring the truck to service after maintenance and repairs" (see page 181).

2.2 Working on the electrical system

⚠ WARNING!

Electrical current can cause accidents

Ensure the electrical system is de-energised before starting work. The capacitors in the control must be completely discharged. The capacitors are fully discharged approx. 10 minutes after disconnecting the electrical system from the battery.

Before starting maintenance on the electrical system:

- ▶ Only suitably trained electricians may work on the truck's electrical system.
- ▶ Before working on the electrical system, take all precautionary measures to avoid electric shocks.
- ▶ Park the truck securely (see page 111).
- ▶ Disconnect the battery.
- ▶ Remove any rings, metal wristbands etc.

2.3 Consumables and used parts

⚠ CAUTION!

Consumables and used parts are an environmental hazard

Used parts and consumables must be disposed of in accordance with the applicable environmental-protection regulations. Oil changes should be carried out by the manufacturer's customer service department, whose staff are specially trained for this task.

- ▶ Note the safety regulations when handling these materials.

2.4 Tyre type

⚠ WARNING!

The use of tyres that do not match the manufacturer's specifications can result in accidents.

The quality of tyres affects the stability and performance of the truck.

Uneven wear affects the truck's stability and increases the stopping distance.

▶ When replacing tyres make sure the truck is not skewed.

▶ Always replace tyres in pairs, i.e. left and right at the same time.

➔ When replacing rims and tyres fitted at the factory, only use the manufacturer’s original spare parts. Otherwise the manufacturer’s specifications cannot be ensured. If you have any queries contact the manufacturer's customer service department.

2.4.1 Replacing the drive wheel

➔ The drive wheel must only be replaced by the manufacturer’s authorised customer service department.

2.4.2 Replacing the load wheels

➔ Load wheels must only be replaced by the manufacturer’s authorised customer service department.

2.5 Lift Chains

⚠ WARNING!

Non-lubricated and incorrectly cleaned lift chains can cause accidents

Lift chains are safety-critical parts. They must not contain any serious contamination. Lift chains and pivot pins must always be clean and well lubricated.

▶ Lift chains should only be cleaned with paraffin derivatives e.g. petroleum or diesel fuels.

▶ Do not clean lift chains with high pressure jets or chemical cleaning agents.

▶ Immediately after cleaning, dry the lift chain with compressed air and apply a chain spray.

▶ Always lubricate a chain when it is discharged.

▶ Lubricate a lift chain with particular care around the pulleys.

2.6 Hydraulic system

NOTE

Testing and replacing hydraulic hoses

Hydraulic hoses can become brittle through age and must be checked at regular intervals. The application conditions of the industrial truck have a considerable impact on the ageing of the hydraulic hoses.

- ▶ Check the hydraulic hoses at least annually and replace if necessary.
- ▶ If the operating conditions become more arduous the inspection intervals must be reduced accordingly.
- ▶ In normal operating conditions a precautionary replacement of the hydraulic hoses is recommended after 6 years. The owner must carry out a risk assessment to ensure safe, prolonged use. The resulting protection measures must be observed and the inspection interval reduced accordingly.

⚠ **WARNING!**

Leaky hydraulic systems can result in accidents

Hydraulic oil can escape from leaky and faulty hydraulic systems.

- ▶ Report any defects immediately to your supervisor.
- ▶ Mark defective truck and take out of service.
- ▶ Do not return the industrial truck to service until you have identified and rectified the fault.
- ▶ Remove any spilled hydraulic immediately with an appropriate bonding agent.
- ▶ The bonding agent / consumable mixture must be disposed of in accordance with regulations.

⚠ **WARNING!**

Faulty hydraulic hoses can result in injury and infection

Pressurised hydraulic oil can escape from fine holes or hairline cracks in the hydraulic hoses. Brittle hydraulic hoses can burst during operation. People standing near the truck can be injured by the hydraulic oil.

- ▶ Call for a doctor immediately in the event of an injury.
- ▶ Do not touch pressurised hydraulic hoses.
- ▶ Report any defects immediately to your supervisor.
- ▶ Mark defective truck and take it out of service.
- ▶ Do not return the industrial truck to service until you have identified and rectified the fault.

---

3 Lubricants and Lubrication Schedule

3.1 Handling consumables safely

Handling consumables

Consumables must always be handled correctly. Follow the manufacturer's instructions.

⚠ WARNING!

Improper handling is hazardous to health, life and the environment

Consumables can be flammable.

- ▶ Keep consumables away from hot components and naked flames.
- ▶ Always keep consumables in prescribed containers.
- ▶ Always fill consumables in clean containers.
- ▶ Do not mix up different grades of consumable. The only exception to this is when mixing is expressly stipulated in the operating instructions.

⚠ CAUTION!

Spilled consumables can cause slipping and endanger the environment

Risk of slipping from spilled consumables. The risk is greater when combined with water.

- ▶ Do not spill consumables.
- ▶ Spilled consumables must be removed immediately with an appropriate bonding agent.
- ▶ The bonding agent / consumable mixture must be disposed of in accordance with regulations.

⚠ WARNING!

Improper handling of oils can be hazardous

Oils (chain spray / hydraulic oil) are flammable and poisonous.

- ▶ Dispose of used oils in accordance with regulations. Store used oil safely until it can be disposed of in accordance with regulations.
- ▶ Do not spill oil.
- ▶ Spilled oils must be removed immediately with an appropriate bonding agent.
- ▶ The mixture consisting of the bonding agent and oil must be disposed of in accordance with regulations.
- ▶ Observe national regulations when handling oils.
- ▶ Wear safety gloves when handling oils.
- ▶ Prevent oil from coming into contact with hot motor parts.
- ▶ Do not smoke when handling oil.
- ▶ Avoid contact and digestion. If you swallow oil do not induce vomiting but seek medical assistance immediately.
- ▶ Seek fresh air after breathing in oil fumes or vapours.
- ▶ If oil has come into contact with your skin, rinse your skin with water.
- ▶ If oil has come into contact with your eyes, rinse them with water and seek medical assistance immediately.
- ▶ Replace oil-soaked clothing and shoes immediately.

⚠ CAUTION!

Consumables and used parts are an environmental hazard

Used parts and consumables must be disposed of in accordance with the applicable environmental-protection regulations. Oil changes should be carried out by the manufacturer's customer service department, whose staff are specially trained for this task.

- ▶ Note the safety regulations when handling these materials.

3.2 Lubrication Schedule

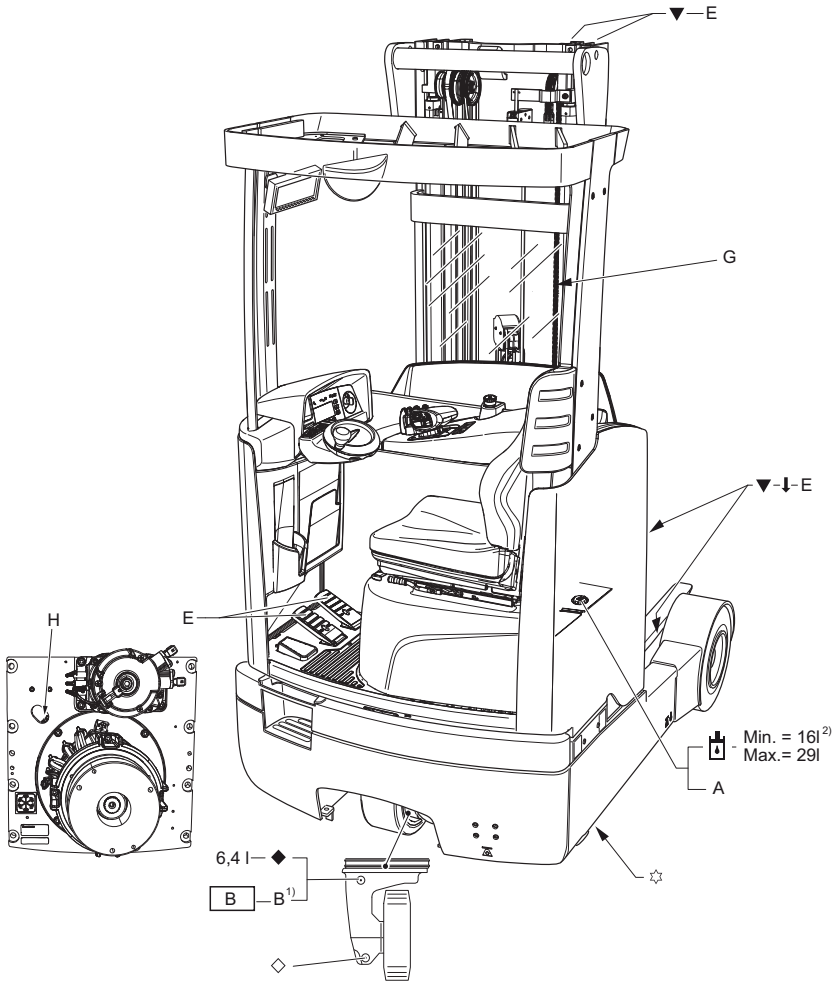

▼	Contact surfaces	☼	Hydraulic oil drain plug
⬇	Grease nipple	◆	Transmission oil filler neck
	Hydraulic oil filler neck	◇	Transmission oil drain plug

1 Compound ratio for cold store usage 1:1

2 Capacity, see page 173.

3.3 Consumables

Code	Order no.	Package quantity	Component	Used for
A	51 132 827*	5.0 L	Jungheinrich hydraulic oil	Hydraulic System
B	29 200 680	5.0 L	CLP 100 DIN 51517	Transmission
E	29 201 430	1.0 kg	Grease, DIN 51825	Lubrication
G	29 201 280	400 ml	Chain spray	Chains
H	50 002 004	400 ml	Contact spray	Toothing

➔ * The trucks are factory-equipped with a special hydraulic oil (the Jungheinrich hydraulic oil with a blue colouration). The Jungheinrich hydraulic oil is available only from the Jungheinrich service department. The use of named alternative hydraulic oils is not prohibited, but may lead to a decline in functionality. The Jungheinrich hydraulic oil may be mixed with one of the named alternative hydraulic oils.

Grease guidelines

Code	Saponification	Dew point °C	Worked penetration at 25 °C	NLG1 class	Application temperature °C
E	Lithium	185	265 - 295	2	-35/+120

4 Maintenance and repairs

4.1 Preparing the truck for maintenance and repairs

All necessary safety measures must be taken to avoid accidents when carrying out maintenance and repairs. The following preparations must be made:

Procedure

- Park the truck on a level surface.
- Fully lower the main and auxiliary lift.
- Switch off the truck securely, see page 111.
- Switch off the truck, to do this:
  - Turn the key in the key switch left as far as the stop and remove the key, or
  - CanCode (○) press the O button, or
  - Press the red button on the ISM access module (○).
- Press the Emergency Disconnect switch.
- Disconnect the battery to prevent the truck from being switched on accidentally.
- When working under a raised lift truck, secure it to prevent it from lowering, tipping or sliding away.

⚠ WARNING!

Risk of accidents when working under the load handler, driver's cab and lift truck

▶ When working under a raised load handler, driver's cab or a raised truck, secure them to prevent the truck from from lowering, tipping or sliding away.

▶ When raising the truck, follow the instructions, see page 39. When working on the parking brake, prevent the truck from accidentally rolling away (e.g. with wedges).

4.2 Lifting and jacking up the truck safely

⚠ WARNING!

A truck tipover can cause accidents

In order to raise the truck, use only suitable lifting gear at the points specially provided for this purpose.

▶ Note the weight of the truck on the data plate.

▶ Always use a jack with sufficient capacity.

▶ Raise the unladen truck on a level surface.

▶ When raising the truck, take appropriate measures to prevent it from slipping or tipping over (e.g. wedges, wooden blocks).

Raising and jacking up the truck securely

Requirements

– Prepare the truck for maintenance and repairs (see page 170).

Tools and Material Required

– Jack

– Hard wooden blocks

Procedure

- Place the jack against the contact point.
  Jack contact point, see page 36.
- Raise the truck.
- Support the truck with hard wooden blocks.
- Remove the jack.

The truck is now securely raised and jacked up.

4.3 Removing the seat panel

The drive unit and hydraulic aggregate can be made accessible for service by removing the seat panel.

Removing the seat panel

Procedure

- Pull seat locking lever (112) up and pull the seat towards the steering wheel and take it off.
- Disconnect the fan.
- Undo the screws (172) and remove the seat panel (173).
- Assembly is the reverse order.

The seat panel is now removed.

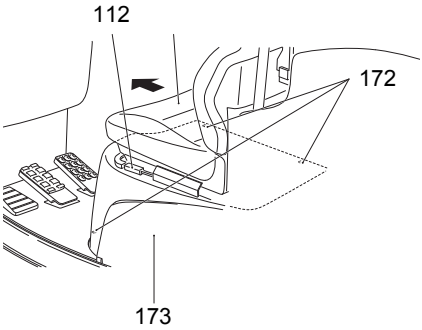

4.4 Removing the floor plate

Removing the floor plate

Procedure

- Loosen and remove the 3 screws (174).
- Open the lock with the Allen key.
- Raise the floor plate carefully.
- Remove the plug connections from the pedal.
- Store the floor plate in a safe place.

Floor plate removed.

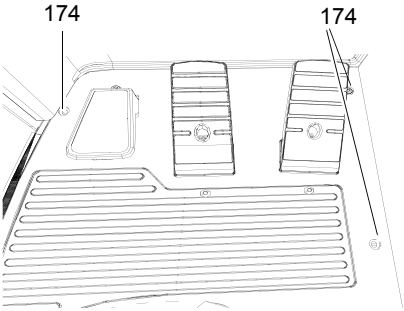

4.5 Checking the hydraulic oil level

⚠ **CAUTION!**

The hydraulic oil is pressurised during operation and is a hazard to health and to the environment.

- ▶ Do not touch pressurised hydraulic lines.
- ▶ Dispose of used oil in accordance with regulations. Store used oil safely until it can be disposed of in accordance with regulations.
- ▶ Do not spill hydraulic oil.
- ▶ Remove any spilled hydraulic immediately with an appropriate bonding agent.
- ▶ The bonding agent / consumable mixture must be disposed of in accordance with regulations.
- ▶ Observe national regulations when handling hydraulic oil.
- ▶ Wear safety gloves when handling hydraulic oil.
- ▶ Prevent hydraulic oil from coming into contact with hot motor parts.
- ▶ Do not smoke when handling hydraulic oil.
- ▶ Avoid contact and digestion. If you swallow oil do not induce vomiting but seek medical assistance immediately.
- ▶ Seek fresh air after breathing in oil fumes or vapours.
- ▶ If oil has come into contact with your skin, rinse your skin with water.
- ▶ If oil has come into contact with your eyes, rinse them with water and seek medical assistance immediately.
- ▶ Replace oil-soaked clothing and shoes immediately.

Check the hydraulic oil level

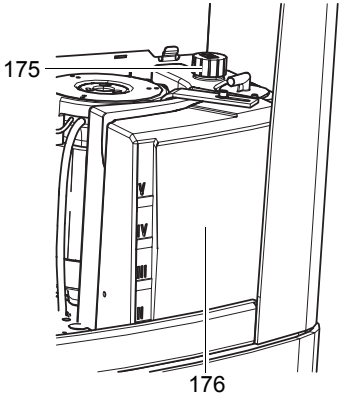

Requirements

– Truck prepared for maintenance and repairs, see page 170.

Procedure

- Push the driver's seat forward.
- Check oil level in hydraulic reservoir (176).

  The hydraulic oil level should only be checked on the dipstick (175) when the load is fully lowered.
- If necessary add hydraulic oil of the correct grade in the filler neck.
- Push the seat back into position and engage the locking lever.

The hydraulic oil level is now checked.

Mast height[1]	**ETV C**
400 - 599	approx. mark III
600 - 799	approx. mark IV

1. DZ mast, max. lift height in cm.

4.6 Checking electrical fuses

Removing the safety cover

Procedure

⚠ CAUTION!

Trapping hazard

▶ Carefully pull off the cover.

- Forcibly pull off the safety cover (177) from the (178) points at the top left and bottom right and place them to one side.
- Assembly is in the reverse order.

Safety cover removed.

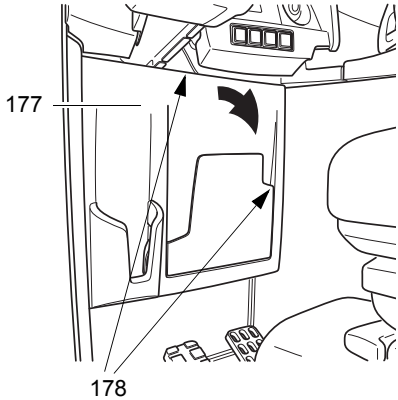

Removing the instrument panel cover

Procedure

- Push the steering wheel towards the seat (outermost position).
- Remove the instrument panel cover (180).
- Remove the side instrument panel (179).

➔ The main fuses are located underneath the side instrument panel (179).

- Assembly is in the reverse order.

Instrument panel cover removed.

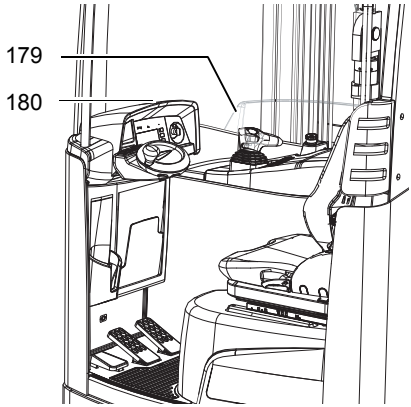

Checking electrical fuses

Requirements

– Safety cover removed.
– Instrument panel cover removed.

Procedure

- Check rating of the fuses in accordance with the table and replace if necessary.

The electrical fuses are now checked.

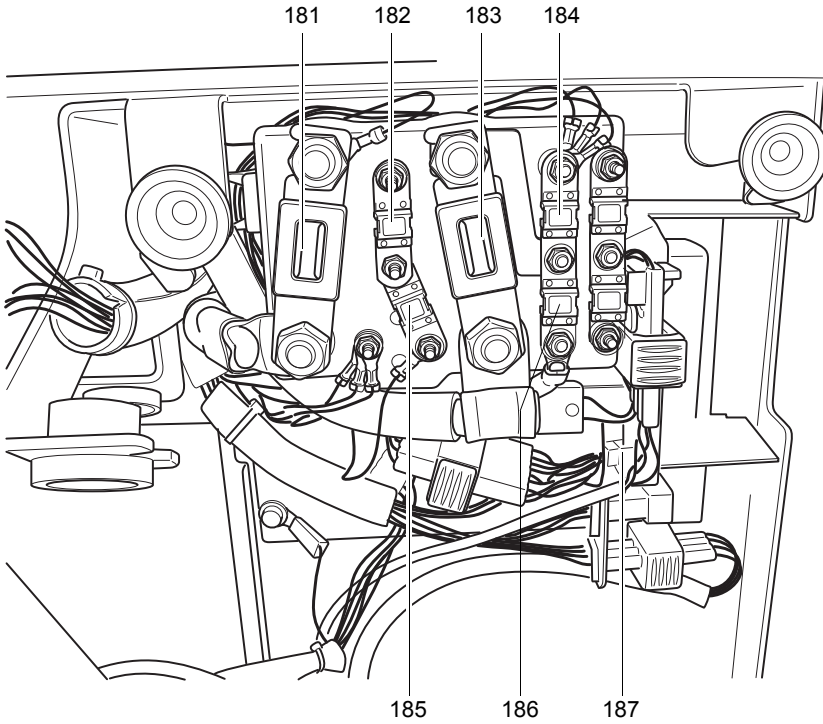

Fuse ratings

Item	Component	Application	Rating [A]
181	F8	Main fuse	425
182	5F6	Cab	30[1]
183	F15	Travel/lift	355
184	F26	48 V behind main contactor	30
185	F1	Overall control circuit fuse	30
186	3F6	Drive wheel steering	30
187	F4	Main contactor	2

1. Depending on cabin version

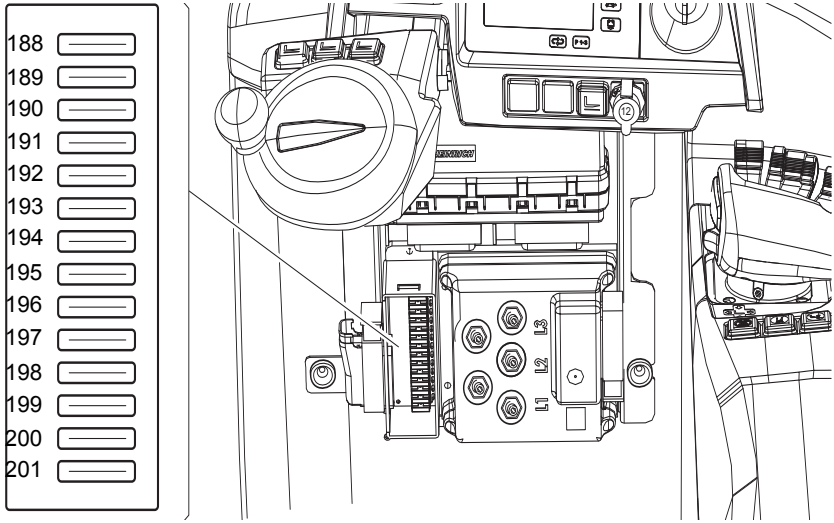

Fuse ratings

Item	Component	Application	Rating [A]
188	F17	Data radio	5
189	4F15	Access control	2
190	F27	Traction / lift controller	2
191	5F2	DC/DC converter	7,5
192	9F2	Seat heating	7,5
193	3F11	Drive wheel steering	2
194	4F8	Display and Control Unit	3
195		Not used	
196		Not used	
197	2F17	MFC hydraulics	2
198	1F13	Travel / brake MFC control fuse	7,5
199	1F14	Travel / brake MFC control fuse	5
200	2F18	MFC hydraulics	10
201	F28	MFC travel/braking	5

4.7 Checking the Wheel Mounting

Tightening Torques

Load wheels	195-10 Nm
Drive wheel	195-10 Nm

Checking the wheel attachment

Requirements

– Truck prepared for maintenance and repairs, see page 170.

Tools and Material Required

– Torque wrench

Procedure

- Tighten the wheel bolts crosswise with a torque wrench.
  For torque see table:

The wheel attachment is now checked.

Replace the wheels if the wear limit (202) has been reached.

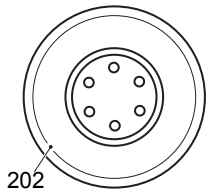

5 Decommissioning the Industrial Truck

If the truck is to be out of service for more than a month, it must be stored in a frost-free and dry room. All necessary measures must be taken before, during and after decommissioning as described hereafter.

When the truck is out of service it must be jacked up so that all the wheels are clear of the ground. This is the only way of ensuring that the wheels and wheel bearings are not damaged.

➔ Jack up the truck, see page 171.

If the truck is to be out of service for more than 6 months, agree further measures with the manufacturer's customer service department.

5.1 Prior to decommissioning

Procedure

- Thoroughly clean the truck, see page 162.
- Prevent the truck from rolling away accidentally.
- Check the hydraulic oil level and replenish if necessary, see page 166.
- Apply a thin layer of oil or grease to any non-painted mechanical components.
- Lubricate the truck according to the lubrication schedule, see page 168.
- Charge the battery, see page 54.
- Disconnect the battery, clean it and grease the terminals.

➔ In addition, follow the battery manufacturer's instructions.

5.2 During decommissioning

NOTE

Full discharge can damage the battery

Self-discharge can cause the battery to fully discharge. Full discharge shortens the useful life of the battery.

▶ Charge the battery at least every 2 months.

➔ Charge the battery, see page 54.

5.3 Restoring the truck to service after decommissioning

Procedure

- Thoroughly clean the truck, see page 162.
- Lubricate the truck according to the lubrication schedule, see page 168.
- Clean the battery, grease the terminal screws and connect the battery.
- Charge the battery, see page 54.
- Start up the truck, see page 76.

6 Safety tests to be performed at intervals and after unusual incidents

The truck must be inspected at least annually (refer to national regulations) or after any unusual event by a qualified inspector. The manufacturer offers a safety inspection service which is performed by personnel specifically trained for this purpose.

A complete test must be carried out on the technical condition of the truck with regard to safety. The truck must also be examined thoroughly for damage.

The operating company is responsible for ensuring that faults are rectified immediately.

7 Final de-commissioning, disposal

➔ Final de-commissioning or disposal of the truck in must be performed in accordance with the regulations of the country of use. In particular, regulations governing the disposal of batteries, consumables and electronic and electrical systems must be observed.

The truck must only be disassembled by trained personnel in accordance with the procedures as specified by the manufacturer.

8 Human vibration measurement

➔ Vibrations that affect the operator over the course of the day are known as human vibrations. Excessive human vibrations will cause the operator long term health problems. The European "2002/44/EC/Vibration" operator directive has therefore been established to protect operators. To help operators to assess the application situation, the manufacturer offers a service of measuring these human vibrations.

G Maintenance and Inspection

⚠ WARNING!

Lack of maintenance can result in accidents

Failure to perform regular servicing can lead to truck failure and poses a potential hazard to personnel and equipment.

▶ Thorough and expert servicing is one of the most important requirements for the safe operation of the industrial truck.

The application conditions of an industrial truck have a considerable impact on component wear. The following service intervals are based on single-shift operation under normal operating conditions. They must be reduced accordingly if the equipment is to be used in conditions of extreme dust, temperature fluctuations or multiple shifts.

NOTE

To prevent damage due to wear, the manufacturer recommends an on-site application analysis to agree on appropriate service intervals.

The following maintenance checklist lists the activities to be performed and the respective intervals to be observed. Maintenance intervals are defined as:

W	=	Every 50 service hours, at least weekly
A	=	Every 500 service hours
B	=	Every 1000 service hours, or at least annually
C	=	Every 2000 service hours, or at least annually
●	=	Standard maintenance interval
✳	=	Cold store maintenance interval (in addition to standard maintenance interval)

➔ "W" maintenance interval operations should be performed by the operating company.

1 Maintenance checklist ETV C 16/20

1.1 Owner

1.1.1 Standard equipment

Brakes		W	A	B	C
1	Test the brakes.	●			

Electrics		W	A	B	C
1	Test warning and safety devices in accordance with operating instructions.	●			
2	Test the emergency disconnect switch.	●			

Power supply		W	A	B	C
1	Check battery and battery components.	●			
2	Check battery cable connections are secure, check for dirt and grease terminals if necessary.	●			
3	Check acid level and add demineralised water if necessary.	●			
4	Check battery cables and battery cable guide for damage.	●			
5	Check battery connector for damage, test it and make sure it is secure.	●			

Driving		W	A	B	C
1	Check wheels for wear and damage.	●			

Chassis and superstructure		W	A	B	C
1	Check doors and/or covers.	●			
2	Check labels are legible, complete and plausible.	●			
3	Check overhead guard and/or cabin are secure and check for damage.	●			

Hydr. movements		W	A	B	C
1	Test "hydraulic" controls and make sure their labels are legible, complete and plausible.	●			
2	Check the lubrication of the load chains and lubricate the load chains if necessary.	●			
3	Test hydraulic system.	●			
4	Check hydraulic oil level and top up if necessary.	●			
5	Check forks or load handler for wear and damage.	●			

1.1.2 Optional equipment

Fork adjuster

Hydr. movements		W	A	B	C
1	Check attachment lubrication; clean and lubricate if necessary.	●			

Telescopic forks

Hydr. movements		W	A	B	C
1	Check attachment lubrication; clean and lubricate if necessary.	●			

Wiper/washer system

Chassis and superstructure		W	A	B	C
1	Check windscreen washer reservoir for leaks and check volume; top up if necessary.	●			

Work lights

Electrics		W	A	B	C
1	Test the lighting.	●			

Electrical heating

Chassis and superstructure		W	A	B	C
1	Test the heating.	●			

Weather proofing

Chassis and superstructure		W	A	B	C
1	Test the doors and check for damage.	●			

Restraint system

Chassis and superstructure		W	A	B	C
1	Test the driver's seat restraint system and check for damage.	●			

Strobe light / beacon

Electrics		W	A	B	C
1	Test the strobe light/beacon and check for damage.	●			

1.2 Customer Service

1.2.1 Standard equipment

Brakes		W	A	B	C
1	Test the brakes.			●	
2	Check the air gap of the magnetic brake.			●	
3	Test the emergency stop brake.			●	
4	Check connections and wiring.			●	
5	Check brake lining.			●	

Electrics		W	A	B	C
1	Check the cables and motor mounting are secure.			●	
2	Test warning and safety devices in accordance with operating instructions.			●	
3	Test the displays and controls.			●	
4	Test the emergency disconnect switch.			●	
5	Check contactors and/or relays.			●	
6	Check fuse ratings.			●	
7	Carry out a chassis insulation-resistance test.			●	
8	Check electrical wiring for damage (insulation damage, connections). Make sure cable connections are secure.			●	

Power supply		W	A	B	C
1	Check acid density, acid level and battery voltage.			●	
2	Check battery and battery components.			●	
3	Check battery cable connections are secure, check for dirt and grease terminals if necessary.			●	
4	Check battery cables and battery cable guide for damage; replace if necessary.			●	
5	Check battery connector for damage, test it and make sure it is secure.			●	

Driving		W	A	B	C
1	Test the deadman switch.			●	
2	Check the attachment of the drive support plate.			●	
3	Check transmission for noise and leakage.			●	
4	Check transmission oil level or grease filling of the transmission and top up if necessary.			●	
5	Replace the transmission oil.				●
6	Check the wheels for wear and damage. Make sure they are secure and check the air pressure if necessary.			●	
7	Check wheel suspension and attachment.			●	

Chassis and superstructure		W	A	B	C
1	Check chassis connections and screw connections for damage.			●	
2	Check doors and/or covers.			●	
3	Check the battery trolley lock setting and test operation			●	
4	Check labels are legible, complete and plausible.			●	
5	Check the condition of the driver's seat.			●	
6	Check the mounting and adjustment of the driver's seat.			●	
7	Check mast mounting/bearings.			●	
8	Check and lubricate rails.			●	
9	Check seat frame is secure and check for damage. Check tightening torques.			●	
10	Check overhead guard and/or cabin are secure and check for damage.			●	
11	Check the supports/tilt safety devices are in place. Check the height- and capacity-related settings.			●	

Hydr. movements		W	A	B	C
1	Test "hydraulic" controls and make sure their labels are legible, complete and plausible.			●	
2	Check cylinders and piston rods for damage and leaks, and make sure they are secure.			●	
3	Test the lift mechanism; check for wear, damage and correct adjustment.			●	
4	Check the fastening clamps on the mast lift cylinder for wear and damage.			●	
5	Test the hose guide and check for damage.			●	
6	Check settings and wear levels of slide pieces and stops and adjust or replace the slide pieces as required.			●	
7	Check load chain setting and tension if necessary.			●	
8	Check the lubrication of the load chains and lubricate the load chains if necessary.			●	
9	Check the load chain fasteners and check the chain bolts for wear and damage.			●	
10	Check lateral clearance of the mast connections and the fork carriage.			●	
11	Visually inspect the mast rollers and check the running surfaces for wear.			●	
12	Replace hydraulic oil filter and breather filter.				●
13	Test hydraulic system.			●	
14	Check that hydraulic ports, hose and pipe lines are secure, check for leaks and damage.			●	
15	Test emergency lowering system.			●	
16	Check hydraulic oil level and top up if necessary.			●	
17	Replace the hydraulic oil.				●

Hydr. movements		W	A	B	C
18	Test the pressure relief valve and adjust if necessary.			●	
19	Check sliding blocks are complete.			●	
20	Check forks or load handler for wear and damage.			●	
21	Test the sideshifter, check settings and check for damage.			●	
22	Check piston rod screw depth and counter fixing / clamp. Where two tilt cylinders with the same stroke length are used, check their setting in respect of each other.			●	
23	Check tilt cylinders and mounting.			●	
24	Check mast holder guide rollers for wear and damage.				●

Agreed performance		W	A	B	C
1	Carry out a test run with the rated load and, if necessary, with a customer-specific load.			●	
2	Demonstration after maintenance.			●	
3	Lubricate the truck according to the lubrication schedule.			●	

Steering		W	A	B	C
1	Check the steering bearings, steering play and steering toothing or steering chain. Lubricate the steering toothing or steering chain.			●	

1.2.2 Optional equipment

Electrolyte circulation

Power supply		W	A	B	C
1	Check hose connections and test the pump.			●	

Aquamatik

Power supply		W	A	B	C
1	Test Aquamatik plug, hose connections and float and check for leaks.			●	
2	Test flow indicator and check for leaks.			●	

Load backrest

Hydr. movements		W	A	B	C
1	Check the attachment is properly secured to the truck and check the load-bearing components.			●	

Battery refill system

Power supply		W	A	B	C
1	Test battery refill system and check for leaks.			●	

Boom

Hydr. movements		W	A	B	C
1	Check the attachment is properly secured to the truck and check the load-bearing components.			●	

Fork adjuster

Hydr. movements		W	A	B	C
1	Check attachment bearings, guides and stops for wear and damage; grease and clean these components.			●	
2	Check attachment lubrication; clean and lubricate if necessary.			●	
3	Check axial play of the front and rear rollers and adjust if necessary.			●	
4	Check sliding blocks are complete.			●	
5	Check the attachment is properly secured to the truck and check the load-bearing components.			●	
6	Test operation and setting of the attachment. Check attachment for damage.			●	
7	Check hydraulic ports and tighten if necessary.			●	
8	Test the fork positioner and check for damage.			●	
9	Check cylinder piston rods and bushings.			●	
10	Check cylinder seals.			●	

Telescopic forks

Hydr. movements		W	A	B	C
1	Check attachment bearings, guides and stops for wear and damage; grease and clean these components.			●	
2	Check attachment lubrication; clean and lubricate if necessary.			●	
3	Check the attachment is properly secured to the truck and check the load-bearing components.			●	
4	Test operation and setting of the attachment. Check attachment for damage.			●	
5	Check hydraulic ports and tighten if necessary.			●	
6	Check cylinder seals.			●	
7	Check piston and piston rods for damage, check setting and adjust if necessary.			●	
8	Check that the hydraulic connections, hoses and piping are secure, and check for leaks and damage.			●	

Crane hook

Hydr. movements		W	A	B	C
1	Check the attachment is properly secured to the truck and check the load-bearing components.			●	

Wiper/washer system

Chassis and superstructure		W	A	B	C
1	Check windscreen washer reservoir for leaks and check volume; top up if necessary.			●	
2	Test the windscreen wipers and check for damage, replace if necessary.			●	

Lift cutout

Hydr. movements		W	A	B	C
1	Test the lift-limit cut-off/lift cut-off, check for damage and make sure it is secure.			●	

Seat heating

Electrics		W	A	B	C
1	Check electrical wiring for damage (insulation damage, connections). Make sure cable connections are secure.			●	

Shock sensor / data recorder

Electrics		W	A	B	C
1	Check shock sensor / data recorder are secure and check for damage.			●	

Data radio

System components		W	A	B	C
1	Test scanner and terminal, check for damage and make sure they are secure and clean.			●	
2	Check fuse ratings.			●	
3	Check wiring is secure and check for damage.			●	

Video system

System components		W	A	B	C
1	Check wiring is secure and check for damage.			●	
2	Test camera, make sure it is secured and clean.			●	
3	Test the monitor, make sure it is secured and clean.			●	

Work lights

Electrics		W	A	B	C
1	Test the lighting.			●	

Fire extinguisher

Agreed performance		W	A	B	C
1	Check fire extinguisher is present, secure and check test interval.				●

Weigher sensors / switches

Electrics		W	A	B	C
1	Test weigher system and check for damage.			●	

Access module

Electrics		W	A	B	C
1	Test the access module, check for damage and make sure it is secure.			●	

Electrical heating

Chassis and superstructure		W	A	B	C
1	Test the heating.			●	

Weather proofing

Electrics		W	A	B	C
1	Check fuse ratings.			●	

Chassis and superstructure		W	A	B	C
1	Test the window heating and check for damage.			●	
2	Test the doors and check for damage.			●	

Electrical optional equipment

Electrics		W	A	B	C
1	Test the electrical optional equipment and check for damage.			●	

Restraint system

Chassis and superstructure		W	A	B	C
1	Test the driver's seat restraint system and check for damage.			●	

Hose guide

Hydr. movements		W	A	B	C
1	Test the hose reel and check for leaks and damage.			●	

Sideshifter centring

Hydr. movements		W	A	B	C
1	Test sideshifter centring operation.			●	

Strobe light / beacon

Electrics		W	A	B	C
1	Test the strobe light/beacon and check for damage.			●	

Mast lift retract damping

Hydr. movements		W	A	B	C
1	Test gas pressure dampers on the battery panel and check for damage.			●	

Overhead guard cover

Chassis and superstructure		W	A	B	C
1	Check overhead guard cover is present, check for damage and make sure it is secure.			●	

Audible warning devices

Electrics		W	A	B	C
1	Test the buzzer/warning alarm, check for damage and make sure it is secure.			●	

Lift height indicator

System components		W	A	B	C
1	Test the lift-height display and check its components.			●	

Belt lock control

Chassis and superstructure		W	A	B	C
1	Test the belt lock control and check for damage.			●	

Automatic crawl speed

Driving		W	A	B	C
1	Check that sensors / switches are secured, not damaged, clean and operational.			●	

Discharge strap

Electrics		W	A	B	C
1	Check anti-static discharge strap/chain is present and not damaged.			●	

Cold-store application

Hydr. movements		W	A	B	C
1	Note: In cold-store applications, we recommend replacing the hydraulic oil every 1000 service hours or once a year.				

Issued on: 13.04.2017 11:54:20

Foreword

Notes to the operating instructions

The present ORIGINAL OPERATING INSTRUCTIONS are designed to provide sufficient instruction for the safe operation of the traction battery. The information is presented in a precise and clear manner. The chapters are arranged by letter and the pages are numbered continuously.

The operating instructions detail different battery variants and their optional equipment. When operating and servicing the battery, make sure that the particular section applies to your battery model.

Our traction batteries and their optional equipment are subject to ongoing development. We reserve the right to alter the design, features and technical aspects of the equipment. No guarantee of particular features of the traction battery should therefore be assumed from the present operating instructions.

Safety notices and text mark-ups

Safety instructions and important explanations are indicated by the following graphics:

⚠ DANGER!

Indicates an extremely hazardous situation. Failure to comply with this instruction will result in severe irreparable injury and even death.

⚠ WARNING!

Indicates an extremely hazardous situation. Failure to comply with this instruction may result in severe irreparable injury and even death.

⚠ CAUTION!

Indicates a hazardous situation. Failure to comply with this instruction may result in slight to medium injury.

NOTE

Indicates a material hazard. Failure to comply with this instruction may result in material damage.

➔ Used before notices and explanations.

- ● Indicates standard equipment
- ○ Indicates optional equipment

Jungheinrich Aktiengesellschaft

Friedrich-Ebert-Damm 129
22047 Hamburg - Germany

Tel: +49 (0) 40/6948-0

www.jungheinrich.com

02.16 EN

Contents

A Traction battery

1 Correct Use and Application

This appendix does not apply to trucks with lithium-ion batteries. Further documentation for lithium-ion batteries can be obtained from the supplied documents.

Failure to observe the operating instructions, carrying out repairs with non-original spare parts, tampering with the battery or using electrolyte additives will invalidate the warranty.

Observe the instructions for maintaining the safety rating during operation for batteries in accordance with Ex I and Ex II (see relevant certification).

2 Data plate

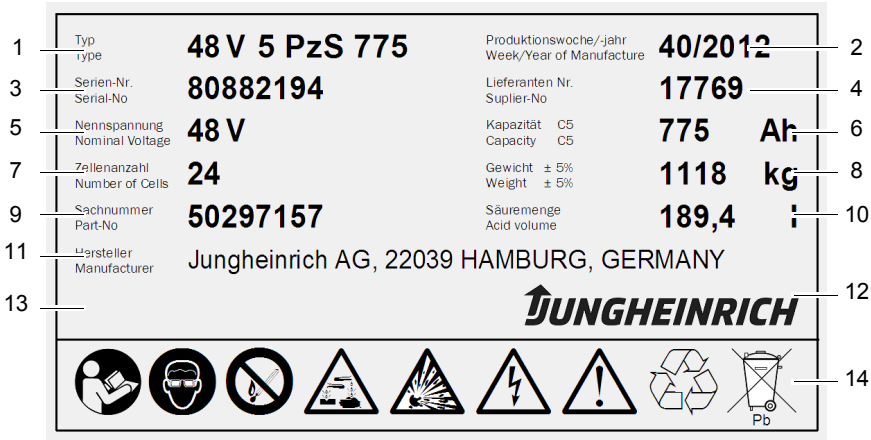

1	Model (battery name)
2	Production week / production year
3	Serial number
4	Supplier number
5	Rated voltage
6	Capacity
7	Number of cells
8	Weight
9	Part no.
10	Acid quantity
11	Manufacturer
12	Manufacturer's logo
13	CE mark (for batteries above 75 V only)

14	Safety instructions and warning information

3 Safety Instructions, Warning Indications and other Notes

	Used batteries must be treated as hazardous waste. These batteries are marked with the recycling symbol and the sign showing a crossed-out rubbish bin, and should not be disposed of with ordinary household waste. Buy-back terms and type of recycling are to be agreed with the manufacturer as described in § 8 of the battery legislation.
	Do not smoke! No naked flames, glowing embers or sparks near the battery - fire and explosion hazard!
	Avoid fire and explosion hazards and short circuits due to overheating! Keep away from naked flames and strong heat sources.
	Always wear protective clothing (e.g. safety goggles and safety gloves) when working on cells and batteries. Always wash your hands after completing the work. Use only insulated tools. Do not mechanically machine the battery, strike, crush, compress, notch, dent or modify it in any way.
	Hazardous electric voltage! The metal parts of the battery cells are permanently live. Therefore do not place any foreign objects or tools on the battery. Observe national health and safety regulations.
	If the materials leak, do not inhale the fumes. Wear safety gloves.
	Follow the user instructions and keep them in a visible position in the charging area. Work on the batteries should be performed only as instructed by specialist personnel.

4 Lead acid batteries with armour plated cells and liquid electrolyte

4.1 Description

Jungheinrich traction batteries are lead acid batteries with armour plated cells and liquid electrolyte. The names of the traction batteries are PzS, PzB, PzS Lib and PzM.

Name	Explanation
PzS	– Lead acid battery with "Standard" armour plated cells and liquid electrolyte – Battery cell width: 198 mm
PzB	– Lead acid battery with "British Standard" armour plated cells and liquid electrolyte – Battery cell width: 158 mm
PzS Lib	– Lead acid battery with "Standard" armour plated cells and liquid electrolyte – Lead acid battery with extended maintenance interval – Battery cell width: 198 mm
PzM	

Electrolyte

The rated density of the electrolyte assumes a temperature of 30°C and the rated electrolyte level is fully charged. Higher temperatures will reduce, lower temperatures will increase the electrolyte density.
The corresponding adjustment factor is ± 0.0007 kg/l per K, e. g. electrolyte density 1.28 kg/l at 45 °C corresponds to a density of 1,29 kg/l at 30 °C.

The electrolyte must comply with the purity regulations of DIN 43530 Part 2.

4.1.1 Battery nominal data

1.	Product	Traction battery
2.	Nominal voltage	2.0 V x number of cells
3.	Rated capacity C5	See data plate
4.	Discharge current	C5/5h
5.	Nominal electrolyte density[1]	1.29 kg/l
6.	Nominal temperature[2]	30 °C
7.	System rated electrolyte level	up to "Max" electrolyte level marking
	Limit temperature[3]	55 °C

1. Reached within the first 10 cycles.
2. Higher temperatures shorten the useful life, lower temperatures reduce the available capacity.
3. Not permissible as operating temperature.

4.2 Operation

4.2.1 Commissioning unfilled batteries

The operations required must be carried out by the manufacturer's customer service department or a customer service organisation authorised by the manufacturer.

4.2.2 Commissioning filled and charged batteries

Battery cell cross section

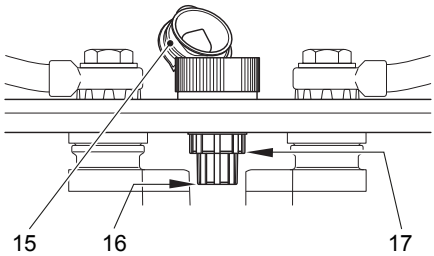

Top view of a battery cell

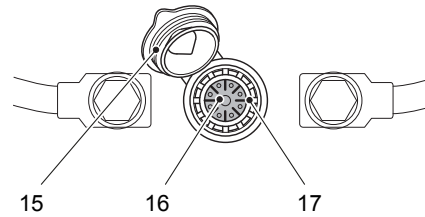

Checks and operations to be performed before starting daily work

Procedure

- Make sure the battery is in physically good condition.
- Make sure the terminals are correct (positive to positive and negative to negative) and check that contacts on the battery terminal conducting system are secure.
- Check the M10 terminal screws of the conductors and connectors are secure and if necessary torque to 23 ±1 Nm.
- Charge the battery, see page 13.
- Check the electrolyte level of each battery cell after charging and top up if necessary:
  - Open the plug (15).
    The electrolyte level should not be less than the "Min" electrolyte marking (16) and must not exceed the "Max" (17) marking.
  - If necessary, add electrolyte with pure water up to the "Max" electrolyte level marking (17), see page 15.
  - Close the plug (15).

The test is now complete.

4.2.3 Discharging the battery

➔ To achieve an optimum useful life avoid operational discharge of more than 80% of nominal capacity (full discharge). This corresponds to a minimum electrolyte density of 1.13 kg/l at the end of the discharge.
Fully or partially discharged batteries must be re-charged immediately and not left unattended.

4.2.4 Charging the battery

⚠ WARNING!

The gases produced during charging can cause explosions

The battery gives off a mixture of oxygen and hydrogen (electrolytic gas) during charging. Gassing is a chemical process. This gas mixture is highly explosive and must not be ignited.

- ▶ Always disconnect the charger and truck before connecting or disconnecting the charger and battery.
- ▶ The charger must be adapted to the battery in terms of voltage, charge capacity and battery technology.
- ▶ Before charging, check all cables and plug connections for visible signs of damage.
- ▶ Ventilate the room in which the truck is being charged.
- ▶ Battery cell surfaces must remain exposed during charging in order to ensure sufficient ventilation, see truck operating instructions, chapter D, Charging the Battery.
- ▶ Do not smoke and avoid naked flames when handling batteries.
- ▶ Wherever an industrial truck is parked for charging there must be no inflammable material or consumables capable of creating sparks within a minimum distance of 2000 mm from the truck.
- ▶ Fire protection equipment must be available.
- ▶ Do not place any metallic objects on the battery.
- ▶ Always follow the safety regulations of the battery and charger station manufacturers.

NOTE

The battery must only be charged with DC current. All charging procedures in accordance with DIN 41773 and DIN 41774 are permissible.

➔ The electrolyte temperature rises by approx. 10°C during charging. Charging should therefore only begin when the electrolyte temperature is below 45°C. The electrolyte temperature of batteries must be at least +10°C before charging. Otherwise the battery will not charge correctly. Below 10°C the battery is insufficiently charged with standard charging systems.

Charging the battery

Requirements

– Permissible electrolyte temperature 10°C to 45°C).

Procedure

- Open or take off the tray lid or covers from the battery compartment.

➔ Deviations are outlined in the truck's operating instructions. The plugs remain on the cells or remain closed.

- Connect the battery to the switched off charger, ensuring the terminals are connect (positive to positive and negative to negative).
- Switch on the charger.

The battery is charged.

➔ *Charging is considered to be complete when the electrolyte density and battery voltage remain constant for more than 2 hours.*

Compensation charging

Compensation charging is used to ensure the useful life and maintain capacity after full discharge and repeated insufficient charging. The maximum compensation charge current is 5 A/100 Ah rated capacity.

➔ Compensation charging should be carried out weekly.

Trickle charging

Battery trickle charging is partial charging that extends the daily application time. Higher average temperatures occur during trickle charging which reduce the useful life of the batteries.

➔ Trickle charges should only be performed when the charge level is below 60 %. Use replacement batteries instead of regular trickle charging.

4.3 Servicing lead-acid batteries with armour plated cells

4.3.1 Quality of Water for Adding Electrolyte

➔ The quality of the water used to add electrolyte must correspond to purified or distilled water. Purified water can be produced through distillation or ion exchangers and is then suitable for the production of electrolyte.

4.3.2 Daily

Battery cell cross section

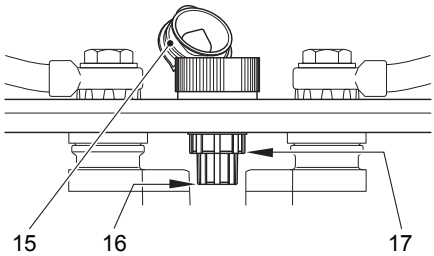

Top view of a battery cell

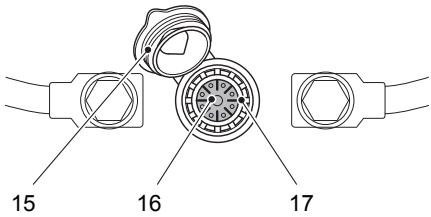

– Charge the battery after each discharge.
– After charging, check the electrolyte level of each battery cell and replenish as required:
  – Open the plug (15).
  – If necessary, add electrolyte with pure water up to the "Max" electrolyte level marking (17).
  – Close the plug (15).

➔ The electrolyte level should not be less than the "Min" electrolyte marking (16) and must not exceed the "Max" (17) marking.

4.3.3 Weekly

- After re-charging, carry out a visual inspection for dirt and physical damage.
- If the battery is charged regularly according to the IU characteristic, carry out a compensation charge.

4.3.4 Monthly

- Towards the end of the charging process measure and record the voltages of all the cells with the charger switched on.
- After charging measure and record the electrolyte density and the electrolyte temperature in all the cells.
- Compare the results with the previous ones.

➔ If you find significant differences compared with the previous measurements or differences between the cells, contact the manufacturer's customer service department.

4.3.5 Annually

- Measure the insulation resistance of the truck in accordance with EN 1175-1.
- Measure the insulation resistance of the battery in accordance with DIN EN 1987-1.

➔ In accordance with DIN EN 50272-3 the battery insulation resistance should not be less than 50 Ω per volt of rated voltage.

5 PzV and PzV-BS lead-acid batteries with sealed armour plated cells

5.1 Description

PzV batteries are sealed batteries with fixed electrolytes, to which no water can be added over the entire lifespan of the battery. Relief valves are used as plugs which are destroyed when opened. During operation the same safety requirements apply to the sealed batteries as for batteries with liquid electrolyte. This is to avoid electric shock, explosion of the electrolyte charging gases or hazardous electrolyte burns if the cell vessels are destroyed.

➔ PzV batteries are low gassing, but not gassing-free.

Electrolyte

The electrolyte is sulphuric acid which is fixed in gel. The density of the electrolyte cannot be measured.

Name	Explanation
PzV	– Lead acid battery with "Standard" closed armour plated cells and electrolyte in gel compound – Battery cell width: 198 mm
PzV-BS	– Lead acid battery with "British Standard" closed armour plated cells and electrolyte in gel compound – Battery cell width: 158 mm

5.1.1 Battery nominal data

1.	Product	Traction battery
2.	Nominal voltage	2.0 V x number of cells
3.	Rated capacity C5	See data plate
4.	Discharge current	C5/5h
5.	Rated temperature	30°C
	Limit temperature[1]	45°C, not permissible as operating temperature
6.	Rated density of the electrolyte	Cannot be measured
7.	System rated electrolyte level	Cannot be measured

1. Higher temperatures shorten the useful life, lower temperatures reduce the available capacity.

5.2 Operation

5.2.1 Commissioning

Checks and operations to be performed before starting daily work

Procedure

- Make sure the battery is in physically good condition.
- Make sure the terminals are correct (positive to positive and negative to negative) and check that contacts on the battery terminal conducting system are secure.
- Check the M10 terminal screws of the conductors and connectors are secure and if necessary torque to 23 ±1 Nm.
- Charge the battery, see page 18.

The test is now complete.

5.2.2 Discharging the battery

➔ To achieve an optimum useful life avoid operational discharges of more than 60% of nominal capacity.

➔ If the battery is discharged during operation by more than 80% of rated capacity the useful life of the battery will reduce significantly. Fully or partially discharged batteries must be re-charged immediately and not left unattended.

5.2.3 Charging the battery

⚠ WARNING!

The gases produced during charging can cause explosions

The battery gives off a mixture of oxygen and hydrogen (electrolytic gas) during charging. Gassing is a chemical process. This gas mixture is highly explosive and must not be ignited.

▶ Always disconnect the charger and truck before connecting or disconnecting the charger and battery.

▶ The charger must be adapted to the battery in terms of voltage, charge capacity and battery technology.

▶ Before charging, check all cables and plug connections for visible signs of damage.

▶ Ventilate the room in which the truck is being charged.

▶ Battery cell surfaces must remain exposed during charging in order to ensure sufficient ventilation, see truck operating instructions, chapter D, Charging the Battery.

▶ Do not smoke and avoid naked flames when handling batteries.

▶ Wherever an industrial truck is parked for charging there must be no inflammable material or consumables capable of creating sparks within a minimum distance of 2000 mm from the truck.

▶ Fire protection equipment must be available.

▶ Do not place any metallic objects on the battery.

▶ Always follow the safety regulations of the battery and charger station manufacturers.

NOTE

Charging the battery incorrectly can result in material damage.

Incorrect battery charging can result in overloading of the electric wires and contacts, hazardous gas formation and electrolyte leakage from the battery cell.

- ▶ Always charge the battery with DC current.
- ▶ All DIN 41773 charging procedures are permitted in the format approved by the manufacturer.
- ▶ Always connect the battery to a charger that is appropriate to the size and type of the battery.
- ▶ If necessary have the charger checked by the manufacturer's customer service department for suitability.
- ▶ Do not exceed the limit curents in accordance with DIN EN 50272-3 in the gassing area.

Charging the battery

Requirements

– Electrolyte temperature between +15°C and +35°C

Procedure

- Open or take off the tray lid or covers from the battery compartment.
- Connect the battery to the switched off charger, ensuring the terminals are connect (positive to positive and negative to negative).
- Switch on the charger.

➔ The electrolyte temperature rises by approx. 10°C during charging. If the temperatures are permanently higher than 40°C or lower than 15°C, a temperature-dependent constant voltage control of the charger is required. The adjustment factor must be applied with -0.004 V/C per °C.

The battery is charged.

➔ *Charging is considered to be complete when the electrolyte density and battery voltage remain constant for more than 2 hours.*

Compensation charging

Compensation charging is used to ensure the useful life and maintain capacity after full discharge and repeated insufficient charging.

➔ Compensation charging should be carried out weekly.

Trickle charging

Battery trickle charging is partial charging that extends the daily application time. Higher average temperatures occur during trickle charging which can reduce the useful life of the batteries.

➔ Trickle charges should only be performed when the charge level is below 50%. Use replacement batteries instead of regular trickle charging.

➔ Avoid trickle charging with PzV batteries.

5.3 Servicing PzV and PzV-BS lead-acid batteries with sealed armour plated cells

➔ Do not add water!

5.3.1 Daily

– Charge the battery after each discharge.

5.3.2 Weekly

– Visually inspect for dirt and physical damage.

5.3.3 Every three months

– Measure and record the overall voltage.
– Measure and record the individual voltages.
– Compare the results with the previous ones.

➔ Carry out the measurements after full charging and subsequent resting for at least 5 hours.

➔ If you find significant differences compared with the previous measurements or differences between the cells, contact the manufacturer's customer service department.

5.3.4 Annually

– Measure the insulation resistance of the truck in accordance with EN 1175-1.
– Measure the insulation resistance of the battery in accordance with DIN EN 1987-1.

➔ In accordance with DIN EN 50272-3 the battery insulation resistance should not be less than 50 Ω per volt of rated voltage.

6 Aquamatik water replenishment system

6.1 Water replenishment system design

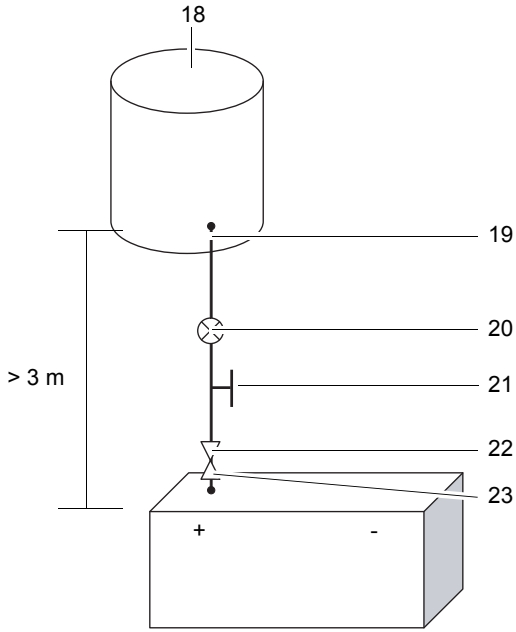

18	Water container
19	Tap connection with ball cock
20	Flow indicator
21	Shut-off cock
22	Locking coupling
23	Battery lock connector

6.2 Functional Description

The Aquamatik water replenishment system is used to adjust the rated electrolyte level automatically on traction batteries for industrial trucks.

The battery cells are interconnected through hoses and are attached to the water supply (e.g. water container) through a plug connection. When the shut-off cock is opened all the cells are filled with water. The Aquamatik plug controls the amount of water required and, at the relevant water pressures, ensures the water supply is shut off and the valve is closed securely.

The plug systems have an optical level indicator, a diagnostic port to measure the temperature and electrolyte density and a degassing port.

6.3 Adding water

Water should be added to the batteries just before the battery is fully charged. This ensures that the amount of water added is mixed with the electrolyte.

6.4 Water pressure

The water replenishment system must be operated with a water pressure in the water line of 0.3 bar - 1.8 bar. Any deviations from the permissible pressure ranges will affect the operation of the systems.

Water drop

Assembly height above battery surface is between 3 - 18 m.
1 m corresponds to 0.1 bar.

Pressure water

The pressure regulating valve is adjusted to suit the system and must lie between 0.3 - 1.8 bar.

6.5 Filling time

The filling time for a battery depends on the electrolyte level, the ambient temperature and the filling pressure. Filling ends automatically. The water supply line must be disconnected from the battery when the water has been filled.

6.6 Water quality

➔ The quality of the water used to fill up electrolyte must correspond to purified or distilled water. Purified water can be produced through distillation or ion exchangers and is then suitable for the production of electrolyte.

6.7 Battery tubing

The tubing of the individual plugs is in accordance with the existing electric circuit. No changes should be made.

6.8 Operating temperature

Batteries with automatic water replenishment systems should only be stored in rooms with temperatures > 0°C, as otherwise the systems could freeze.

6.9 Cleaning measures

The plug systems must only be cleaned with purified water in accordance with DIN 43530-4. No parts of the plugs must come into contact with solvent-based materials or soap.

6.10 Service mobile vehicle

Mobile water filling vehicle with pump and filling gun to fill individual cells. The immersion pump in the container generates the necessary filling pressure. The service mobile must be at exactly the same height as the battery base.

7 Electrolyte circulation

7.1 Functional Description

Electrolyte circulation ensures the supply of air during charging to mix the electrolyte, thereby preventing any acid layer, shortening the charge time (charge factor approx. 1.07) and reducing the formation of gas during charging. The charger must be suitable for the battery and electrolyte circulation.

A pump in the charger produces the necessary compressed air which is introduced to the battery cells via a hose system. The electrolyte is circulated via the inlet air and the electrolyte density level is constant over the entire length of the electrode.

Pump

In the event of a fault, e.g. if the pressure control system responds for an unknown reason, the filters must be checked and replaced if necessary.

Battery connection

A hose is attached to the pump module which together with the charge leads is routed from the charger to the charging connector. The air is passed on to the battery via the electrolyte circulation coupling ducts in the connector. When routing make sure the hose is not bent.

Pressure-monitoring module

The electrolyte circulation pump is activated when charging begins. The pressure monitoring module monitors the build-up of pressure during charging. This ensures that the required air pressure is provided for electrolyte circulation charging.

In the event of malfunctions, a visual error message appears on the battery charger. Some examples of malfunctions are listed below:

– No connection between the air coupling of the battery and the recirculation module (for separate coupling) or faulty air coupling
– Leaking or faulty hose connections on battery
– Contaminated intake filter

NOTE

If an installed electrolyte circulation system is seldom used or not used at all, or if the battery is subjected to severe temperature fluctuations, the electrolyte may flow back into the hose system.

▶ Attach a separate coupling system to the air inlet line, such as: locking coupling to the battery side and through-coupling to the air supply side.

Schematic illustration

Electrolyte circulation on the battery and air supply via the charger.

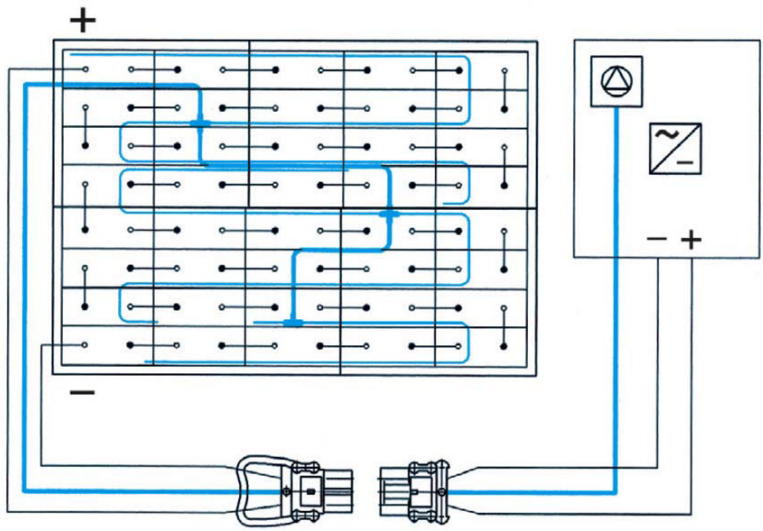

8 Cleaning batteries

Batteries and trays must be cleaned in order to

– Maintain cell insulation and protect cells from ground or external conductive parts.
– Avoid damage from corrosion and stray currents.
– Avoid excessive and varying automatic discharge of the individual cells or block batteries due to stray currents.
– Avoid electric sparking due to stray currents.

When cleaning the batteries make sure that:

– The assembly site chosen for cleaning is close to a drainage system for processing the electrolytic rinsing water.
– All health and safety as well as water and waste disposal regulations are observed when disposing of used electrolyte or rinsing water.
– Protective goggles and clothing are worn.
– Cell plugs are not removed or opened.
– Clean the plastic components of the battery, in particular the cell containers, only with water or water-based cloths without any additives.
– After cleaning, the top of the battery is dried with suitable equipment, e.g. compressed air or cloths.
– Any fluid that has entered the battery tray must be suctioned off and disposed of in accordance with the above-mentioned regulations.

Cleaning the battery with a high pressure cleaner

Requirements

– Cell connectors tight, plugged in securely
– Cell plugs closed

Procedure

- Follow the high pressure cleaner's user instructions.
- Do not use any cleaning additives.
- Observe the permissible cleaning device temperature setting of 140°C.

➔ This generally ensures that the temperature does not exceed 60°C at a distance of 30cm behind the outlet nozzle.

- Observe the maximum operating pressure of 50 bar.
- Observe a minimum distance of 30 cm from the top of the battery.
- The battery should be sprayed over its entire surface to avoid localised overheating.

➔ Do not clean one spot for more than 3 seconds with the jet to avoid exceeding the maximum battery surface temperature of 60°C.

- After cleaning dry the battery surface with suitable materials e.g. compressed air or cleaning cloths.

Battery cleaned.

9 Storing the battery

NOTE

The battery should not be stored for longer than 3 months without charging as otherwise it will no longer be functional.

If the battery is to be taken out of service for a long period, it should be stored fully charged in a dry room protected from frost. To ensure the availability of the battery the following charges can be selected:

– Monthly compensation charge for PzS and PzB batteries or 4-monthly full charge for PzV batteries.
– Trickle charge for a charging voltage of 2.23 V x number of cells for PzS, PzM and PzB batteries or 2.25 V x number of cells for PzV batteries.

If the battery is to be taken out of service for a long period (> 3 months), it should, as far as possible, be charged to 50% of its charge level and stored in a dry room protected from frost.

10 Troubleshooting

If any faults are found on the battery or charger, contact the manufacturer's customer service department immediately.

➔ The operations required must be carried out by the manufacturer's customer service department or a customer service organisation authorised by the manufacturer.

11 Disposal

Batteries marked with the recycling symbol and the sign showing a crossed-out rubbish bin should not be disposed of with ordinary household waste.

Buy-back terms and type of recycling are to be agreed with the manufacturer as described in § 8 of the battery legislation.