2012 Fork Service Manual

INTRODUCTION

This manual is intended to guide the user through basic service of Manitou front forks. Service is supported by the identification of common parts and assemblies that have been assembled into Service Kits. The purpose of this manual will be to describe conditions that may drive the need for service and to provide installation instructions for the kits.

Due to the time-consuming nature of suspension fork service, at this time our primary focus is to offer service kits that minimize the amount of downtime and labor involved.

Important information is highlighted in this manual by the following notations:

WARNING
Failure to follow WARNING instructions could result in severe injury or death to the person inspecting or repairing the suspension fork or the user.

CAUTION
A CAUTION a caution indicates special precautions that must be taken to avoid damage to the product.

NOTE
A NOTE provides key information to make procedures easier or clearer

GENERAL WARNING: Suspension forks by design can contain preloaded springs, gases and fluids under extreme pressure and warnings contained in this manual must be observed to reduce the possibility of injury or possible death. Following these instructions can help you reduce the risk of being injured. Any questions in regards to the information in this manual should be directed to Manitou Customer Service at (888) 686-3472.

WARNING: Suspension forks uses preloaded spring(s) to provide compression spring resistance. This system must be relieved of preload prior to servicing. Failure to relieve air pressure could result in injury or possible death.

CAUTION: Suspension forks use precision machined aluminum and other soft alloy components. Using correct tools for assembly is essential to prevent damage.

This manual is divided up into different sections, each one pertaining to a different part of the servicing of your fork. Below is a list of our fork models and which sections you will use to service your particular fork.

Circus Comp/Match/Tower Comp Forks
1. Section 1 – Casting Removal
2. Section 3 – Dust Seal Replacement
3. Section 4 – Coil Spring Service
4. Section 8 – Absolute+ Service
5. Section 10 – Casting Installation

Circus Expert/Minute Expert/Tower Expert Forks
1. Section 1 – Casting Removal
2. Section 3 – Dust Seal Replacement
3. Section 7 – ACT Air Service
4. Section 8 – Absolute+ Service
5. Section 10 – Casting Installation

R7 MRD Forks
1. Section 2 – MRD Casting Removal
2. Section 3 – Dust Seal Replacement
3. Section 6 – TS Air Service
4. Section 9 – Absolute+ MRD Service
5. Section 11 – MRD Casting Installation

Marvel Pro Forks
1. Section 2 – MRD Casting Removal
2. Section 3 – Dust Seal Replacement
3. Section 8 – ISO Air Service
4. Section 9 – Absolute+ MRD Service
5. Section 11 – MRD Casting Installation

Minute Pro/Tower Pro Forks
1. Section 1 – Casting Removal
2. Section 3 – Dust Seal Replacement
3. Section 5 – MARS Air Spring Service
4. Section 8 - Absolute+ Service
5. Section 10 – Casting Installation

R7 Forks
1. Section 1 – Casting Removal
2. Section 3 – Dust Seal Replacement
3. Section 6 – TS Air Service
4. Section 8 – Absolute+ Service
5. Section 10 - Casting Installation

Marvel Expert Forks
1. Section 1 – Casting Removal
2. Section 3 – Dust Seal Replacement
3. Section 8 – ISO Air Service
4. Section 8 – Absolute+ Service
5. Section 10 – Casting Installation

Table of Contents

Section	Page Number
Section 1 - Casting Removal	4
Section 2 - MRD Casting Removal	5
Section 3 - Dust Seal Replacement	6
Section 4 - Coil Spring Service	7 - 8
Section 5 - MARS Air Spring Service	9 - 10
Section 6 - TS Air Spring Service	11 - 12
Section 7 - ACT Air Spring Service	13 - 14
Section 8 - ISO Air Spring Service	15 - 16
Section 9 - Absolute+ Service	17 - 18
Section 10 - Absolute+ MRD Service	19 - 20
Section 11 - Casting Installation	21
Section 12 - MRD Casting Installation	22
Oil Height Chart	23
Fork Exploded Diagrams	24 - 34

Contact Information

Hayes Bicycle Group
6750 W Florist Ave
Milwaukee, WI 53218

Toll Free: (888) 686-3472
Direct: (262) 242-4300
FAX: (414) 462-0214
E-mail: manitoutech@hayesbicycle.com
Web site: www.manitoumtb.com

Casting Removal

1. From the left leg dropout (Left when sitting on the bike), use a 10 or 11mm wrench to remove the compression rod screw. **(Fig. 1)**

2. From the right leg dropout, if the fork has adjustable rebound, the knob will need to be removed. Screw the rebound all the way in (clockwise) remove the 2mm hex screw inside the knob by turning it counter clockwise. Remove the knob by pulling gently away from the fork. **(Fig. 2)**

3. Use an 8mm hex wrench to turn the damper clockwise until it can be pushed into the casting. **(Fig. 3)**

4. Remove crown/steer/inner leg assembly from the outer leg casting by pulling firmly on the casting. If the fork uses the Semi bath Lubrication system, use caution as the oil that is in the casting will be released when the casting is removed, it is best to do this over some type of catch pan.

FIG. 1

FIG. 2

FIG. 3

MRD Casting Removal

1. From the left leg dropout (Left when sitting on the bike), use a 10 or 11mm wrench to remove the compression rod screw. **(Fig. 1)**

FIG. 1

2. Remove the blue rebound knob on the bottom of the right leg with a 1.5mm Allen wrench. Be cautious of the detent balls and springs under the knob as they are very small and easily lost. **(Fig. 2)**

FIG. 2

3. Remove the detent balls and springs from the Detent Housing. **(Fig. 3)**

4. Remove the Detent housing by unscrewing it counter-clockwise using a green Park Tool pin spanner (or similar tool) inserted into the holes that the springs and detent balls sit in. **(Fig. 4)**

5. Using a 7mm or 8mm Allen wrench, turn the rebound assembly **clockwise** until it can be pushed into the casting. **(Fig. 5)**

FIG. 3

6. Remove crown/steer/inner leg assembly from the outer leg casting by pulling firmly on the casting. The fork uses the Semi bath Lubrication system, use caution as the oil that is in the casting will be released when the casting is removed, it is best to do this over some type of catch pan.

FIG. 5

FIG. 4

Dust Seal Replacement

FIG. 1

1. Before replacing the dust seals you will need to remove the lower casting. Refer to the Casting Removal or MRD Casting Removal instructions depending on which model fork you have.

2. To remove the dust seals, first remove the seal tension springs (otherwise they will get damaged), then take a large flat-bladed screwdriver and insert the tip between the bottom of the seal and the top of the foam wiper. **(Fig. 1)**

FIG. 2

3. Push down on the screwdriver. This will pop the seal out of the casting. Next remove the foam oil ring. **(Fig. 2)**

4. Oil the foam rings (new or after cleaning the old rings) with a small amount of semi-bath oil and place them in the top of the casting above the Upper Bushings. **(Fig. 3)**

FIG. 3

5. Install the dust seal into the leg, use a large socket or piece of round tubing that is large enough in diameter to press on the outside shoulder of the seal rather than putting pressure on the sealing lip and spring so that they are not damaged. **(Fig. 4)** Repeat steps 1-4 for the opposite casting leg.

FIG. 4

Coil Spring Service

1. Using a 2mm Allen wrench, remove the knob from the preload adjuster. **(Fig. 1)**

2. Remove the preload adjuster from the fork using a 20mm socket. **(Fig. 2)**

3. Pull the coil spring out of the stanchion leg.

4. Remove travel spacer and bottom out bumper from the end of the compression rod assembly. **(Fig. 3)**

5. Remove the compression rod assembly from the stanchion leg. The compression rod comes out from the top of the stanchion leg. Turn the fork sideways or upside down to get the compression rod out of the leg. **(Fig. 4)**

6. Inspect compression rod and top-out bumper. If damaged replace.

7. Install compression rod assembly into the stanchion leg. Insert through the top of the stanchion leg and maneuver the rod until it drops through the hole at the bottom of the stanchion leg.

8. Lightly grease the spring and install into stanchion leg.

9. Install the preload adjuster into the fork leg. Tighten down using a 20mm socket to 5,1- 6,2 Nm (45-55 in. lbs).

10. Using a 2mm Allen wrench, install the preload knob onto the adjuster. Tighten knob down to 0,5-0,7 Nm (4-6 in. lbs).

11. Install bottom-out bumper and travel spacer onto the end of the compression rod.

FIG 1

FIG 2

FIG 3

FIG 4

12. The casting needs to be removed prior to servicing the coil spring. Refer to the Casting Removal Instructions first.

13. Turn the preload knob counter-clockwise until it stops to relieve the preload on the spring.

TRAVEL CONVERSION ON MATCH AND CIRCUS COMP 80/100MM FORKS

1. The Match/Circus Comp 80 and 100mm forks can be converted to either travel by moving a spacer on the compression rod. Follow steps 1-7 to remove the compression rod form the fork.

2. The travel of the fork is determined by a plastic spacer. The spacer being on top of the flange on the compression rod will cause the fork to have 100mm of travel. **(Fig. 5)**. The spacer being on the bottom on the flange will cause the fork to have 80mm of travel. **(Fig. 6)**

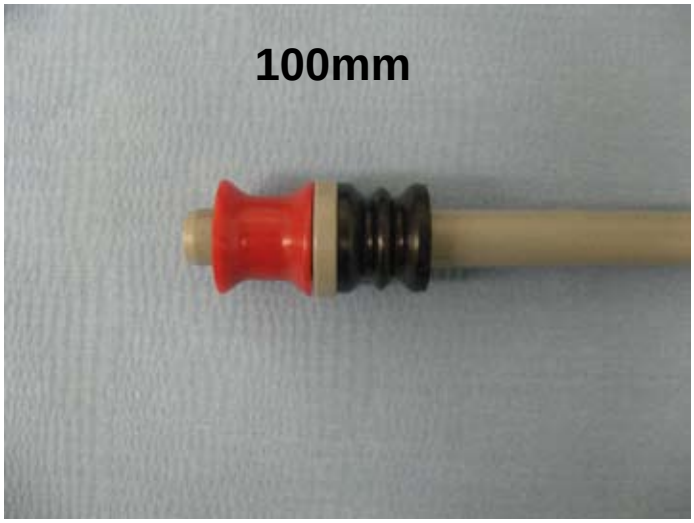

FIG. 5

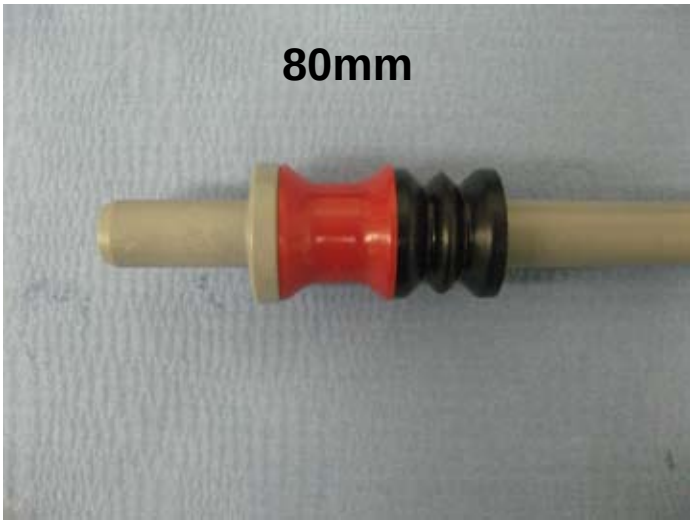

FIG. 6

MARS Air Spring Service

WARNING This fork uses compressed air to provide spring resistance and must be relieved of pressure prior to servicing. Failure to relieve air pressure could result in injury or possible death.

WARNING All top caps for Damper and Spring systems must be properly tightened prior to use. Failure to do so could result in injury or possible death.

FIG. 1

1. Before servicing the Mars Air System you will need to remove the lower casting. Refer to the Casting Removal or MRD Casting removal instructions depending on which fork model you have.

2. Release the air from the fork by depressing the valve core on the Schrader valve.

3. Remove the air cap from the fork using a 20mm socket. **(Fig. 1)**

4. Unthread the compression rod assembly from the bottom of the stanchion using a 22mm wrench and remove from fork. **(Fig. 2)**

5. Remove the spring from the stanchion. **(Fig. 3)**

6. Remove the air pushrod from the stanchion by pulling it out with needle nose pliers or by turning the fork upside down and letting it fall out. **(Fig. 4)**

7. The next step is to remove the air piston. First look up into the stanchion leg from the bottom. You will see an air shelf in the fork with a hole in the center of it. You will want to push the air piston out the top of the stanchion leg with a long Allen wrench or similar tool. When inserting the tool into the stanchion leg you must be sure it goes through the center hole of the air shelf to push the piston out. The air shelf should never be removed from the fork. Doing so would damage the fork and require you to replace the crown/steer assembly of the fork.

FIG. 2

FIG. 3

FIG. 4

8. Apply grease around the side of the new air piston. We suggest using Manitou Prep M grease. **(Fig. 5)**

9. Install air piston into the top of the stanchion leg and push it past the threads. **(Fig. 6)**

10. Pour in 5cc's of semi-bath oil on top of the air piston. **(Fig. 7)**

11. Install air cap onto the stanchion leg using a 20mm socket and tighten to 6,8-8,0 Nm [60-80 lbf*in]

12. Turn the fork upside down and insert the air pushrod into the bottom of the stanchion. The long end of the pushrod goes towards the top of the fork and must drop through the center hole of the air shelf discussed in Step 7. Drop the pushrod into the stanchion leg and maneuver it until you feel it drop through the center hole.

13. Lightly grease the spring and insert into the stanchion leg.

14. Install compression rod assembly into the stanchion leg using a 22mm wrench and tighten down to 6,8-8,0 Nm [60-80 lbf*in]

FIG. 5

FIG. 6

FIG. 7

TS AIR SERVICE

WARNING **This fork uses compressed air to provide spring resistance and must be relieved of pressure prior to servicing. Failure to relieve air pressure could result in injury or possible death.**

1. Before servicing the TS Air system you will need to remove the lower casting. Refer to the Casting Removal or MRD Casting removal instructions depending on which fork model you have.

2. Release all air from the system by depressing the valve core on the Schrader valve.

3. Using a 20mm socket, remove the air cap from the fork. **(Fig. 1)**

4. Remove compression rod assembly from the bottom of the stanchion using a 22mm wrench. **(Fig. 2 & 3)**

5. Using a long Allen wrench or similar tool, push the air piston down and out the bottom of the stanchion leg. **(Fig. 4)**

6. Apply grease around the side of the new air piston. We suggest using the Manitou Prep M grease. **(Fig. 5)**

7. Install air piston into the fork stanchion. Install by pushing the piston in through the top of the stanchion and push it past the threads. **(Fig. 6)**

8. Install compression rod assembly into the bottom of the stanchion and tighten down the end cap using a 22mm wrench. Tighten to 9,0–11,3 Nm [80-100 lbf*in]

9. Pour in 5cc's of semi-bath oil on top of the air piston.

FIG. 1

FIG. 2

FIG. 3

FIG. 4

FIG. 5

FIG. 6

ACT Air Service

WARNING This fork uses compressed air to provide spring resistance and must be relieved of pressure prior to servicing. Failure to relieve air pressure could result in injury or possible death.

1. The casting needs to be removed prior to servicing the ACT Air system. Refer to the Casting Removal section for instructions on how to do this.

2. Release all air from the system by depressing the valve core on the Schrader valve.

3. Using a 20mm socket or wrench remove the top air cap assembly from the fork. **(Fig. 1)**

4. Remove the spring from the fork. **(Fig. 2)**

5. Using a 22mm wrench unthread the compression rod assembly end cap and remove the assembly from the fork uppers. **(Fig. 3)**

6. Replace the air piston o-ring on the compression rod assembly. **(Fig. 4)**

7. Apply a small amount of grease to the o-ring and insert compression rod assembly back into the fork uppers. Tighten the end cap down to 9.0-11.3 Nm (80-100 in. lbs)

8. Grease the spring and place it into the fork uppers from the top.

9. Install air cap. Tighten down to 6.8-9.0 Nm (60-80 in. lbs)

10. Using a shock pump, fill fork to desired air pressure.

FIG. 1

FIG. 2

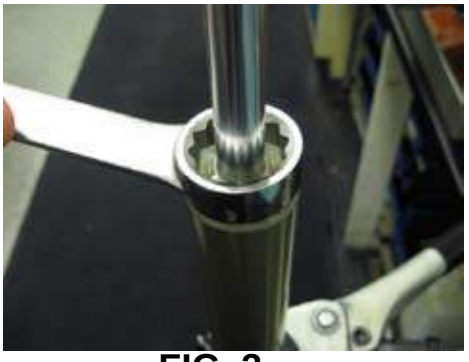

FIG. 3

FIG. 4

TRAVEL CONVERSION ON DRAKE/CIRCUS EXPERT/MINUTE EXPERT 80 and 100mm FORKS

1. The Drake 80 and 100mm forks can be converted to either travel by moving a spacer on the compression rod assembly. Follow Steps 1-5 above to remove the compression rod assembly.

2. The travel of the fork is determined by a plastic spacer. The spacer being on the bottom of the air piston will cause the fork to have 80mm of travel. The spacer being on top of the piston will cause the fork to have 100mm of travel. **Fig. 5** on this page shows the placement of the spacer for 80mm of travel. **Fig. 6** on this page shows the placement of the spacer for 100mm of travel.

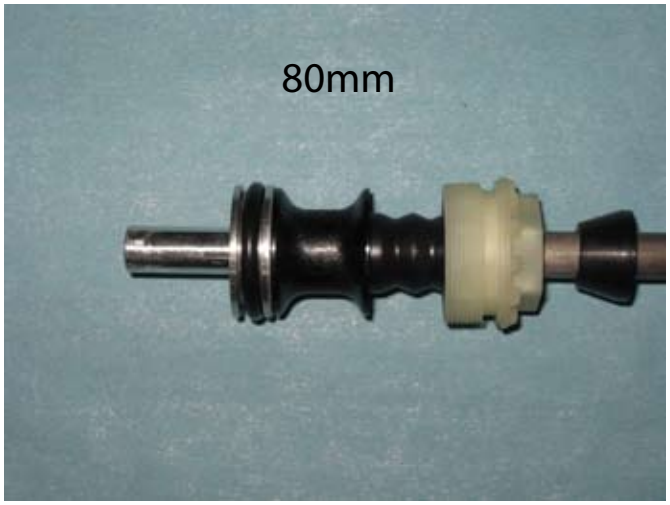

FIG. 5

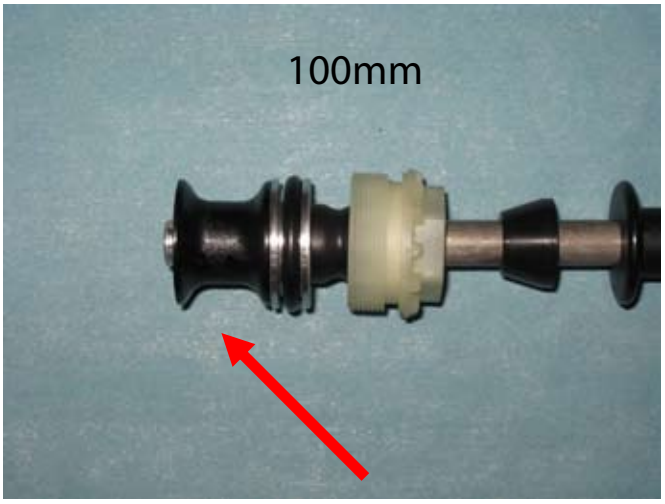

FIG. 6

ISO Air Spring Service

WARNING This fork uses compressed air to provide spring resistance and must be relieved of pressure prior to servicing. Failure to relieve air pressure could result in injury or possible death.

WARNING All top caps for Damper and Spring systems must be properly tightened prior to use. Failure to do so could result in injury or possible death.

FIG. 1

1.Before servicing the Mars Air System you will need to remove the lower casting. Refer to the Casting Removal or MRD Casting removal instructions depending on which fork model you have.

2. Release the air from the fork by depressing the valve core on the Schrader valve.

3. Remove the air cap from the fork using a 20mm socket. **(Fig. 1)**

4. Unthread the compression rod assembly from the bottom of the stanchion using a 22mm wrench and remove from fork. **(Fig. 2 &3)**

FIG. 2

FIG. 3

5. Remove the air piston from the stanchion leg. There are two ways to do this. You can use a long Allen wrench or dowel rod to push the air piston through and out the bottom of the stanchion leg. **(Fig. 4)** You can alternatively use a 6mm bolt and thread it into the center of the piston and pull it out the top of the fork leg. **(Fig. 5)** The second method is convenient when you are just servicing the air piston and do not want to disassemble the fork.

6. Apply grease around the side of the new air piston. We suggest using Manitou Prep M grease. **(Fig. 6)**

7. Install air piston into the top of the stanchion leg and push it past the threads.

8. Pour in 5cc's of semi-bath oil on top of the air piston. **(Fig. 7)**

9. Install air cap onto the stanchion leg using a 20mm socket and tighten to 6,8-8,0 Nm [60-80 lbf*in]

FIG. 4

FIG. 5

FIG. 6

FIG. 7

Absolute+ Service

Disassembly

1. The casting needs to be removed prior to servicing the damping side of the fork. Refer to the Casting Removal instructions.

2. Using a 2mm Allen wrench, remove the adjuster knob from the top of the fork. **(Fig. 1)** Be careful when removing the knob as there are two detent ball bearings under it. Remove the detent ball bearings and springs.

FIG. 1

3. Using a 24mm socket remove the Absolute+ damper from the stanchion leg. **(Fig. 2)**

4. Pour the damping oil out of the stanchion leg.

5. Turn the fork upside down and using a 22mm box end wrench, remove the rebound damper assembly from the stanchion. **(Fig. 3)**

FIG. 2

6. Check o-rings on rebound and compression assemblies and replace any that are worn or damaged.

Assembly

1. Install the rebound damper assembly into the bottom of the stanchion leg. Using a 22mm box end wrench tighten down to 9,0-11,3 Nm [80-100 lbf*in].

2. The next step is to fill the fork with oil and install the compression damper. To ensure proper oil height the casting must be installed prior to filling. If you have other service to perform on the fork continue onto the appropriate section and finish that first. If not refer to the Casting Installation instructions to install the casting back onto the fork.

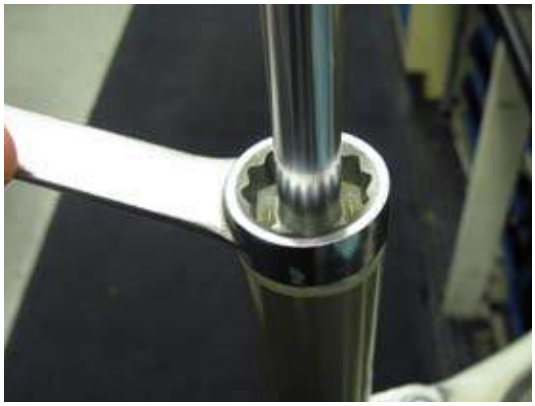

FIG. 3

3. Once the casting is installed you are ready to fill the fork with oil. Pour oil into the stanchion leg until it is about a quarter of the way up. **(Fig. 4)** Cover the hole in the stanchion with a rag and cycle the fork 7-10 times. Failure to do this will cause an incorrect oil height. After cycling the fork, continue filling the stanchion leg with oil to the oil height specified on the Oil Height Chart found in this manual for your fork model.

FIG. 4

4. Install the Absolute+ damper into the stanchion and tighten down using a 24mm socket to 6,8-9,0 Nm [60-80 lbf*in].

5. Install detent springs and ball bearings into the holes on the top cap. You want them placed in holes opposite of each other. **(Fig. 5)**

FIG. 5

6. Install adjuster knob and using a 2mm Allen wrench tighten down to 0,5-0,7 Nm [4-6 lbf*in].

Absolute+ MRD Service

Disassembly

1. The casting will need to be removed prior to servicing the damping side of the fork. Refer to the MRD Casting Removal Instructions.

2. Using a 2mm Allen wrench, remove the adjuster knob from the top of the fork leg. **(Fig. 1)** Be careful when removing the knob as there are two detent ball bearings below the knob. Remove the detent springs from the top cap.

3.Remove the Absolute+ damper from the stanchion leg using a 24mm socket. **(Fig. 2)**

4. Pour the damping oil out of the fork leg.

5. Turn the fork upside down and using a 15mm open end wrench, unthread the rebound damping assembly from the bottom of the stanchion. **(Fig. 3)** The rebound assembly will come out of the fork leg with the cartridge tube attached to it. **(Fig. 4)** If you are replacing the tube or the damper, pull the cartridge tube off the damper end cap. The tube is tightly fit into the damper cap so it can be difficult to get off.

6. Check o-rings on rebound damper end cap and ABS+ compression damper top cap and replace if damaged or worn.

FIG. 1

FIG. 2

FIG. 3

FIG. 4

Assembly

1. If you replaced the rebound damper cartridge or cartridge tube you will need to press the tube back onto the damper assembly end cap. First slide the damper end cap all the way to the top of the assembly (top is towards the piston head). Next slide the tube over the piston head and press it into the end cap.
2. Install the rebound damper/cartridge tube assembly into the bottom of the stanchion leg. Using a 15mm open end wrench tighten the end cap down to 9,0-11,3 Nm [80-100 lbf*in].
3. The next step is to fill the fork with oil and install the compression damper. To ensure proper oil height the casting must be installed prior to filling. If you have other service to perform on the fork continue onto the appropriate section and finish that first. If not refer to the MRD Casting Installation Instructions to install the casting back onto the fork.

4. Once the casting is installed you are ready to fill the fork with oil. Insert a small funnel or similar device into the top of the cartridge tube. **(Fig. 5)** Pour a small amount of oil (10cc's) into the cartridge tube. Remove the funnel and cover the top of the tube with a rag. Cycle the fork 7-10 times. This is to ensure the oil gets under the rebound piston. Failure to do this will cause your oil level to drop below the proper level. After cycling the fork insert the funnel back into the cartridge tube and fill the fork to the specified oil height found on the Oil Height Chart in this manual.

5. Install the Absolute+ damper into the cartridge tube and using a 24mm socket tighten down to 6,8-9,0 Nm [60-80 lbf*in]. **(Fig. 6)**

6. Install detent springs and ball bearings into the holes on the top cap. You want to place them in holes opposite of each other. **(Fig. 7)**

7. Install adjuster knob onto the hex and using a 2mm Allen wrench tighten down to 0,5-0,7 Nm [4-6 lbf*in].

FIG. 5

FIG. 6

FIG. 7

Casting Installation

1. Slide the lower casting onto the upper stanchions. You want to slide them on only about halfway at this point.

2. Inject 16cc's of semi-bath oil into the lower legs using a syringe or similar tool. **(Fig. 1)**

3. Slide the casting all the way onto the upper stanchions.

4. Insert the compression rod bolt into the compression rod and tighten down using either a 10 or 11mm wrench depending on fork model. Tighten 5,1-6,2 Nm [45-55 lbf*in]. **(Fig. 2)**

5. Using an 8mm Allen wrench, thread the rebound damper assembly into the casting by turning it counter-clockwise. Tighten to 3,4-4,5 Nm [30-40 lbf*in]. **(Fig. 3)**

6. Install rebound knob onto the rebound shaft using a 2mm Allen wrench. **(Fig. 4)**

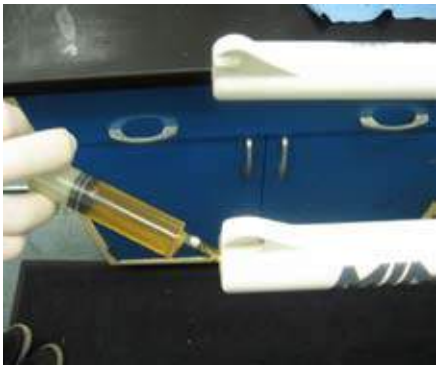

FIG. 1

FIG. 2

FIG. 3

FIG. 4

MRD Casting Installation

1. Slide the lower casting onto the upper stanchions. You want to slide them on only about halfway at this point.

2. Inject 16cc's of semi-bath oil into the lower legs using a syringe or similar tool. **(Fig. 1)**

3. Slide the casting all the way onto the upper stanchions.

4. Insert the compression rod bolt into the compression rod and tighten down using either a 10 or 11mm wrench depending on fork model. Tighten to the torque specified in the back of the manual. **(Fig. 2)**

5. Using an 8mm Allen wrench, thread the rebound damper assembly into the casting by turning it counter-clockwise. Tighten to 3,4-4,5 Nm [30-40 lbf*in]. **(Fig. 3)**

6. Thread the detent housing on the rebound damper assembly threads using a green Park Tool pin spanner or similar tool. **(Fig. 4)**

7. Place springs and detent ball bearings into the detent housing. **(Fig. 5)**

8. Install rebound knob onto the rebound shaft using a 1.5mm Allen wrench. **(Fig. 6)**

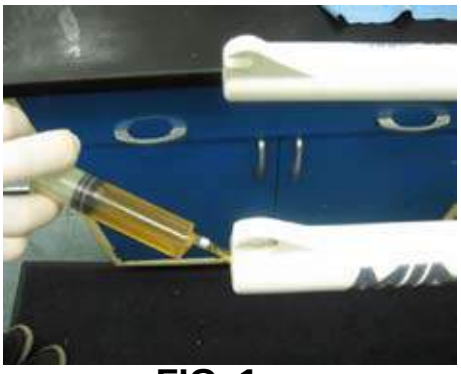

FIG. 1

FIG. 2

FIG. 3

FIG. 4

FIG. 5

FIG. 6

OIL HEIGHT CHART

Oil Height Guide:

1. Oil height is set with compression damper (Absolute+) removed.
2. Oil height is set with the fork fully extended (ride height).

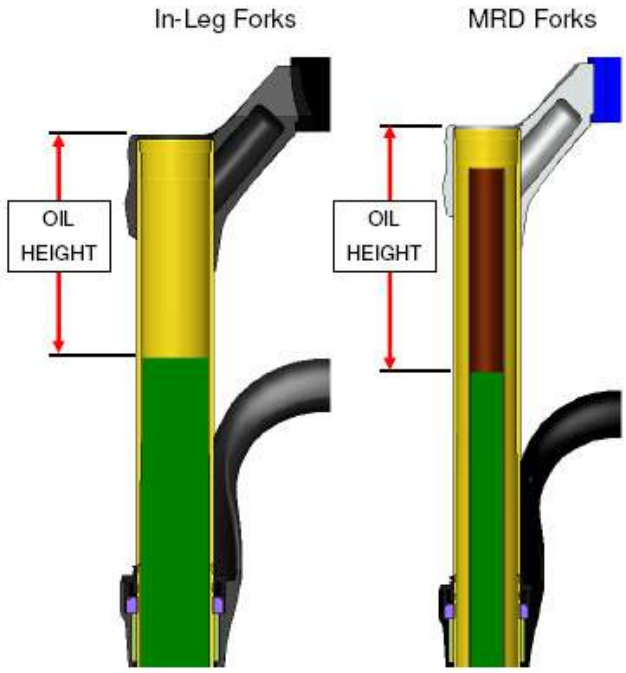

FORK	TRAVEL	OIL HEIGHT (mm)	
		Nominal	Range
Circus Comp/Match	80/100mm	83	80-85
Match	130mm	83	80-85
Circus Expert/Minute Expert	80/100mm	87	85-90
Circus Expert/ Minute Expert	130mm	87	85-90
R7	80mm	83	80-85
R7	100mm	83	80-85
Minute Pro	100mm	87	85-90
Minute Pro	120mm	87	85-90
Minute Pro	140mm	87	85-90
Tower Expert	80mm	87	85-90
Tower Expert	100mm	87	85-90
Tower Expert	120mm	87	85-90
Tower Pro	80mm	87	85-90
Tower Pro	100mm	87	85-90
Tower Pro	120mm	87	85-90
R7 MRD	80mm	103	100-105
R7 MRD	100mm	108	105-110
Marvel Expert	80/100mm	87	85-90
Marvel Pro	100mm	108	105-110
Marvel Pro	120mm	113	110-115

Circus Comp Exploded View

Part Description	Part Number	Kit Group
1. Outer Casting QR NB - Black	141-23994-K015	E
1. Outer Casting QR NB - White	141-23994-K016	E
1. Outer Casting TA NB - Black	141-23994-K025	E
1. Outer Casting TA NB - White	141-23994-K026	E
2. Bushing Kit	141-27181-K007	E
3. Seal Kit	85-5293	K
4. Rebound Damper Assembly	141-27220-K001	B
5. Absolute+ Damper	141-26532-K006	A
6. Crown/Steer/Leg 80/100 Steel	141-27181-K005	D
6. Crown/Steer/Leg 80/100 Blk Crwn	141-27220-K004	D
6. Crown/Steer/Leg 80/100 Wht Crwn	141-27220-K005	D
7. Preload Adjuster	141-27181-K002	C
8. Ride Kit – Soft – 80/100	141-26686-K001	G
8. Ride Kit – Medium – 80/100	141-26686-K002	G
8. Ride Kit – Firm – 80/100	141-26686-K003	G
9. Compression Rod	141-27181-K003	H

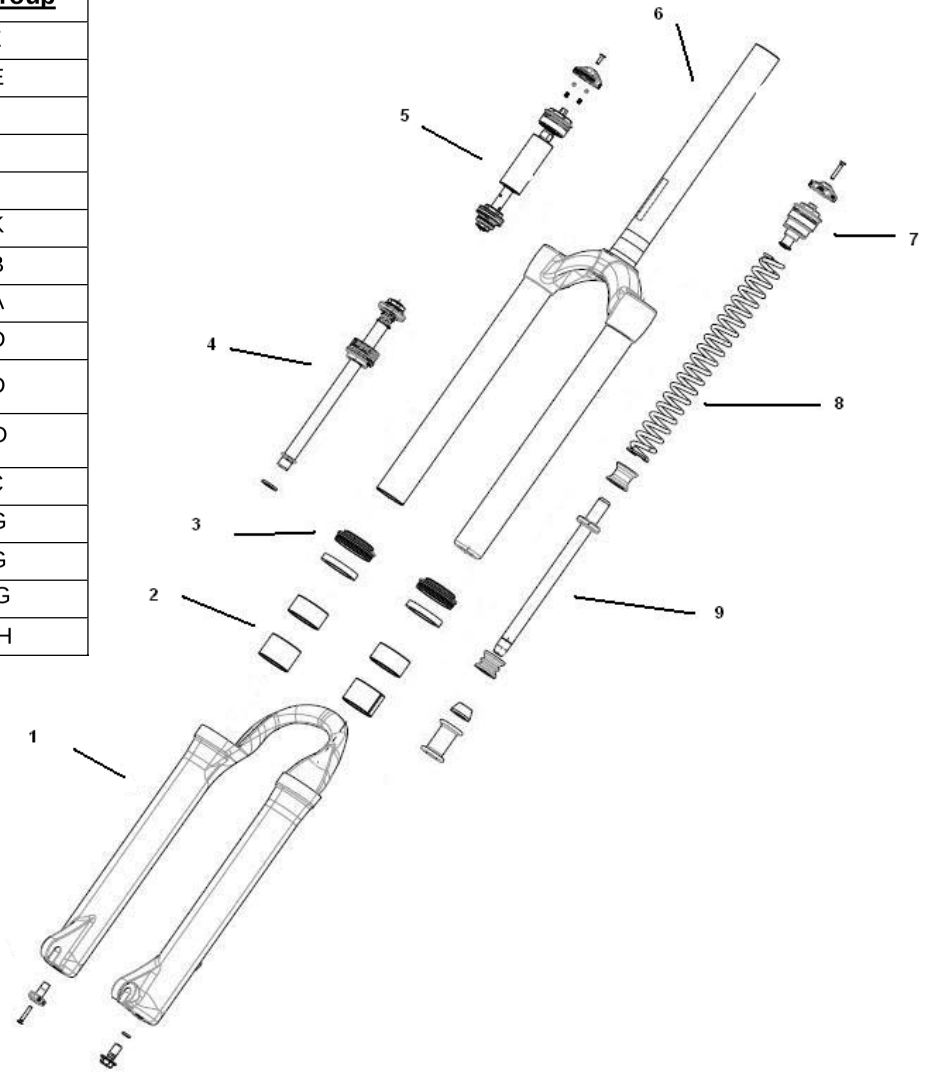

Circus Expert Fork Schematic

Part Description	Part Number	Kit Group
1. Compression Rod 80/100	141-23999-K003	H
1. Compression Rod 130	141-23999-K003	H
2. Ride Kit – Soft – 80/100	141-23998-K001	G
2. Ride Kit – Medium – 80/100	141-23998-K004	G
2. Ride Kit – Firm – 80/100	141-23998-K007	G
2. Ride Kit – Soft - 130	141-23998-K003	G
2. Ride Kit – Medium - 130	141-23998-K006	G
2. Ride Kit – Firm - 130	141-23998-K009	G
3. Air Preload Cap	141-23992-K002	C
4. Crown/Steer/Leg 80/100 Blk Crwn	141-27220-K006	D
4. Crown/Steer/Leg 80/100 Wht Crwn	141-27220-K007	D
4. Crown/Steer/Leg 130 Blk Crwn	141-27220-K008	D
4. Crown/Steer/Leg 130 Wht Crwn	141-27220-K009	D
5. Absolute+ Damper	141-26532-K007	A
6. Rebound Damper 80/100	141-27220-K002	B
6. Rebound Damper 130	141-27220-K003	B
7. Seal Kit	85-5293	K
8. Bushing Kit	141-27181-K007	E
9. Outer Casting QR NB Black	141-23994-K015	E
9. Outer Casting QR NB White	141-23994-K016	E
9. Outer Casting TA NB Black	141-23994-K025	E
9. Outer Casting TA NB White	141-23994-K026	E
10. Knob Kit	141-27177-K001	I

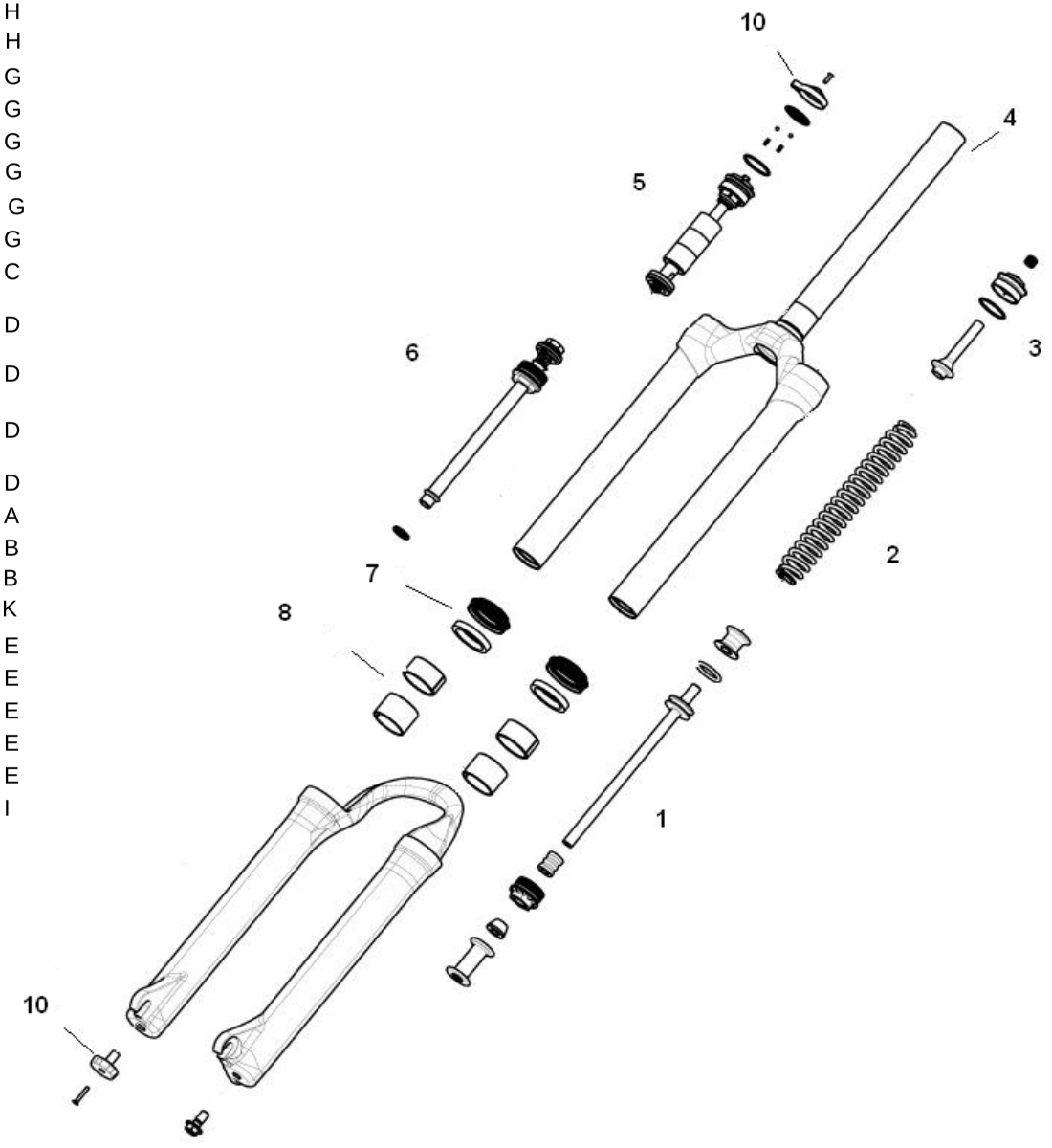

Marvel Expert Fork Schematic

Part Description	Part Number	Kit Group
1. Crown/Steer/Assembly, 1 1/8 Steer, 100mm, Blk Crwn	141-28131-K007	D
1. Crown/Steer/Assembly, 1 1/8 Steer, 100mm, Wht Crwn	141-28131-K005	D
1. Crown/Steer/Assembly, 1 1/8 Steer, 120mm, Blk Crwn	141-28131-K008	D
1. Crown/Steer/Assembly, 1 1/8 Steer, 120mm, Wht Crwn	141-28131-K006	D
1. Crown/Steer/Assembly, Taper Steer, 100mm, Blk Crwn	141-28131-K011	D
1. Crown/Steer/Assembly, Taper Steer, 100mm, Wht Crwn	141-28131-K009	D
1. Crown/Steer/Assembly, Taper Steer, 120mm, Blk Crwn	141-28131-K012	D
1. Crown/Steer/Assembly, Taper Steer, 120mm, Wht Crwn	141-28131-K010	D
2. Knob Kit	141-28131-K017	I
3. Absolute+ Damper Assembly	141-26532-K010	A
4. Rebound Damper Assembly	141-28131-K018	B
5. Outer Casting, QR NB, Black	141-27988-K018	E
5. Outer Casting, QR NB, White	141-27988-K017	E
5. Outer Casting, QR15 NB, Black (QR15 axle included)	141-27988-K020	E
5. Outer Casting, QR15 NB, White (QR15 axle included)	141-27988-K019	E
6. QR15 Axle	141-28131-K016	E
7. QR15 Axle Hardware (insert & endcap)	141-28131-K024	E
8. Bushing Kit	85-5964	E
9. Seal Kit	85-5293	K
10. Compression Rod Assembly, 100mm	141-28131-K013	H
10. Compression Rod Assembly, 120mm	141-28131-K014	H
11. Air Piston	141-28131-K015	G
12. Air Cap	141-27988-K013	C

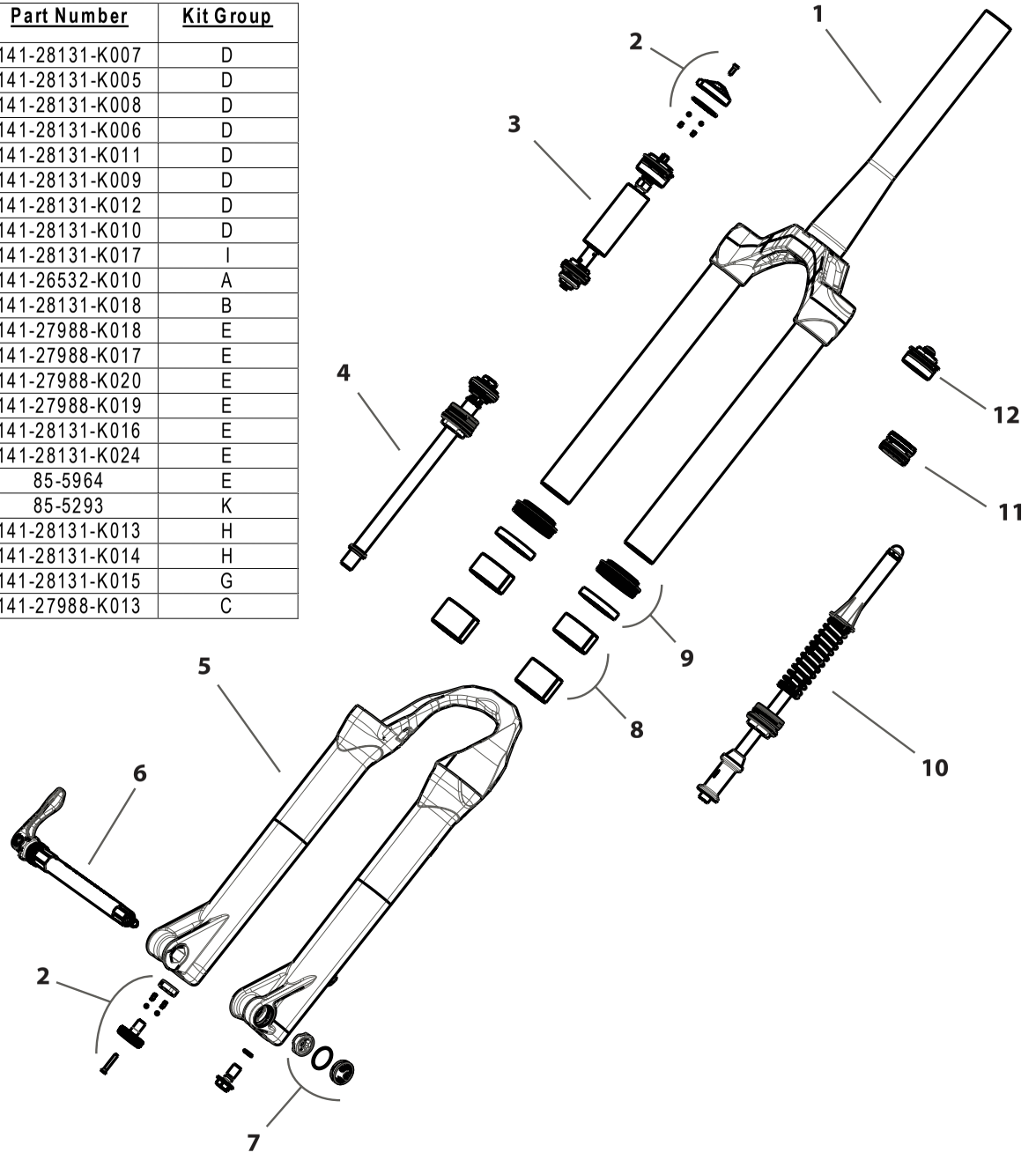

Marvel Pro Fork Schematic

Part Description	Part Number	Kit Group
1. Crown/Steer/Assembly, 1 1/8 Steer, 100mm, Blk Crwn	141-28131-K007	D
1. Crown/Steer/Assembly, 1 1/8 Steer, 100mm, Wht Crwn	141-28131-K005	D
1. Crown/Steer/Assembly, 1 1/8 Steer, 120mm, Blk Crwn	141-28131-K008	D
1. Crown/Steer/Assembly, 1 1/8 Steer, 120mm, Wht Crwn	141-28131-K006	D
1. Crown/Steer/Assembly, Taper Steer, 100mm, Blk Crwn	141-28131-K011	D
1. Crown/Steer/Assembly, Taper Steer, 100mm, Wht Crwn	141-28131-K009	D
1. Crown/Steer/Assembly, Taper Steer, 120mm, Blk Crwn	141-28131-K012	D
1. Crown/Steer/Assembly, Taper Steer, 120mm, Wht Crwn	141-28131-K010	D
2. Knob Kit	141-28131-K017	I
3. Cartridge Absolute + Damper Assembly	141-26532-K009	A
4. Cartridge Tube, 1 1/8 Steer, 100mm	141-28131-K003	A
4. Cartridge Tube, 1 1/8 Steer, 120mm	141-28131-K004	A
4. Cartridge Tube, Taper Steer, 100mm	141-28131-K001	A
4. Cartridge Tube, Taper Steer, 120mm	141-28131-K002	A
5. Cartridge Rebound Damper Assembly	83-3283	B
6. QR15 Axle	141-28131-K016	E
7. QR15 Axle Hardware (insert & endcap)	141-28131-K024	E
8. Outer Casting, QR NB, Black	141-27988-K018	E
8. Outer Casting, QR NB, White	141-27988-K017	E
8. Outer Casting, QR15 NB, Black (QR15 axle included)	141-27988-K020	E
8. Outer Casting, QR15 NB, White (QR15 axle included)	141-27988-K019	E
9. Bushing Kit	85-5964	E
10. Seal Kit	85-5293	K
11. Compression Rod Assembly, 100mm	141-28131-K013	H
11. Compression Rod Assembly, 120mm	141-28131-K014	H
12. Air Piston	141-28131-K015	G
13. Air Cap	141-27988-K013	C

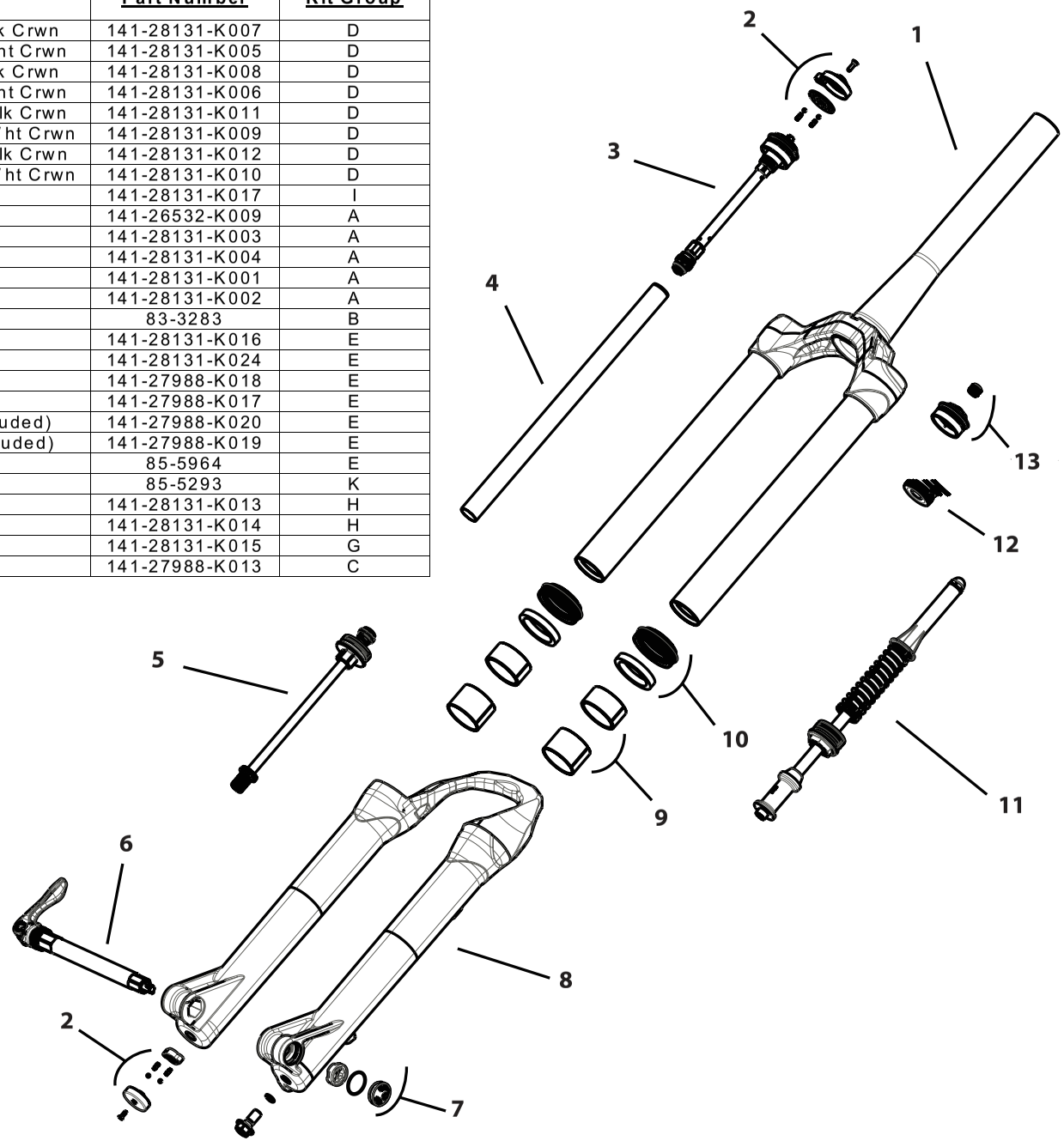

Match Exploded View

Part Description	Part Number	Kit Group
1. Outer Casting QR STD Black	141-23994-K005	E
1. Outer Casting QR STD White	141-23994-K006	E
1. Outer Casting QR NB Black	141-23994-K015	E
1. Outer Casting QR NB White	141-23994-K016	E
2. Bushing Kit	141-27181-K007	E
3. Seal Kit	141-27177-K001	K
4. Rebound Damper Assembly	141-27181-K001	B
5. Absolute+ Damper	141-25404-K003	A
6. Crown/Steer/Leg 80/100	141-27181-K005	D
6. Crown/Steer/Leg 130	141-27181-K006	D
7. Preload Adjuster	141-27181-K002	C
8. Ride Kit – Soft – 80/100	141-26686-K001	G
8. Ride Kit – Medium – 80/100	141-26686-K002	G
8. Ride Kit – Firm – 80/100	141-26686-K003	G
8. Ride kit – Soft - 130	141-26686-K004	G
8. Ride Kit – Medium - 130	141-26686-K005	G
8. Ride Kit – Firm – 130	141-26686-K006	G
9. Compression Rod 80/100	141-27181-K003	H
9. Compression Rod 130	141-27181-K004	H

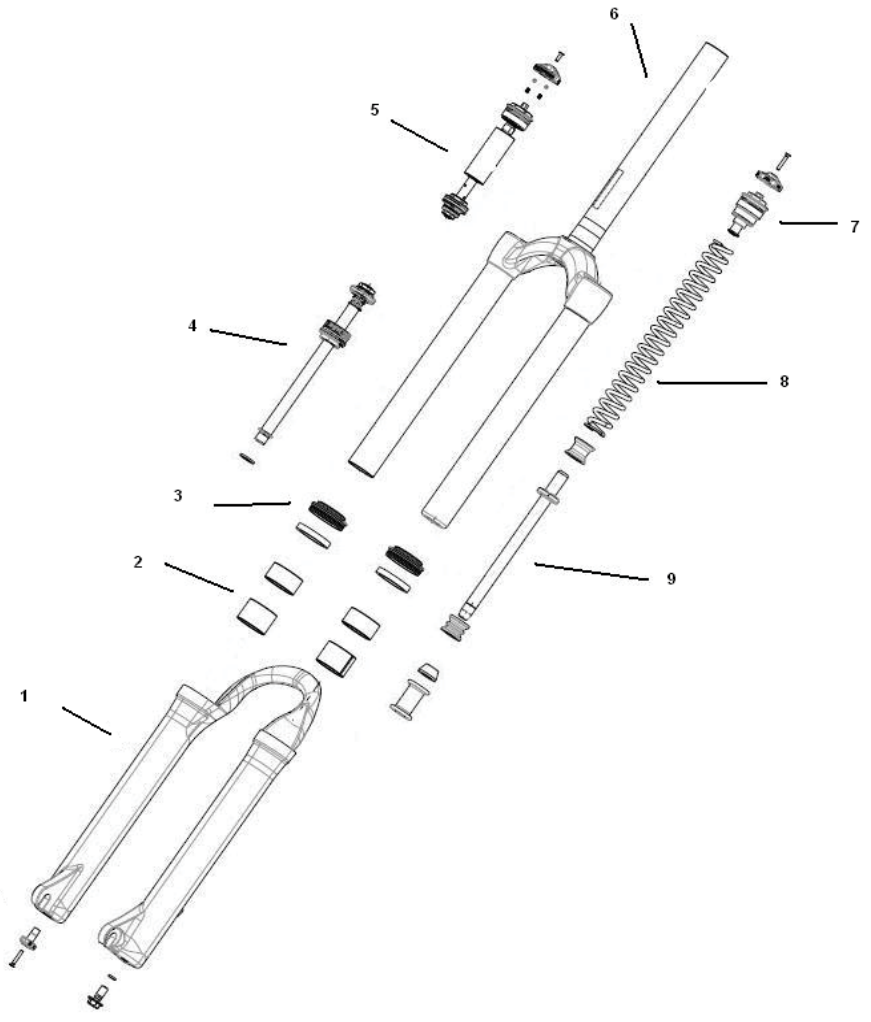

Minute Expert Fork Schematic

Part Description	Part Number	Kit Group
1. Compression Rod Assembly	141-23999-K003	H
2. Ride Kit – Soft 80/ 100	141-23998-K001	G
2. Ride Kit – Medium 80/100	141-23998-K004	G
2. Ride Kit – Firm 80/100	141-23998-K007	G
2. Ride Kit – Soft 130	141-23998-K003	G
2. Ride Kit – Medium 130	141-23998-K006	G
2. Ride Kit - Firm 130	141-23998-K009	G
3. Air Preload Cap	141-23992-K002	C
4. Crown/Steer/Leg 80/100	141-23993-K001	D
4. Crown/Steer/Leg 130	141-23993-K002	D
5. Absolute+ Damper	141-26532-K002	A
6. Rebound Damper	141-23991-K003	B
7. Seal & Wiper Kit 32mm	85-5293	K
8. Bushing Kit	85-5964	E
9. Outer Casting QR STD Black	141-23994-K005	E
9. Outer Casting QR STD White	141-23994-K006	E
9. Outer Casting QR NB Black	141-23994-K015	E
9. Outer Casting QR NB White	141-23994-K016	E
9. Outer Casting TA Black	141-23994-K025	E
9. Outer Casting TA White	141-23994-K026	E
10. Knob Kit	141-27177-K001	I

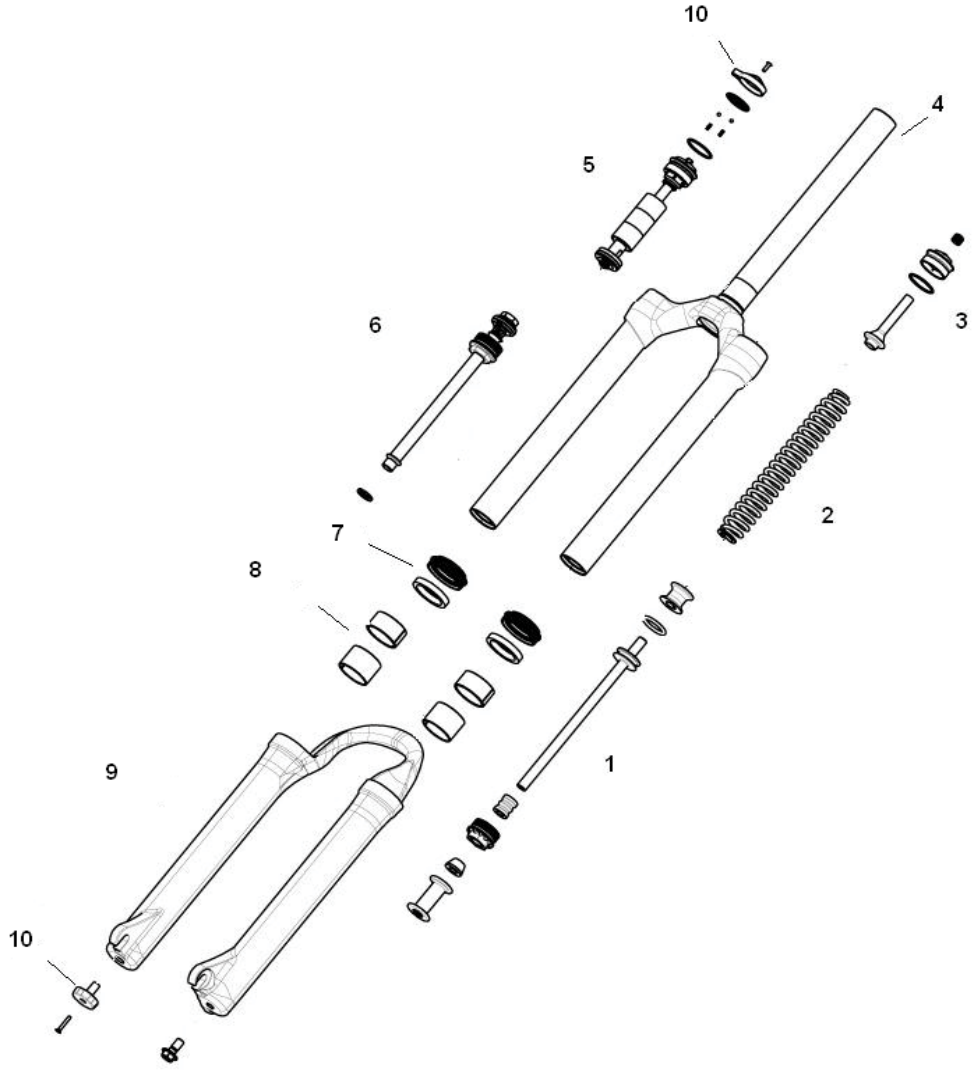

Minute Pro Fork Schematic

Part Description	Part Number	Kit Group
1. Compression Rod	83-3183	H
2. Ride Kit – Soft 100	83-3170	G
2. Ride Kit – Medium 100	83-3171	G
2. Ride Kit – Firm 100	83-3172	G
2. Ride Kit – X Firm 100	83-3173	G
2. Ride Kit – Soft 120	83-3175	G
2. Ride Kit – Medium 120	83-3176	G
2. Ride Kit – Firm 120	83-3177	G
2. Ride Kit – X Firm 120	141-26745	G
2. Ride Kit – Soft 140	141-25683-K001	G
2. Ride Kit – Medium 140	141-25683-K002	G
2. Ride Kit – Firm 140	141-25683-K003	G
2. Ride Kit – X Firm 140	141-25683-K004	G
3. Air Piston	83-3188	G
4. Air Cap	83-3150	C
5. Crown/Steer/Leg -100	83-3155	D
5. Crown/Steer/Leg -120	83-3156	D
5. Crown/Steer/Leg -140	83-3157	D
6. Absolute+ Damper	141-26532-K008	A
7. Rebound Damper	83-3341	B
8. Seal/Wiper Kit 32mm	85-5293	K
9. Bushing Kit	85-5964	E
10. Outer Casting QR – Black	141-23994-K015	E
10. Outer Casting QR – White	141-23994-K016	E
10. Outer Casting TA – Black	141-23994-K025	E
10. Outer Casting TA – White	141-23994-K026	E
11. Knob Kit	141-27177-K001	E

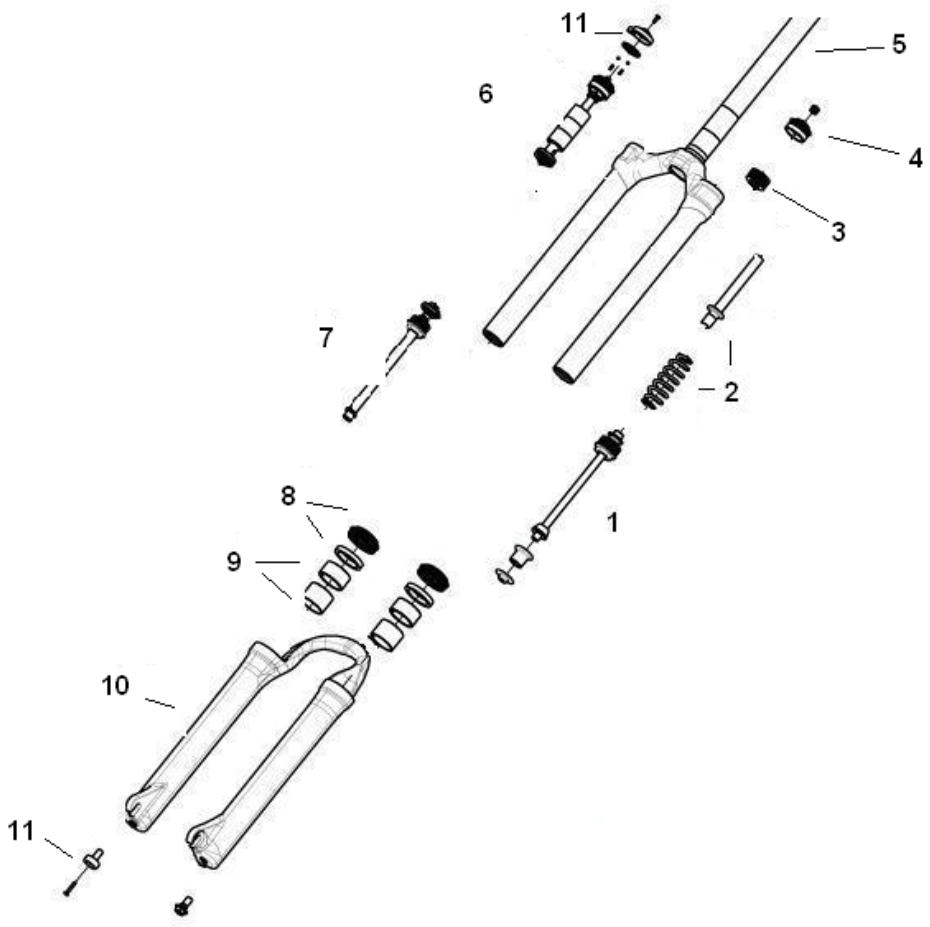

R7 MRD Schematic

Part Description	Part Number	Kit Group
1. Compression Rod Assembly – 80mm	83-3262	H
1. Compression Rod Assembly – 100mm	83-3263	H
2. Air Piston	83-2669	G
3. Air Cap	83-2654	C
4. Crown/Steer/Leg – 80mm	141-25389-K001	D
4. Crown/Steer/Leg – 100mm	141-25389-K002	D
5. Absolute+ Cartridge Damper	141-26532-K004	A
6. Cartridge Tube – 80mm	83-3270	A
6. Cartridge Tube – 100mm	83-3271	A
7. Cartridge Rebound Damper	83-3267	A
8. Bushing Kit	85-5321	E
9. Seal Kit	85-5281	K
10. Outer casting QR STD - Black	98-23561	E
10. Outer Casting QR STD White	98-23562	E
10. Outer Casting QR NB - Black	141-27200-K001	E
10. Outer Casting QR NB - White	141-27200-K002	E
11. Knob Kit	141-27177-K002	I

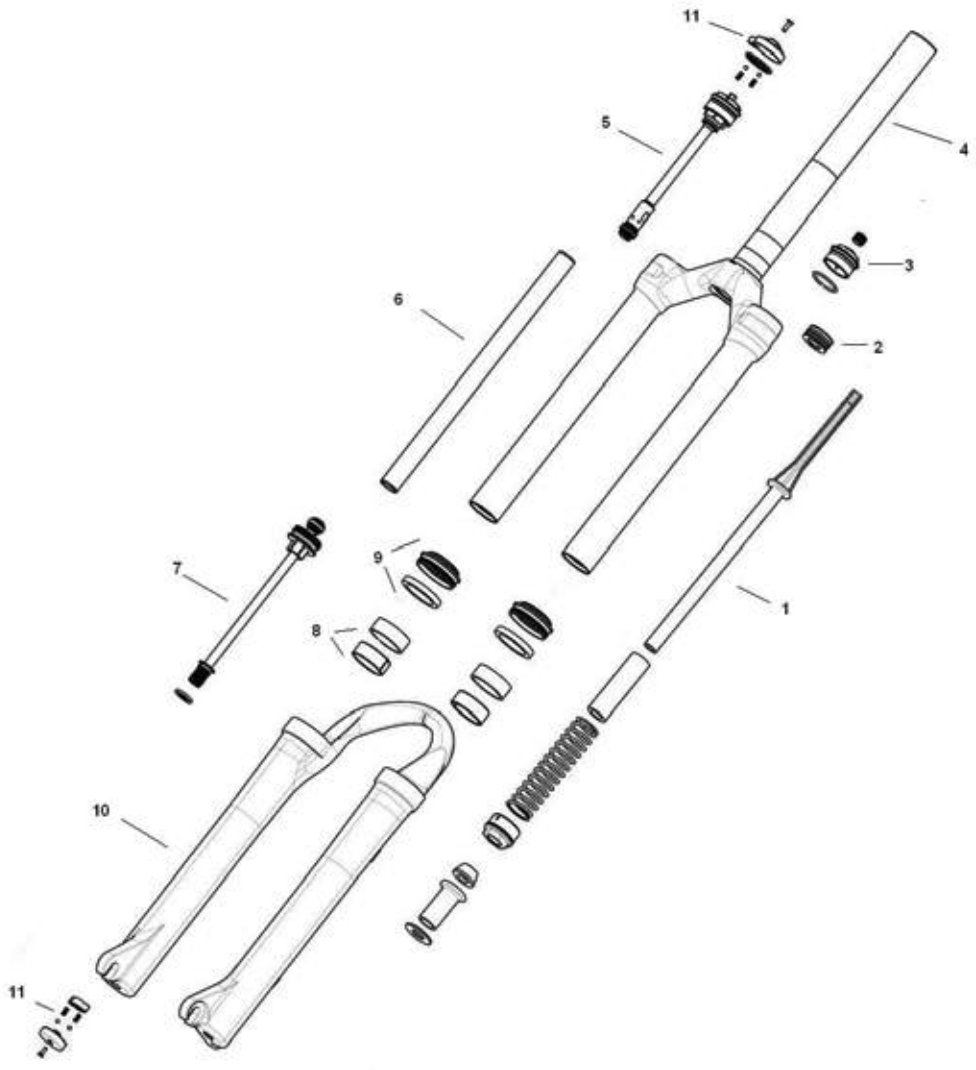

R7 Pro Fork Schematic

Part Description	Part Number	Kit Group
1. Compression Rod Assembly – 80mm	83-3262	H
1. Compression Rod Assembly – 100mm	83-3263	H
2. Air Piston	83-2669	G
3. Air Cap	83-2654	C
4. Crown/Steer/Leg – 80mm	83-2656	D
4. Crown/Steer/Leg – 100mm	83-2659	D
5. Absolute+ Damper	141-26532-K001	A
6. Rebound Damper Assembly	83-3254	B
7. Seal Kit	85-5281	K
8. Bushing Kit	85-5321	E
9. Outer casting QR STD - Black	98-23561	E
9. Outer Casting QR STD White	98-23562	E
9. Outer Casting QR NB - Black	141-27200-K001	E
9. Outer Casting QR NB - White	141-27200-K002	E
10. Knob Kit	141-27177-K003	I

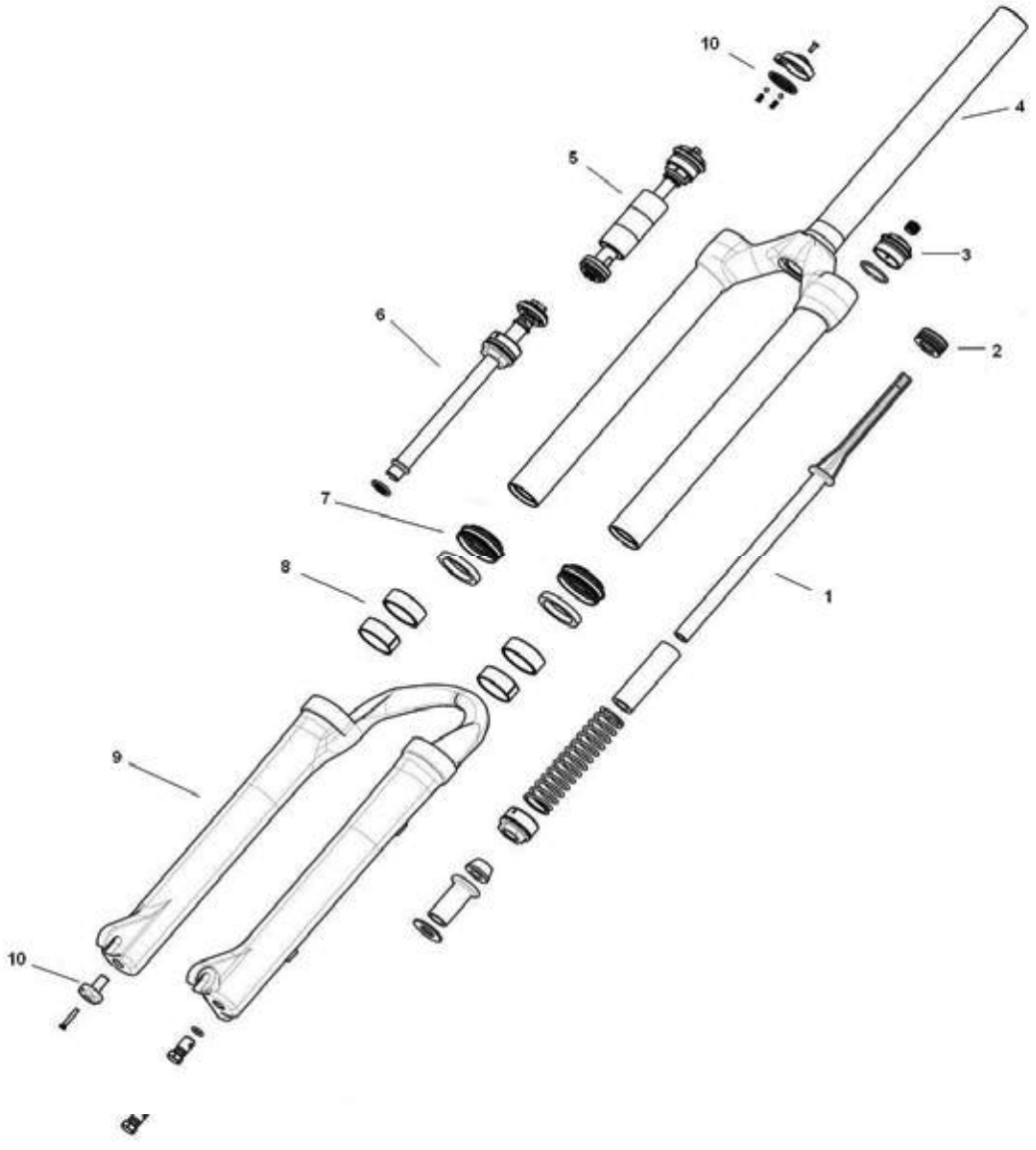

Tower Expert Fork Schematic

Part Description	Part Number	Kit Group
1. Compression Rod - Air	141-23999-K004	H
2. Ride Kit – Soft 80/ 100	141-23998-K001	G
2. Ride Kit – Medium 80/100	141-23998-K004	G
2. Ride Kit – Firm 80/100	141-23998-K007	G
2. Ride Kit – Soft 120	141-23998-K002	G
2. Ride Kit – Medium 120	141-23998-K006	G
2. Ride Kit - Firm 120	141-23998-K008	G
3. Air Preload Cap	141-23992-K002	C
4. Crown/Steer/Leg 80/100	141-23993-K004	D
4. Crown/Steer/Leg 120	141-23993-K005	D
5. Absolute+ Damper	141-26532-K002	A
6. Rebound Damper	141-23991-K004	B
7. Seal & Wiper Kit 32mm	85-5293	K
8. Bushing Kit	85-5964	E
9. Outer Casting QR NB Black	83-3302	E
9. Outer Casting QR NB White	141-23994-K031	E
9. Outer Casting TA Black	83-3303	E
9. Outer Casting TA – White	141-23994-K036	E
10. Knob Kit	141-27177-K001	I

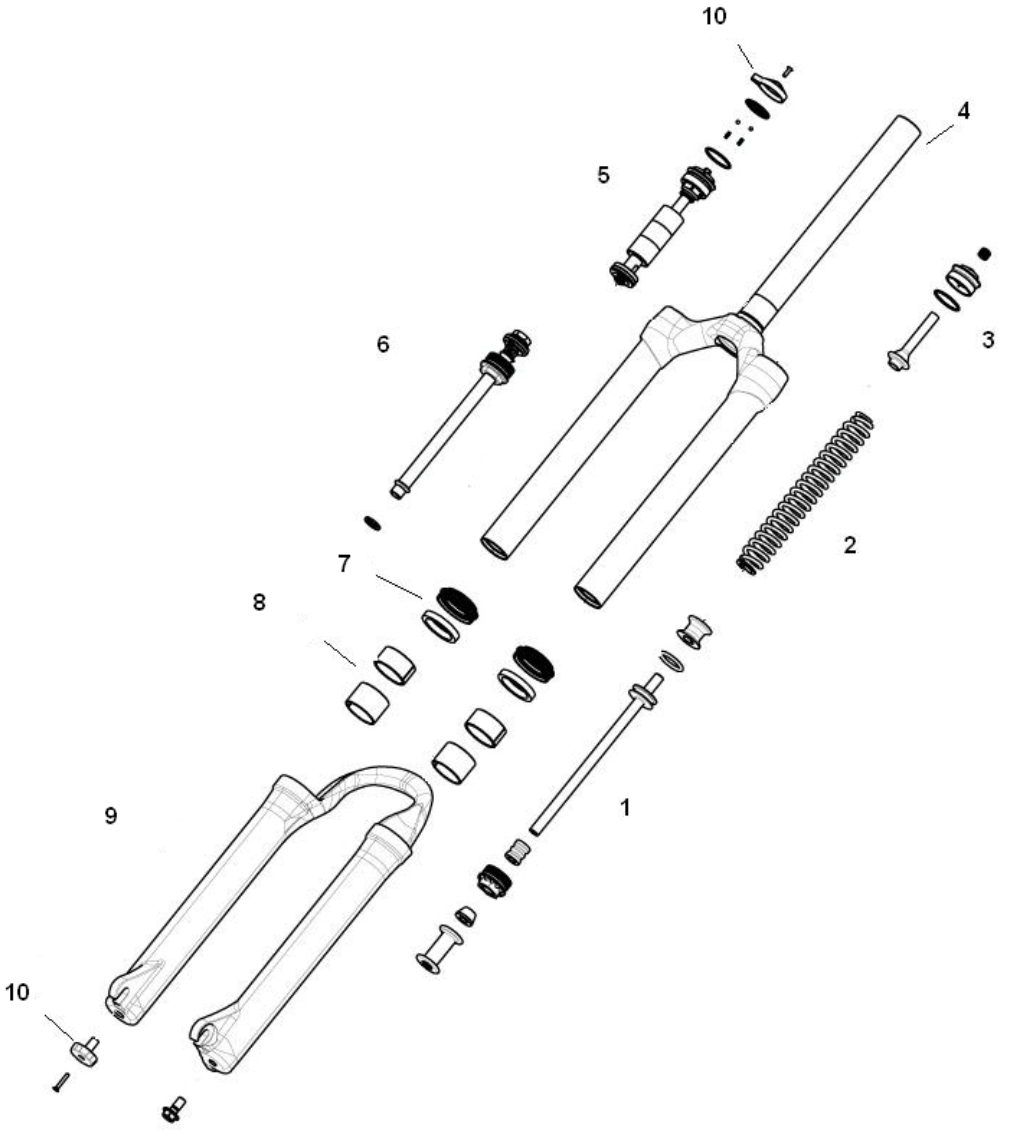

Tower Pro Fork Schematic
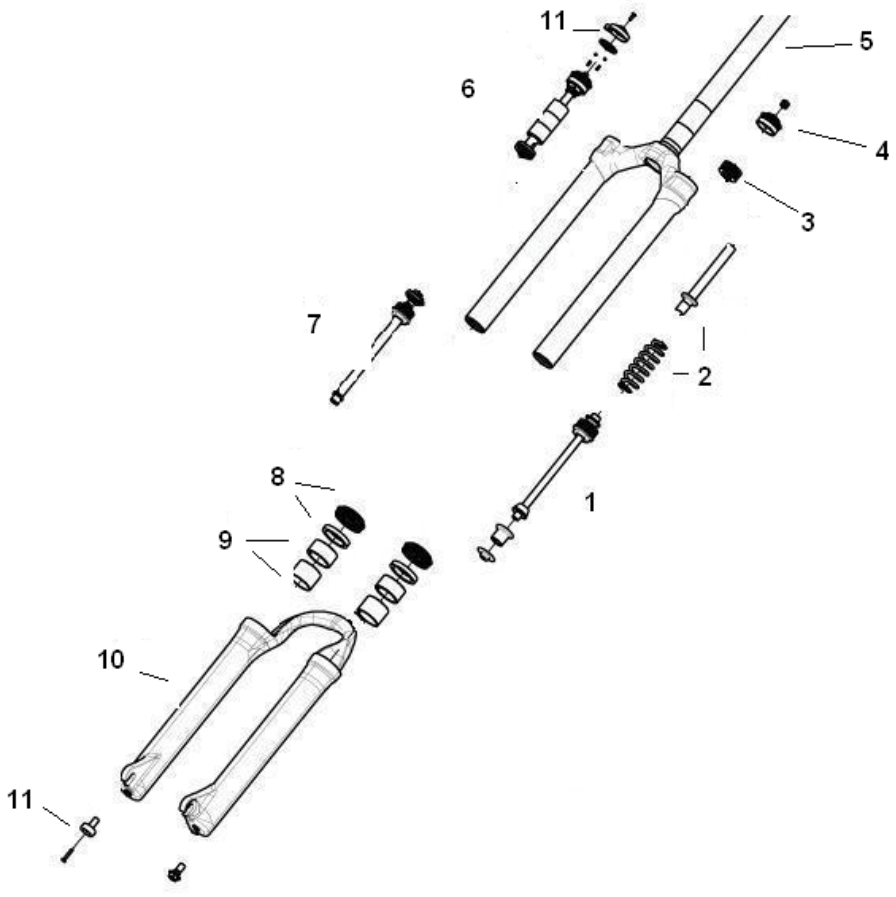
Part Description	Part Number	Kit Group
1. Compression Rod	83-3312	H
2. Ride Kit – Soft - 80	141-25690-K002	G
2. Ride Kit – Medium - 80	141-25690-K003	G
2. Ride Kit – Firm - 80	141-25690-K004	G
2. Ride Kit – X Firm 80	141-25690-K005	G
2. Ride Kit – Medium – 100	141-26743-K001	G
2. Ride Kit – Firm – 100	141-26743-K002	G
2. Ride Kit – X Firm – 100	141-26743-K003	G
2. Ride Kit – Medium – 120	141-26744-K001	G
2. Ride Kit – Firm – 120	141-26744-K002	G
2. Ride Kit – X Firm - 120	141-26744-K003	G
3. Air Piston	141-25698	G
4. Air Cap	83-3150	C
5. Crown/Steer/Leg - 80	83-3299	D
5. Crown/Steer/Leg - 100	83-3330	D
5. Crown/Steer/Leg - 120	83-3331	D
6. Absolute+ Damper	141-26532-K008	A
7. Rebound Damper Assembly	83-3295	B
8. Seal/Wiper Kit 32mm	85-5293	K
9. Bushing Kit	85-5964	E
10. Outer Casting QR – Black	83-3302	E
10. Outer Casting QR – White	141-23994-K031	E
10. Outer Casting TA – Black	83-3303	E
10. Outer Casting TA – White	141-23994-K036	E
11. Knob Kit	141-27177-K001	E