TRUCK

URAL

4320-02

URAL AZ

URAL-4320-02
MOTOR TRUCK
AND ITS MODIFICATIONS

SERVICE MANUAL
(seventh edition, corrected and enlarged)

4320-3902085 РЭ

URALAZ
«URALAZ» PRODUCTION ASSOCIATION

The Manual is intended for use by drivers and automobile workers who operate and service Ural trucks. The manual describes the specification of the trucks, their mechanisms and units with their illustrations, operating requirements, maintenance operations and reference data.

Specifications subject to change without notice.

CONTENTS

FOREWORD

General-purpose Ural-4320-02 truck (Fig. 1), a base model, is intended for carrying cargo, people and for towing trailers on all kinds of roads and any country terrain.

Ural-4320-02 chassis is intended for carrying special equipment.

Ural-43203-02 chassis is intended for carrying van bodies.

Ural-4420-02 bolster truck is intended for pulling special and general-cargo semitrailers on all kinds of roads and terrain (Fig. 2).

Ural-43202-02 truck is a general-purpose carrier (Fig. 3).

Ural-43202-02 chassis is intended for carrying special equipment.

Ural-44202-02 bolster truck in intended for pulling semitrailers on all kinds of roads (Fig. 4).

The trucks and the chassis are available in different outfits depending on modifications and nomenclature of components.

The trucks can be run with trailing systems equipped with pneumatic and electric outlets to GOST 9200—76 (version II), a pneumatic drive of the brake system to GOST 4364—81, brake systems to GOST 22895—77, full mass in accord with the relevant specifications, and with the following couplers: to GOST 2349—75 for trailers, coupling pintle dia. A = 50.8 mm as per GOST 12017—81 with connecting dimensions as per GOST 12105—74 and bolster load of 49 kN (5 tf) to 68.6 kN (7 tf) for semitrailers.

The main models to be run with the trucks are: trailers 7828, 7826 (2ПН-4М), 8350 for the Ural-4320-02 and Ural-43202-02; semitrailers 9355 for the Ural-4420-02; semitrailers 9370 and 935 for the Ural-44202-02.

The «Urals» trucks can be run at ambient air temperatures from minus 45°C (minus 50°C for short periods of time) to plus 50°C.

The «Urals» trucks and chassis also serve as a base for various equipment (tanks, cranes, drilling rigs, vans, etc.).

All claims and suggestions on the operation of the above equipment should be addressed to the relevant Manufacturing Works.

SAFETY RULES AND CAUTIONS

SAFETY RULES

1. Prior to beginning of work, make sure that the truck, its hitching appliances are in good order.

2. When servicing or repairing, put the truck on flat ground, apply the parking brake, shift the first gear in the gearbox, switch off the storage battery, cut off the fuel feed (pull the engine stop control handle till it goes and fix it placing a brace between the handle and the panel).

Before removing a wheel, additionally brake the truck by placing chocks under the wheels, loosen the wheel nuts, then lift up the wheel by a jack or other lifting facility.

For lifting the front axle, fit the jack screw head to spring U bolt socket, while for lifting the rear or intermediate axle, the screw head should be installed under the spring supporting bracket.

3. **For preventing injuries, take care and abide by safety engineering regulations in tyre lifting operations (see section «Servicing of Wheels and Tyres»).**

4. When servicing the diesel engine lock the hood lifting mechanism applying hook *7* (Fig. 5).

5. For climbing the truck bumper, use the step, central and extreme left ribs of the radiator grill, having inserts from the inside (Fig. 6).

6. Clean regularly the engine and starting preheater because fuel and oil leaks may cause fire.

7. Do not warm up the engine indoors if good vents are not available.

8. Antifreezing solutions and brake fluids are toxic, therefore, handle them with due care.

9. Do not disengage the clutch, or shift gears when going upgrade nearly limiting.

10. When operating the winch:

– do not step under the cargo or in close vicinity of a tensioned rope;

— avoid bends or kinks on the rope that may cause damage or break. If stretching the rope across the road, put a guard and set warning signs prohibiting traffic.

11. Before unhitching the bolster truck, the semitrailer support rollers should rest on the ground. Do not attempt to unhitch if clearances have been formed between the rollers and ground.

12. So that the storage batteries do not fall down when serviced on the truck, withdraw them from the container only to the hinged cover of the container, making sure that the cover is fixed reliably in the horizontal position.

13. Never run the truck if spring rings *6* (see Fig. 123) are withdrawn from the locks of the battery container cover.

14. Check the insulation of wires from battery terminal «—» to the starter. Damaged insulation may cause fire.

15. When crossing road-side ditches or rough ground, see that the semitrailer front does not thrust against the parts of the bolster truck because the semitrailer pivot may be forced out of the bolster grips (self-unhitching).

Fig. 1. Ural-4320-02 Motor Truck

Fig. 2. Ural-4420-02 Bolster Truck

Fig. 3. Ural-43202-02 Motor Truck

Fig. 4. Ural-44202-02 Bolster Truck

16. When hitching or unhitching the trailer (semitrailer), put the road train on even flat ground.

17. Before welding on the truck (chassis), remove the fuel tank, disconnect the storage batteries. Connect the welder ground conductor near the welding

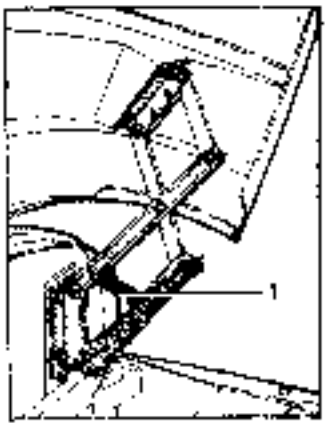

Fig. 5. Hood Lifting Mechanism Lock

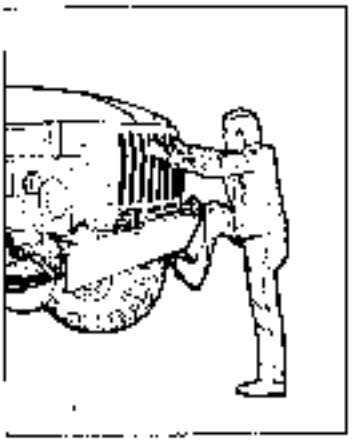

Fig. 6. How to Climb the Bumper Using Step and Radiator Grill Ribs

point cutting off current flow through bearings and friction couples.

18. When carrying passengers in the cab, block the right door lock.

CAUTIONS

Normal operation and long-time service life of the truck may be ensured if you obey all suggestions given in this Manual.

1. When driving the truck during 1000 km initially, abide by the regulations described in Section «Driving a New Truck».

2. Removal of lead-seals (6 pcs) from fuel pump, engine oil sump (1 pc), gearbox cover (1 pc), speedometer drive flexible shaft (2 pcs) and also removal of engine cylinder heads during the guarantee period will cause rejection of Owner's claims whatsoever.

3. For draining the fluid completely out of the engine cooling system, put the truck on flat or forward-inclined ground.

4. Drain the coolant out of the engine cooling system through all the four cocks (see Fig. 54) if the cab heater cock is pulled open and when the plugs are removed off the radiator and out of the preheater filling pipe. When using water in the cooling system for removal of fluid remainder in the preheater fluid pump, start the pump unit and run it during 10 to 15 s.

After draining the fluid, shut off the cocks.

5. See that the preheater fuel pump is adjusted correctly, preventing flame possibly thrown out of the boiler gas duct.

6. Do not operate the preheater for more than 15 s if no water has been filled in the boiler.

7. Do not start up the truck by means of the starter, as this can disable the starter and discharge the storage batteries quickly.

8. Read the engine starting procedure in Section «Peculiar Features of Operation». Do not allow high rpm in a cold engine.

9. The best temperature of the coolant is about 80 to 90 °C. Start driving after the coolant in the engine is heated up to 40 °C, minimum.

10. When the engine runs at full load, do not stop it instantaneously. For equalizing temperatures of separate assembly units, run the engine for 1 to 3 min when the crankshaft rotates at the lowest speed.

11. For guarding the fuel system against air penetration do not burn fuel out of the tank completely.

12. Do not drive continuously when the differential is locked completely in the distributor box. For unlocking the differential, set the lock lever in the forward position.

13. When driving in heavy road condition (sand, mud and the like), see that the brakes are in good repair and adjust in due time the clearances between shoes and drums. If pilot lamp *3* (see Fig. 15) on the instrument board glows, eliminate the trouble in the brake drive hydraulic part or readjust clearances in wheel brakes between shoes and drums.

14. Before moving the truck, check that the air pressure in the brake system is not less than 400 kPa (4 kgf/cm²). If pilot lamps *3, 4* (see Fig. 15) light up on the instrument board on the run or during **braking**, eliminate a fault in the hydraulic or air part of the drive. **Never drive the truck when the pilot lamps glow.**

15. When the ambient air temperature drops below minus 25 °C, the power takeoff may be used only after a short run (approximately 15 km) or after oil in the distributor box is heated otherwise, for example, with hot air.

16. For preventing breakdown of the generator, connect a wire from the starter and a wire from the battery switch to plus and minus terminals of the storage battery, respectively.

17. Connect wires to the generator and voltage regulator in compliance with the marking given for these items.

18. When the engine is started from an external power source via the external start socket, switch on the storage batteries. Never use d. c. sources with characteristics exceeding 24 V at a 0 (zero) A current and 18.3 V at a 1000 A current.

19. Before dismantling the generator from the engine, disconnect the storage batteries.

20. If the starter is pressed repeatedly and if the engine fails or stalls, reset the key in the initial vertical position. Frequent short-time startings of engine cause the quick discharge of the storage batteries.

21. After hoisting the spare wheel fix the tipping bracket by a catch and secure by the guys.

22. When driving out of a rut, do not go for a long time with the steering wheel turned in the extreme position since oil may be overheated in the hydraulic system and the pump may be broken. To the same reason, when taking off power in standstill condition, release the steering control shaft by turning the steering wheel until it turns freely.

23. For avoiding scores on the bearings of gears of the gearbox main shaft, when the truck is towed at long distances (150 km and more) and when the engine does not run, remove the intermediate propeller shaft beforehand. Do not exceed 40 km/h, while towing the truck when the engine does not run and the intermediate propeller shaft is not removed.

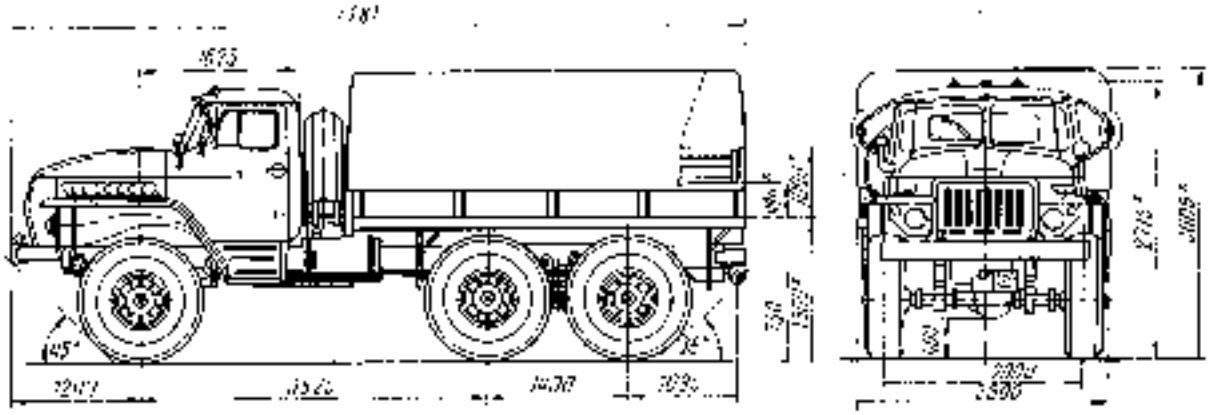

Fig. 7. Overall Dimensions of Ural 4320-02 Truck

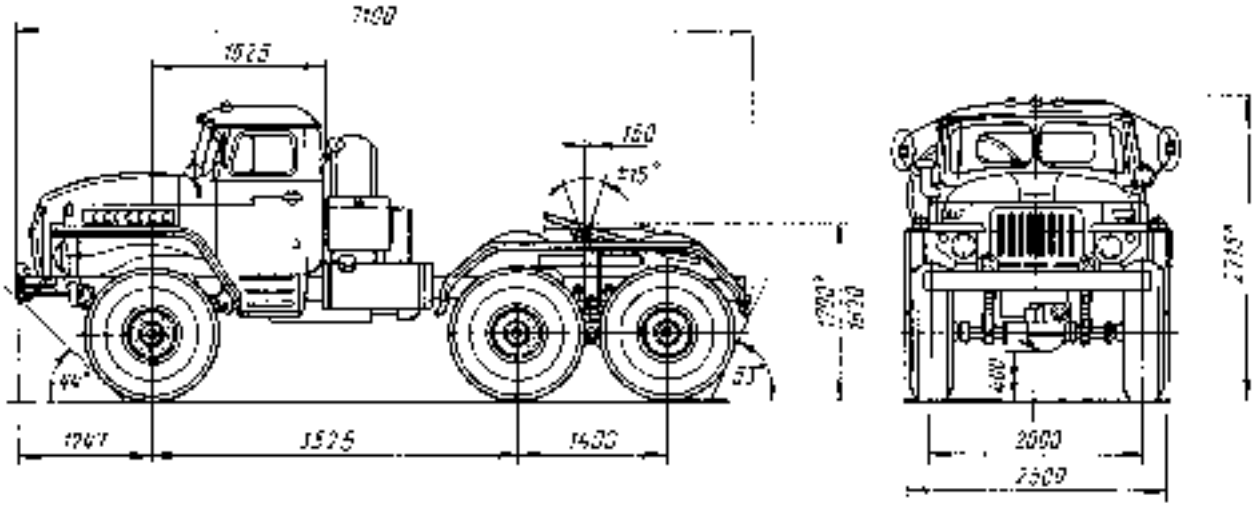

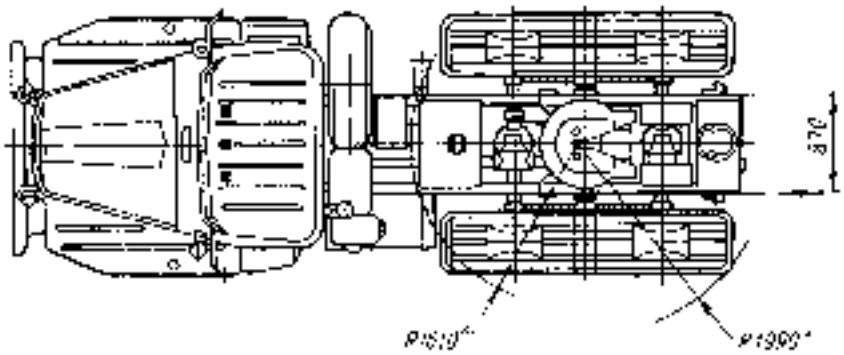

Fig. 8. Overall Dimensions of Ural-4420-02 Bolster Truck

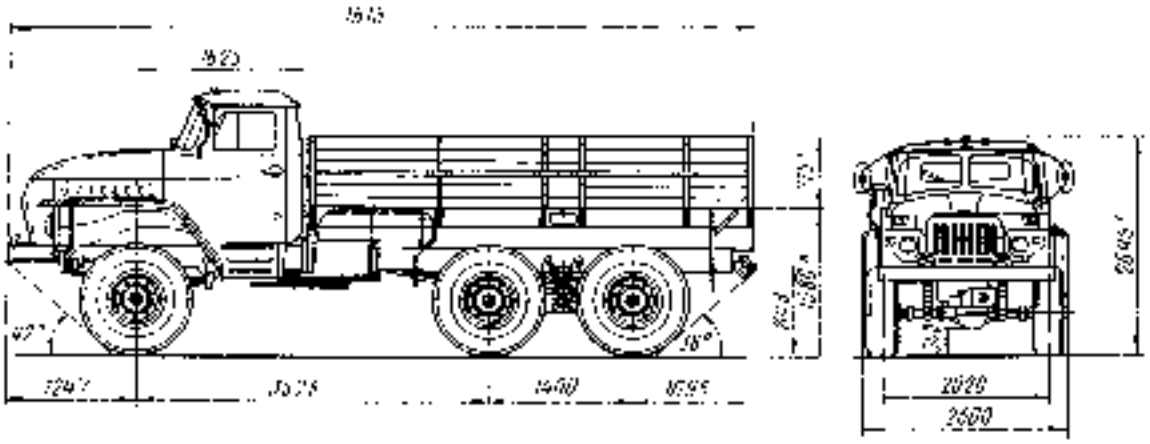

Fig. 9. Overall Dimensions of Ural 43202-02 Motor Truck

24. In the course of the truck run the wheel cocks of the air pressure control system in the tyres should be open. During prolonged stops shut off the wheel cocks. At an ambient air temperature below minus 35 °C open the wheel cocks after initial 15 km of run.

After opening the wheel cocks, blow through the tyre air pressure control system with air from the tyres (see section «Centralized System of Tyre Air Pressure Control»).

25. Do not operate the truck with the tailgate dropped, as in this position it closes the taillights.

26. When a loader of more than 3200 kg total mass should be on the truck bed place guards (boards) under loader's wheels.

27. Place heavy small-size loads, which may cause local sag of the bed floor or damage the sides and the seat's parts, on braces (boards) and secure them reliably. Place the cargo in such a way that its centre of mass is in the middle of the bed.

Overall dimensions of the trucks are shown in Figs 7—11. Dimensions marked with an asterisk refer to a fully equipped truck, those with two asterisks denote a minimum permissible distance of body parts to the cab or the upper flange of the side member in the wheel zone. Road clearance, rear and front angles and the height of the bolster coupling refer to the trucks of total mass.

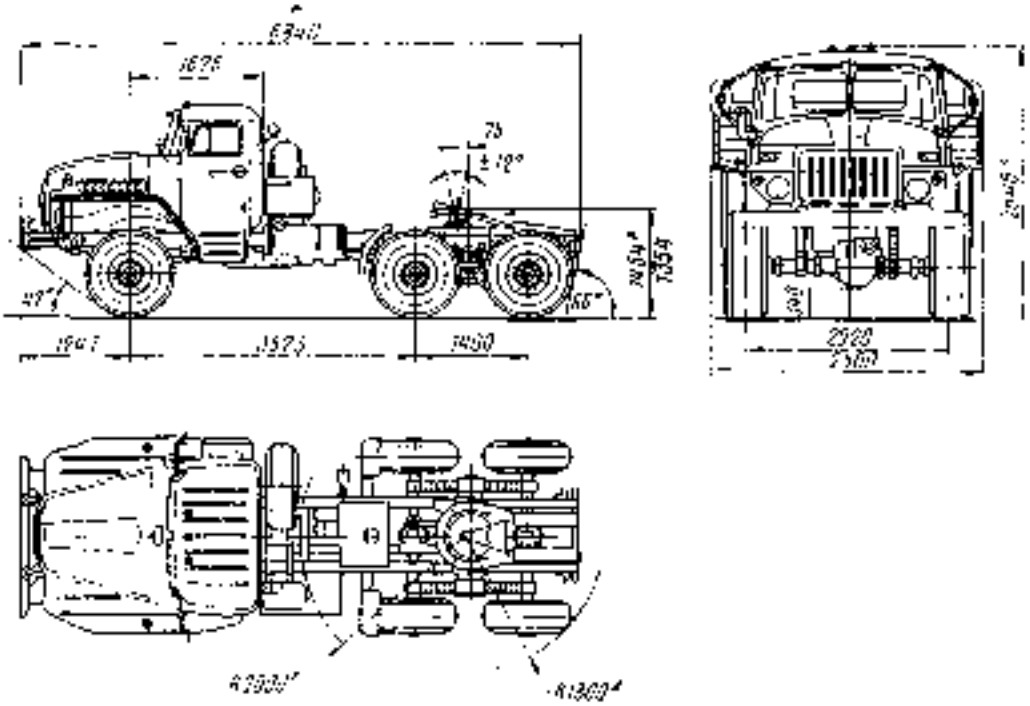

Fig. 10. Overall Dimensions of Ural-44202-02 Bolster Truck

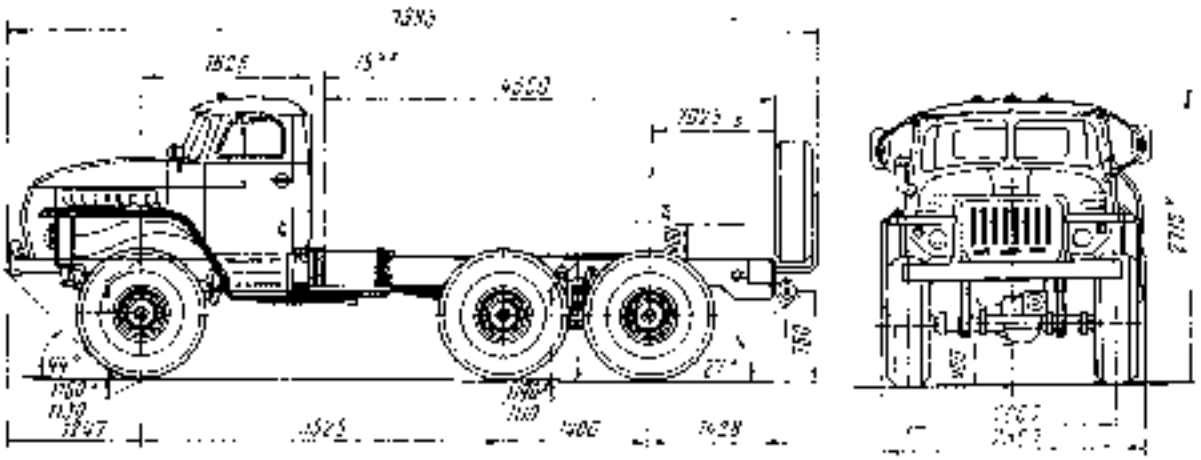

Fig. 11. Overall Dimensions of Ural-43203-02 Truck Chassis

The truck marking is given on a name plate in the cab of the right-hand side. It indicates: manufacturer's name and trade mark, identification No. and engine model.

SPECIFICATIONS

Description	Ural-4320-02	Ural-4320-02	Ural-4320-02	Ural-4320-02
General				
Payload, kg	5000	7000/5000 *	—	—
Semi-trailer mass on truck holster, kg	—	—	5500	7500/3500 *
Allowable total mass of towed trailer or semi-trailer, kg	7000 */11500	11500/7000 *	15200/12500 *	18500/12500 *
Mass of fully equipped truck, kg	8445 **	8120	7765	7465
Truck total mass, kg	13745 **	15175/13175*	—	—
Distribution of truck (road train) total mass on road, kgf				
through front wheels tyres	4270 **	4345	4440	4325
through bogie wheels tyres	9475 **	10830	9125	10865
Maximum travelling speed in upshift, km/h:				
truck total mass	80	80	—	—
road train total mass	—	—	72	72
Estimated fuel consumption *** at 60 km/h for 100 km of trip, lit, maximum:				
single truck	29	34.5	—	—
road train	—	—	48.0	48
Fuel distance regarding estimated fuel consumption, km:				
single truck	993	595	—	—
road train	—	—	717	717
Braking distance at 40 km/h, m, maximum:				
truck total mass	15		—	—
road train total mass	—		18.4	
Maximum upgrade angle, %, minimum				
truck total mass	60 (31°)	50 (27°)	—	—
road train total mass	34 (19°)	27 (15°)	27 (15°)	
Minimum turning radius on track axis of front outer (relative to turn centre) wheel, m, maximum	10.8			
Obstacles cleared, m:				
ditch width	0.6			
vertical wall	0.55			
hard bottom ford	1.7	0.7	1.7	0.7
Engine				
Model, type	KamAZ-740.10 oil third cullic, diesel, four-stroke, with compression ignition, eight-cylinder, V-type, 90° inclined angle			
Cylinder bore and piston stroke, mm	120×120			
Cylinder displacement, lit	10.85			
Compression ratio	17.0			
Rated output, gross, kW (h.p.)	154 (210)			
Maximum torque, N·m (kgf·m), gross	667 (68)			
Speed, min^{-1}:				
at rated output	2600±50			
at maximum torque	1600—1800			
at idling, minimum	600±50			
at idling, maximum	2930^{+30}_{-30}			
Minimum specific fuel consumption, g/kW·h (g/h·p·h)	211 (155)			
Firing order, 1—5—4—2—6—3—7—8	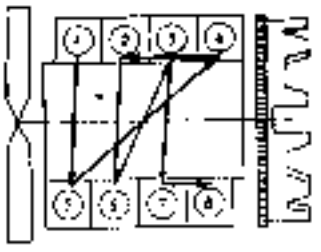			
Crankshaft sense of rotation to GOST 22836—77	right-hand			
Lubrication system	Mixed under pressure and by splashing			
Oil pressure in heated engine, kPa (kgf/cm²) at crankshaft speed:				
2600 min^{-1}	400—550 (4.0—5.5)			
600 min^{-1}	100 (1.0), minimum			

* If used on bumpy earthen road with some heavy sections, and for Ural-4320-02 truck — roadless country.

** For Ural 4320-02 with winch.

*** Estimated fuel consumption serves to determine a truck technical condition and is not considered as a norm during operation.

Description	Ural-4320-02	Ural-4320-02	Ural-4320-02	Ural-4320-22
Fuel system	Separated type			
Fuel feed	V type, 33-02 high pressure with all-duty speed regulator and advanced fuel injection coupling			
High-pressure pump (HPFP)	Piston-type, with drive from HPFP shaft cam, with hand feed pump			
Injectors	Enclosed-type, needle initial lift pressure 21.22—22.7 MPa (220—227 kgf/cm²), sprayers — nozzled 33			
Fuel filters	Coarse and fine			
Air filter	Dry-type, two stage			
Cold engine starting system	Glow-plug preheater and ПЖД-30А starting preheater of 30 kW 126,000 kcal/hr heat generation capacity			
Gas exhaust system	Two intake pipes and muffler with two inlet branches			
Cooling system	Fluid-type, enclosed, with forced circulation, with expansion tank			
Radiator	Tubular-plate type, having shutters controlled from cab			
Water pump	Centrifugal-type, with V-belt drive			
Fan	Five-blade type, driven from hydraulic coupling			
Transmission				
Clutch	Model KamAZ-14, two-disk dry friction type, mechanically driven with no booster			
Gearbox	Model KamAZ-141, mechanical, three-way, five-speed type, with synchromesh units in second, third, fourth and fifth gears			
Transmission ratios	First gear — 5.42, second — 2.89, third — 1.64, fourth — 1.0, fifth — 0.721, reverse — 5.30			
Distributor box	Mechanical, two-stage type, with interaxle cylindrical locked differential distributing torque between front axle and rear axle bogie in ratio 1:2			
Transmission ratios	Upshift — 1.5, downshift — 2.15			
Propeller shaft	Open-type, four shafts with joints on needle bearings			
Axles	Driving, axle case combined of cast middle section and half-axle housing press-fitted in it. Front axle is of controlled type, with disk-type equal angular velocity joints			
Final drive	Double drive, spiral-tooth bevel gear couple and helical-tooth spur gear couple. Final drives of all truck axles are interchangeable			
Transmission ratios	7.32	8.90	7.32	
Differential	Symmetrical, bevel-type, with four satellites			
Half-axles	Fully unloaded			
Running gear				
Frame	Stamped, riveted structure			
Towing arrangement	At front — rigid towing hooks, in rear — towing unit with two-side shock absorber		On bolster truck — rigid towing hooks at front and in rear; rigid towing hooks and bolster unit	
Truck suspension	Two half-elliptic springs with hydraulic two-way shock absorbers			
front	Fully articulated, on two half-elliptic springs. Push efforts transmitted by torque rods			
rear				
Wheels	254Г-508	340-533	254Г-508	340-533
Spare wheel holder position	Vertical	Horizontal	Vertical	Vertical
Tyres	Model O11-25 sized 370-508 (14.00—20) with controllable pressure	Model O-17A sized 1100×400-533, wide shape constant-pressure type	Model O11-25 sized 370-508 (14.00—20) with controllable pressure	Model O-47A sized 1100×400-533, wide shape constant pressure type
Air pressure in tyres, kPa (kgf/cm²)	390-50 (3.9—0.5) depending on operating conditions	Front axle — 250 (2.5), rear bogie — 350 (3.5)	320-50 (3.2—0.5) depending on operating conditions	Front axle 250 (2.5), rear bogie — 350 (3.5)
Steering system				
Drive type	Mechanical with hydraulic booster			
Steering gear	Two-thread worm and side toothed segment. Gear ratio 21.5			
Booster	Hydraulic-type, two-way action, with control slide-type valve			
Booster pump	Blade, two-way, rotor type, driven through gears from engine crankshaft			
Brake systems				
Service brake system	Two-conduit, with air over hydraulic drive. Wheel braking mechanisms — of drum type			
Stand by brake system	One of wheel brake system conduits			
Parking brake system	Mechanical, interlocked with trailer brake control valve. Braking mechanism — of drum type. Mounted on distributor box output shaft			
Auxiliary brake system	Compression-type, mounted in gas exhaust system			
	Air operated drive, interlocked with fuel feed cut-off			
Electrical equipment system				
Wiring system	Single-wire, negative terminals of circuit source are connected with truck frame. Rated voltage 24 V			
Generator	Type Г-288Б, of waterproof design, are rated at 1000 W (112.3702, se			
Voltage regulator	Microreducator type, contactless, with two adjustment levels			

Description	Ural-4320-02	Ural-4320-02	Ural-4320-02	Ural-4320-02
Storage batteries	Two items, 6СТ-190ТР or 6СТ-190ТРП			
Storage battery switch	5КВ-016, with distance control from cab			
Starter	СТ 142 Б, rated at 8.2 kW (11.2 h.p.), with electromagnetic traction relay and distance control			
Headlamps	Two items, 401.3711 with sealed optical element	Two items, Ф7122-БВ1	Two items, 10.3711 with sealed optical element	Two items, Ф7122-БВ1
Front lights (two-section with two-colour diffuser side lamps and direction indicators)	Two items, 11Ф133-АБ, sealed	Two items, 11Ф130-Б	Two items, 11Ф133-АБ, sealed	Two items, 11Ф130-Б
Rear lights (three-sectional, with side lamps, direction indicators, brake signalling lamps)	Two, Ф11133-АБ, sealed	Two, Ф11132-Б	Two, Ф11133-АБ, sealed	Two, Ф11132-Б
Cab and bed				
Cab	Three-seater, metal-made, unfitted with heater			
Bed	Metal-made, with hinged tailgate, having removable metal seat, hinged side seats, extension sides, removable canopy and two rows	Wood-made, with three hinged boards and extension sides *	—	—
Quantity of seats for carrying passengers	27	—		
Bed internal dimensions, mm				
length	3890	4600		
width	2330	2320	—	—
height with main sides	491	715	—	—
height with extension sides	1050	1430	—	—
Bolster arrangement	—	—	With two degrees of freedom. Bolt locking grips are closed with half-automatic lock. Bolt hole diameter — 50.8 mm	
Special equipment				
Auxiliary power takeoff *	Mechanical, engaged via sliding coupling from distributor box primary shaft. Ensuring up to 40% takeoff of engine maximum output. Power take-off is allowed on the run with appropriate towing-dynamic efficiency			
Power take-off from gearbox *	Mechanical, one-step. Gear ratio with gearbox — 1.46. Sense of rotation at output flange side, left-hand. Power taken off, not exceeding 26 kW (35.3 h.p.). Power takeoff during truck travel is not tolerated			
Winch *	Drum-type, with worm reduction gear unit and hand brake driven via propeller shaft from auxiliary power takeoff. Rope working length 60 m, rope cross-section 17.5 mm. Rope reversing is possible. Maximum traction effort — 70 kN (7 tf)	—	—	—
Winch pulley *	Rope, single groove	—	—	—
Tyre pressure adjusting system	Adjusts and controls air pressure in tyres by valve in driver's cab	—	Adjusts and controls air pressure in tyres by valve in driver's cab	
Units sealing system	System of outlet pipes connecting units with atmosphere	Valve breathers are used	System of outlet pipes connecting units with atmosphere	Valve breathers are used
Folding valve *	Damper installed in exhaust pipe of gas outlet system	—	Damper installed in exhaust pipe of gas exhaust system	—

* Optional as required

An engine Serial No. is stamped on a name plate fixed atop the cylinder block front part.

Appendices 1—9 give reference data needed in servicing the trucks, Appendix 10 gives some additional features of truck design.

CONTROLS AND INSTRUMENTS

Controls and instruments available inside the truck cab are illustrated in Figs 12 to 15

Engage the gearbox, distributor box and differential lock, also the auxiliary power takeoff in compliance with the instruction plates available inside the cab (Fig. 12), and according to the Section «Driving Technique»

The auxiliary power takeoff is guarded against self-shifting due to a retainer that locks the lever in the neutral position

As button *22* (Fig. 13) is pressed, the auxiliary brake is actuated: when the foot is taken off the button, the braking action is interrupted. If parking brake lever *2* is shifted up, the truck becomes braked, and the trailer brake system is applied. If need be, the parking brake may be applied, when the truck goes, or it may be operated together with the wheel brakes.

Handle *4* controls atmospheric air supply. If lever *12* is set in the upper position, air is supplied through deflectors for blowing over safety glasses, in the lower position — for warming feet of the driver and passengers. If lever *13* is set in the upper position, the internal hatch is opened, and in the lower position, it is closed.

For shutting down the engine, pull handle *15* till it goes.

When switch *8* handle is turned clockwise, right-turn indicators light up, if turned counter-clockwise — left-turn indicators glow.

When switch *24* button is pressed, the headlamps are changed over (distance headlamps to dimming one and reverse).

If the truck is outfitted with a tyre centralized inflation system, the cab has a relevant instruction plate giving the tyre pressure and travel speed depending on the kind of road.

The tyre pressure valve control lever may be set in three positions:

— left-hand — for inflating the tyres;

— middle — neutral, pressure gauge *11* (Fig. 14) indicates the actual air pressure in tyres;

— right-hand — for bleeding air out of tyres.

The radiator shutter is controlled via chain *6* (see Fig. 13). For lifting the shutter, pull the chain

For connecting or disconnecting the truck storage batteries, depress button *23* (see Fig. 14) on the instrument board.

The engine starting preheater is controlled from the panel mounted under the hood on the radiator left-hand side. When the button of alarm signalling switch *17* is pressed, all direction indicators are turned for flashing, and the button check lamp glows

When knob *19* is pulled, the engine crankshaft rotates at constant speed, and the knob is fixed when turned through 90°. Engine speed is checked through tachometer *5*. If the latter gives no reading, switch on any load (heater, instrument lighting, etc.), the tachometer will begin to show the crankshaft speed

The electrical system is checked through ammeter *8*. Position of the pointer between marks «0» and «—» indicates storage battery discharge, that between «0» and «+» — charging. Air brake system pressure is checked through two-pointer pressure gauge *1*; to check air pressure, each pneumatic circuit has an outlet valve to connect a portable pressure gauge.

Starter and instrument switch *22* key may be set in three positions:

0 — vertical — the instruments and starter are off, the key may be taken out;

I — middle (the key is turned right to the first locked position) — the instruments are on;

II — extreme right-hand (the key is turned right till stop) — for energizing the instruments and starter.

When switch *22* is on, oil pressure alarm drop lamp *2* glows (red colour). After the engine is started, when the crankshaft gains speed above the lowest value, the lamp goes out.

Illumination of the dial may be adjusted by turning the switch *24* knob.

The windshield wiper is switched on by turning switch *21* knob counter-clockwise. When the knob is turned further counter-clockwise, the brushes are so stimulated.

The glow-plug preheater operates if button *16* is held depressed continuously. When pilot lamp *8* (Fig. 15) lights, that indicates that the glow-plug preheater becomes ready for starting the engine.

When buttons *6, 7* are depressed, all the intact pilot lamps of the left- or right-hand unit glow. Pilot lamp *9* shows flickering green-colour light after the truck right- or left-turn indicator has been switched on, also intended for checking the truck indicator lamps.

If the air pressure drops in reservoirs below 450 kPa (4.5 kgf/cm²), lamp *4* glows with red-colour light and the warning signal is heard.

If clearances between brake shoes and drums are widened, and also if the drive hydraulic part fails, when the brake pedal is depressed lamp *3* glows with red-colour light and goes out after the fault is remedied.

If resistance in the oil filter rises (clogging of the filtering element, solidifying of oil at lower temperature), lamp *5* glows with red light. Check that the lamp lights only when the engine is started or warmed.

Coolant temperature alarm — pilot lamp *2* glows with red-colour light, if the temperature rises above 98 °C. It is allowed to run the engine for a short time (during about two hours) at a temperature of up to 105 °C.

The actuation of the parking brake switches on red-colour pilot lamp *1*.

Fuel level indicator *10* (see Fig. 14) shows the value of fuel level in the main fuel tank. Fuel reserve indicator *9* which is built into the dial of indicator *10*, and glows when the fuel volume diminishes to 60 ltr.

Oil cooler valve (Fig. 16) is mounted on the centrifugal oil filter casing.

Fan drive hydraulic coupling switch is mounted in the engine front on the branch pipe through which

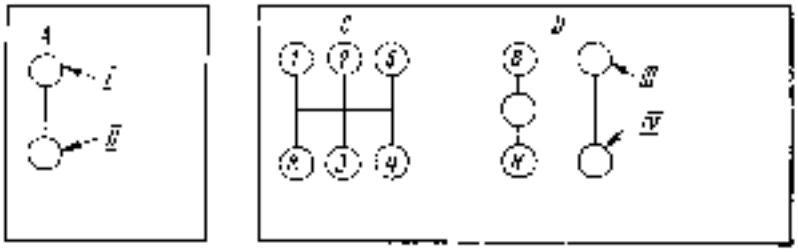

Fig. 12. Instruction Plates Attached Inside the Truck Cab:

A — winch; I — on, II — off; C — gearbox; 1, 2, 3, 4, 5 — gears; 6 — reverse gear; D — distribution box; 8 — switch; 9 — crankshaft; 10 — crankshaft; III — differential unlocked; IV — differential locked.

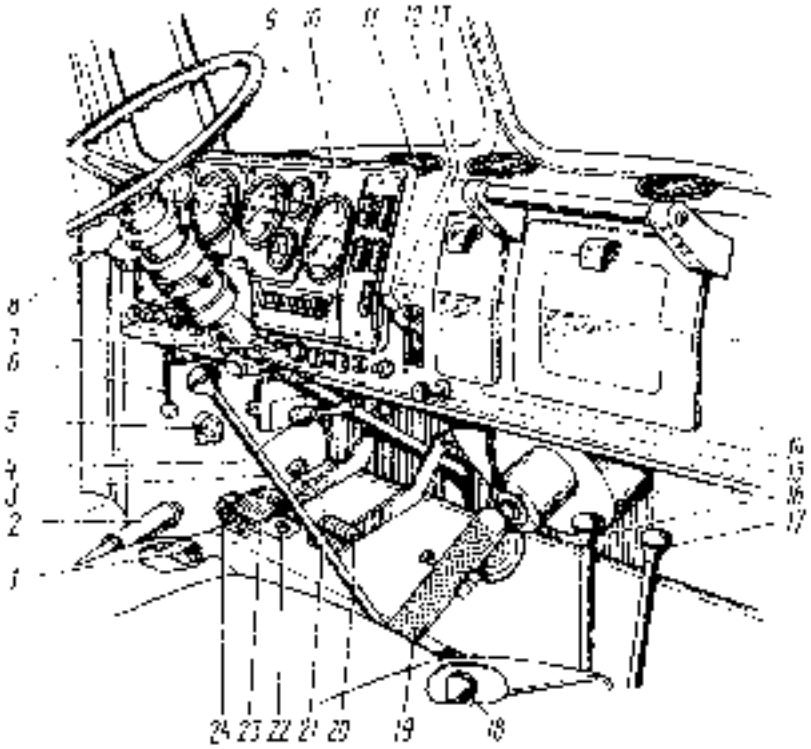

Fig. 13. Controls and Instruments:

1 — [illegible] lever switch; 2 — parking brake lever; 3 — gear shift lever; 4 — [illegible]; 5 — portable lamp socket; 6 — radiator shutter control chain; 7 — pressure control valve handle; 8 — turn indicator switch; 9 — steering wheel; 10 — instrument board; 11 — [illegible]; 12 — heating [illegible]; 13 — distributor [illegible]; 14 — [illegible] control lever; 15 — [illegible] lever; 16 — [illegible] pull hatch cover; 17 — engine stop hand control handle; 18 — distributor box shift lever; 19 — distributor box differential lock lever; 20 — power take-off engagement lever; 21 — foot control pedal; 22 — brake pedal; 23 — [illegible]; 24 — washer pump button; 25 — auxiliary brake air control valve button; 26 — clutch pedal; 27 — headlamp foot switch.

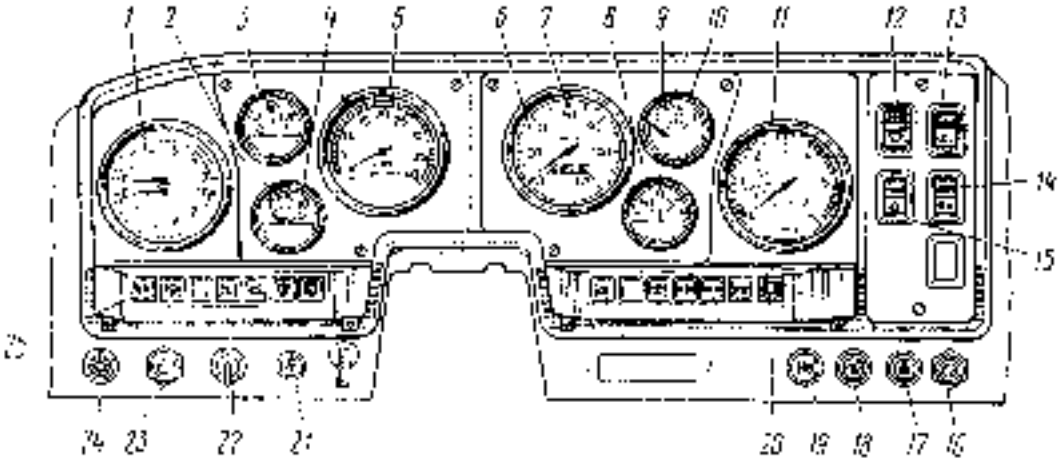

Fig. 14. Instrument Board:

1 — [illegible] pointer pressure gauge; 2 — oil pressure alarm stop lamp; 3 — coolant temperature indicator; 4 — oil pressure indicator; 5 — tachometer; 6 — speedometer; 7 — headlamp upper beam pilot lamp; 8 — ammeter; 9 — fuel reserve indicator; 10 — fuel level indicator; 11 — tyre pressure gauge; 12 — cab dome lamp switch; 13 — spotlight switch; 14 — cab heater switch; 15 — trailer lamp sign illuminating switch; 16 — glow-plug preheater series button; 17 — alarm signalling switch; 18 — high beam switch; 19 — left-foot hand control knob; 20, 21 — right- and left-hand pilot lamp assemblies; 22 — windscreen wiper switch; 23 — starter and instruments switch; 24 — storage battery switch button; 25 — instruments illumination rheostat-type switch.

Fig. 15. Pilot Lamp Assemblies:

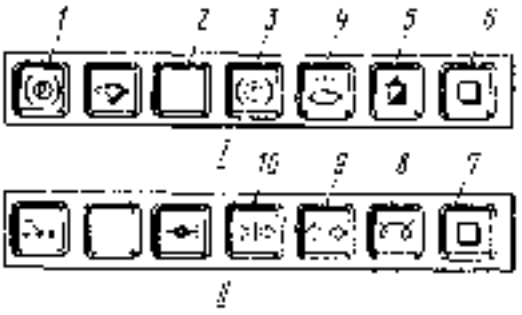

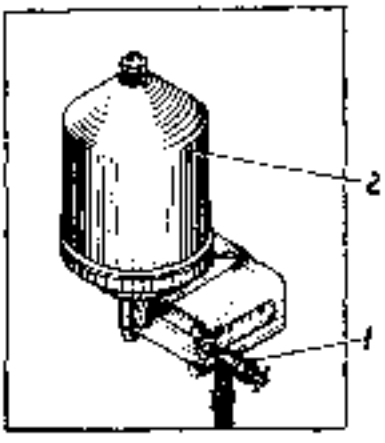

Fig. 16. Oil Cooler Valve:

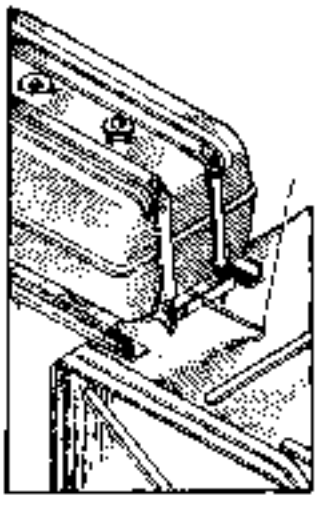

Fig. 17. Auxiliary Fuel Tank.

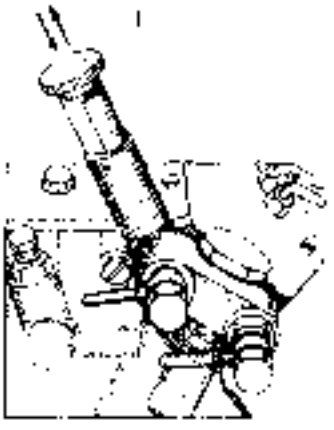

Fig. 18. Hand Fuel-Feed Pump.

Fig. 19. Shut-off Valve and Coupling Head

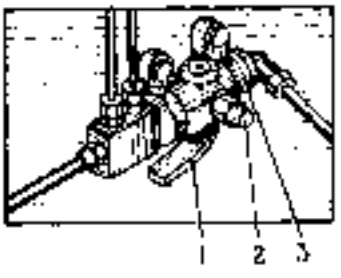

Fig. 20. Air Take-off Valve

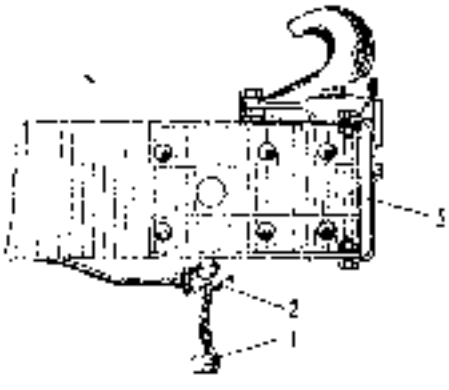

Fig. 21. Towing Valve:

Fig. 22. Winch Control Levers:

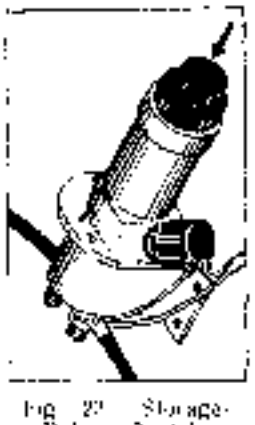

Fig. 23. Storage-Battery Switch

coolant is supplied to the right-hand half-block. Control of the hydraulic coupling switch is described in Section «Cooling System».

Auxiliary fuel tank cock. For using fuel contained in the auxiliary tank, transfer it into the main fuel tank after opening the cock by the cock control handle (Fig. 17).

Hand fuel feed pump is mounted on the low-pressure fuel feed pump casing. For feeding the fuel to the high-pressure pump, if the engine does not run, slightly press down handle *1* (Fig. 18), turn counterclockwise to free it from fixed position and reciprocate it up and down. Upon transfer of fuel, depress the handle and fix it by turning fully clockwise.

Shut-off valves are used for shutting off the air pipes leading to the trailer. Valve *1* (Fig. 19) is open when its handle is along the valve body, and closed, when it is across it.

Coupling head *2* is used for connecting the truck air system with that of the trailer or semitrailer.

Air take-off valve is mounted under the hood on the cab front panel. For taking off, turn out plug *2* (Fig. 20), connect the hose end (available in the set of tools) and turn handle *1* crosswise on valve body *3*.

Towing valve (Fig. 21), mounted on the front buffer right-hand bracket, is used for feeding air to the truck brake system in towing, when its engine is out of order.

To connect truck tractor to the truck air pipes unscrew plug *1* of towing valve and connect air hose with coupling head available in the driver's tools kit.

Winch control levers are shown in Fig. 22. Use of the winch is described in Section «Winch».

Storage-battery switch (Fig. 23) is mounted on the battery container bracket. If the distance control system fails, the switch may be turned on or off by pressing upon the button under the rubber-made cover.

External start socket is provided on the engine. Using the plug delivered with each truck, it is possible to start the engine from a d. c. external source.

DESIGN, OPERATION, ADJUSTMENT AND SERVICING OF TRUCK COMPONENTS AND UNITS

ENGINE

The truck utilizes engine model KamAZ-740.10. Engine elevation and cross sections are shown in Figs 24 and 25.

Cylinder Block, Cylinder Heads and Crank Mechanism

Cylinder block is an iron casting having wet liners, cylinders in the left-hand row are displaced at 29.5 mm forward relative to the right hand row. Water jackets formed inbetween the liner and the block is packed with rubber rings. At the top the ring is clamped under the shoulder in a liner groove, at the bottom, two rings are fitted in a block groove. The block is bored in assembly with main bearing caps; therefore, they are not interchangeable and are mounted in precisely fixed position. The crankcase section is coupled with main bearing caps by means of transverse tie bolts. Collars provided in the block front cover and flywheel housing are used for sealing the crankshaft front and rear ends.

The flywheel housing upper section is used as a cover for distributor shaft gears and auxiliary drives.

Cylinder heads (Fig. 26) are aluminium-alloy castings, intended individually for each cylinder and having valve fit-in seats and guides; the heads have water jackets that communicate the blocks jacket. Coolant and oil by-pass holes arranged between the head and block and also the head on the outline are all sealed with moulded rubber rings *15* (see Fig. 25) and gasket *14*. Relative to the block, the head is fixed by two pins and secured thereon with four bolts. Steelmade sealing ring *10* (see Fig. 26) is press-fitted in a bore provided on the head lower face.

Valve mechanisms and injectors are arranged in the cylinder heads.

The cylinder head may be dismantled only for repairing parts of the piston and connecting rod group, gaskets, valves or for replacing the head proper. Removal of the cylinder heads during the guarantee period is not permissible without the manufacturer's approval.

Before fitting the head, wipe clean the block and head mating surfaces and check that the gasket is placed properly.

Cylinder head fastening bolts should be tightened on the cooled engine in three attempts in the sequence of consecutive numbers as shown in Fig. 27. Tightening torque, N·m (kgf·m): attempt I — 40 - 50 (4—5); attempt II — 100—130 (10 - 13); attempt III - 160—180 (16—18). Before screwing in, coat the bolt thread with graphite lubricant. After tightening the bolts, check and readjust, if need be, the clearances between the valves and rockers.

Crankshaft is steel, hardened by h. f. current or nitriding having five main journals and four connecting-rod crankpins. The connecting-rod crankpins have internal chambers in which the oil is cleaned additionally, so the connecting rod liners are guarded against solid particles and soil.

Crankshaft cheeks, front and rear ends mount counterweights: on cheeks, integrally with the crankshaft, on front and rear ends, they are press-fitted in assembly.

The crankshaft front end mounts a gear used for driving the oil pump; and the crankshaft rear end mounts a timing gear with an oil deflector.

The shaft is locked against axial displacement with four steel-aluminium half-rings fitted in the recess of the rear main bearing so that the grooved side fits the shaft thrust ends.

Main and connecting-rod bearings of the crankshaft are of replaceable design, thin-walled, three-layer bearings having working layers of leaded bronze. The main bearing upper and lower liners are of non-interchangeable design. The main bearing upper liners have drill holes used for feeding oil and grooves for dispensing. The connecting-rod bearing upper and lower liners are made interchangeable.

Flywheel is a cast iron piece mounted on the crankshaft rear end. For adjusting the engine a slot

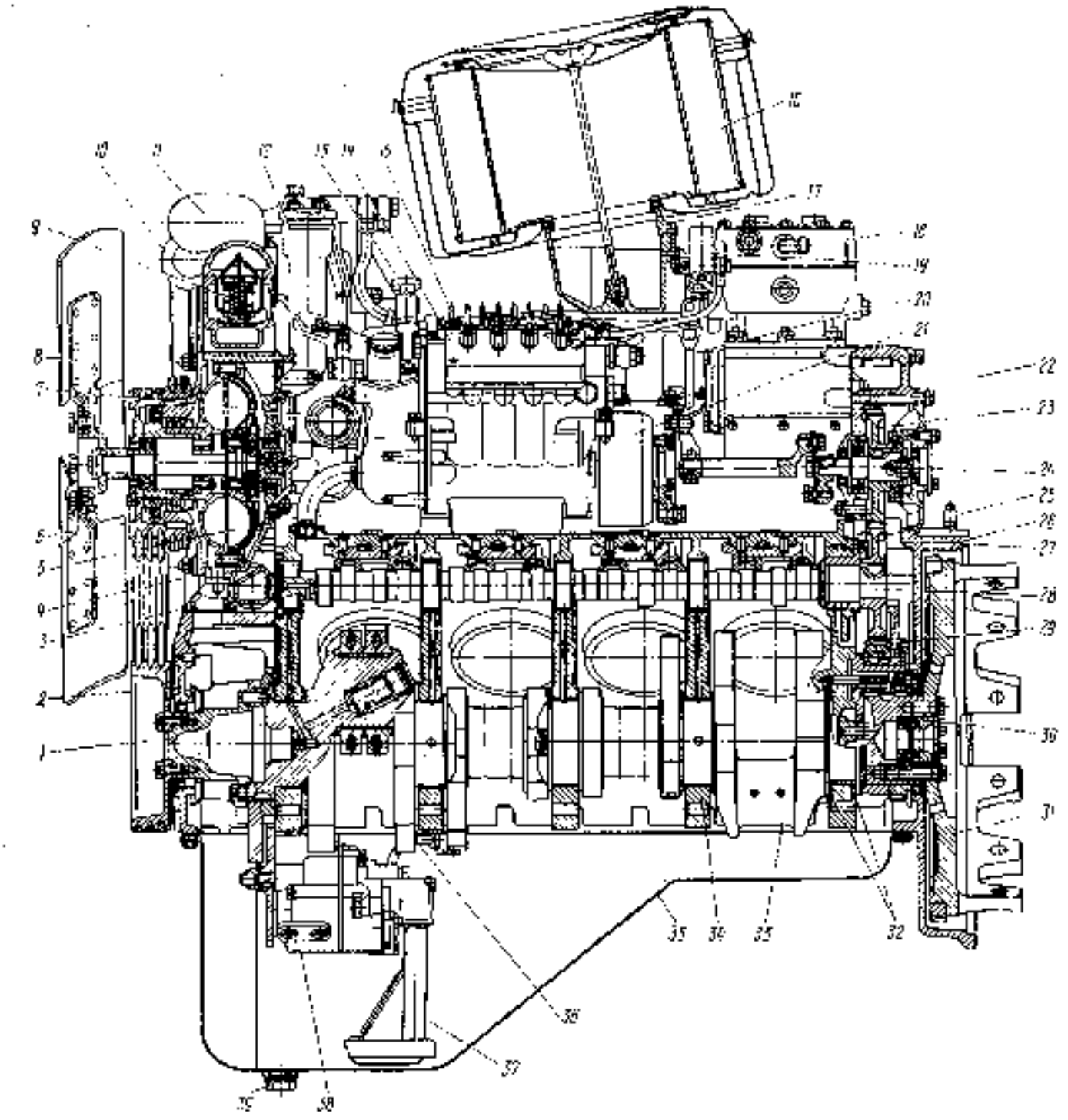

Fig. 24. Engine Elevation

1 — power take-off flange; 2 — block front cover; 3 — drain branch flange; 4 — fan drive hydraulic coupling; 5 — [illegible]; 6 — hydraulic governing [illegible]; 7 — water connecting pipe; 8 — fan; 9 — thermostat; 10 — ring belt; 11 — water jacket branch; 12 — [illegible] lifting hook; 13 — hand fuel feed pump; 14 — high pressure fuel pump; 15 — high-pressure fuel line; 16 — air cleaner; 17 — intake manifold; 18 — connecting branch; 19 — compressor; 20 — governing [illegible]; 21 — preheater solenoid valve; 22 — compressor water feed pipe; 23 — fuel vapor fuel injector [illegible]; 24 — bearing [illegible]; 25 — HPFP driven gear; 26 — HPFP drive; 27 — flywheel hub; 28 — flywheel housing; 29 — cylinder block; 30 — camshaft; 31 — camshaft driving gear; 32 — [illegible] primary shaft ball bearing; 33 — [illegible]; 34 — thrust washer; 35 — [illegible]; 36 — bearing insert; 37 — oil crankcase; 38 — oil pump valve intake tube; 39 — suction pipe; 40 — oil pump; 41 — drain plug

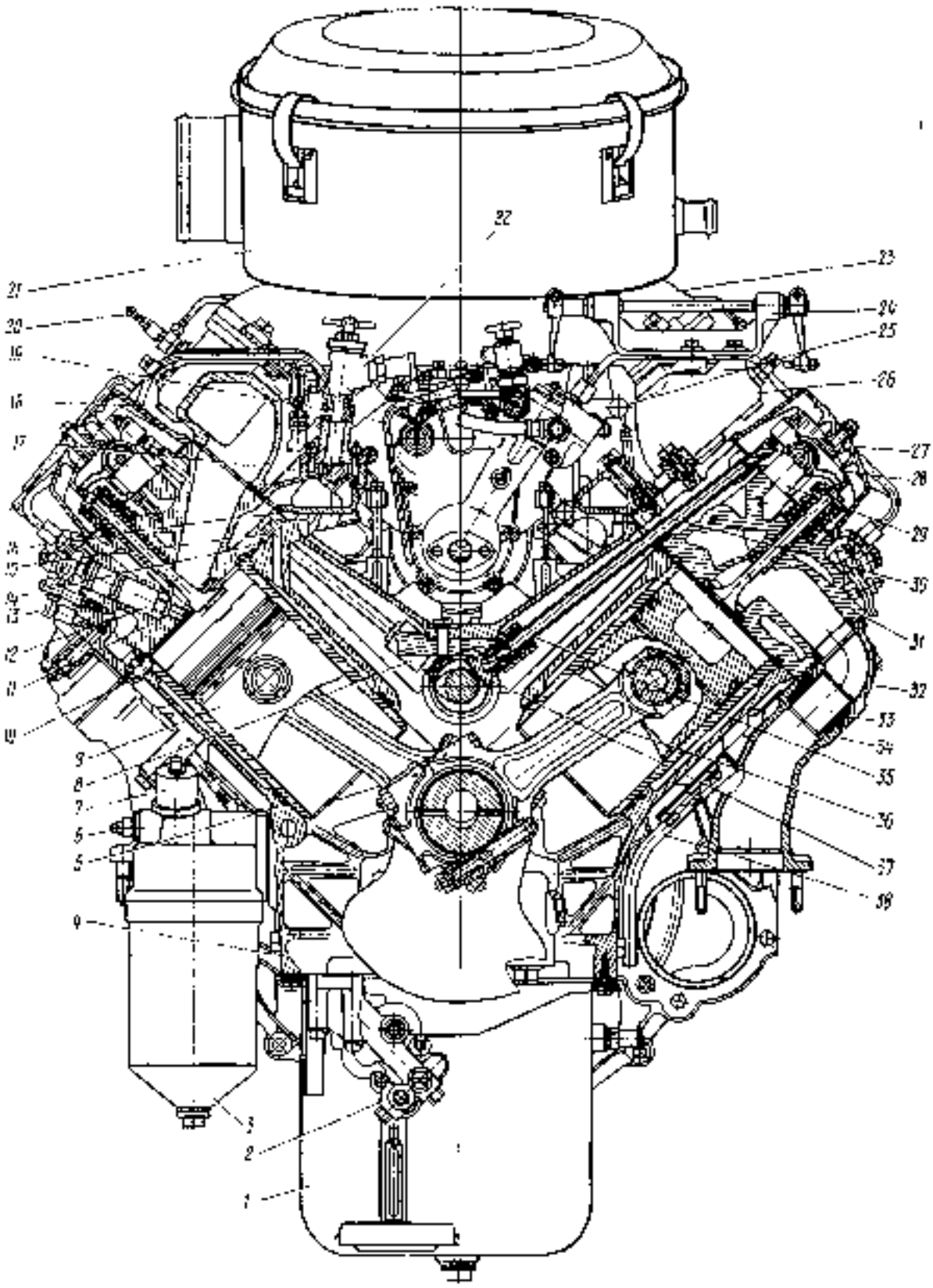

Fig. 25. Engine Cross Section:

[illegible] crankcase; 2 — oil pump; 3 — full-flow oil filter; 4 — cylinder block; 5, 10 — packing rings; 6 — oil pressure alarm drop switch; 7 — oil filter clogging warning; 8 — layout gauge; 9 — piston; 11 — worm; 12 — injector; 13 — injector fastening clips; 14 — gasket; 15 — corrugated rubber ring; 16, 30 — right- and left-hand water pipes; 17 — compressor water feed tube; 18, 28 — right- and left-hand intake manifolds; 19 — HMEP oil feed pipe; 20 — glow plug preheater torch plug; 21 — air cleaner; 22 — cab heater [illegible]; 23 — intake manifold connecting branch; 24 — governor control drive bracket; 25 — booster mechanism low pressure pump pipe; 27 — cylinder head cover; 29 — valve rocker; 31 — rocker lock; 32 — cylinder head; 33 — outlet manifold [illegible]; 34 — connecting bush; 35 — outlet manifold; 36 — tappet rod; 37 — connecting rod; 37 — tappet; 38 — drain pipe

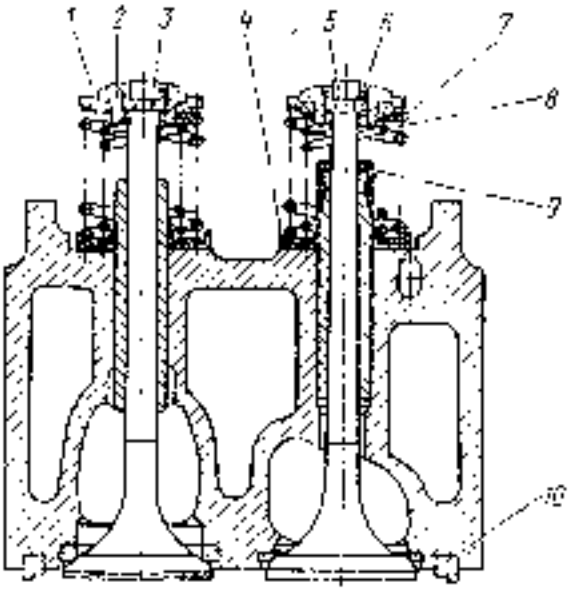

Fig. 26. Cylinder Head:
1 — Spring plate; 2 — Bolt; 3 — outlet valve; 4 — [illegible]; 5 — Inlet valve; 6 — slide stick; 7, 8 — springs; 9 — [illegible]; 10 — gas-lead sealing ring

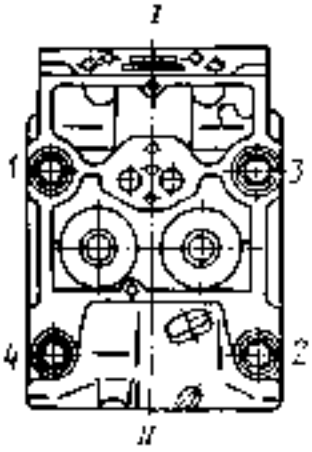

Fig. 27. Pattern of Tightening of Bolts on Cylinder Head
I — inside; II — [illegible]

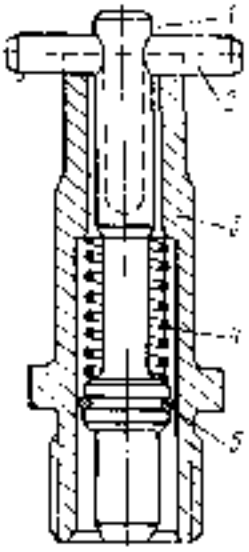

Fig. 28. Flywheel Lock:
1 — lock; 2 — pin; 3 — [illegible] ring; 4 — [illegible]; 5 — packing ring

is provided used for taking in the flywheel lock (Fig. 26); twelve holes are used for cranking the shaft by hand.

Piston (Fig. 29) is made of high silicon-aluminium alloy. The piston head has a non-split toroidal combustion chamber; besides, an insert made of heat-resistant cast iron is moulded under the upper compression ring in the groove.

Piston pin 5 is a hollow floating-type pin. The pin is locked with two spring locking rings against axial shifting in the piston.

Each piston mounts two compression rings 2 and 3 of one-lateral trapezoid section and one oil control ring 1 composed of a cast iron box-section ring and spring-coiled expander 8

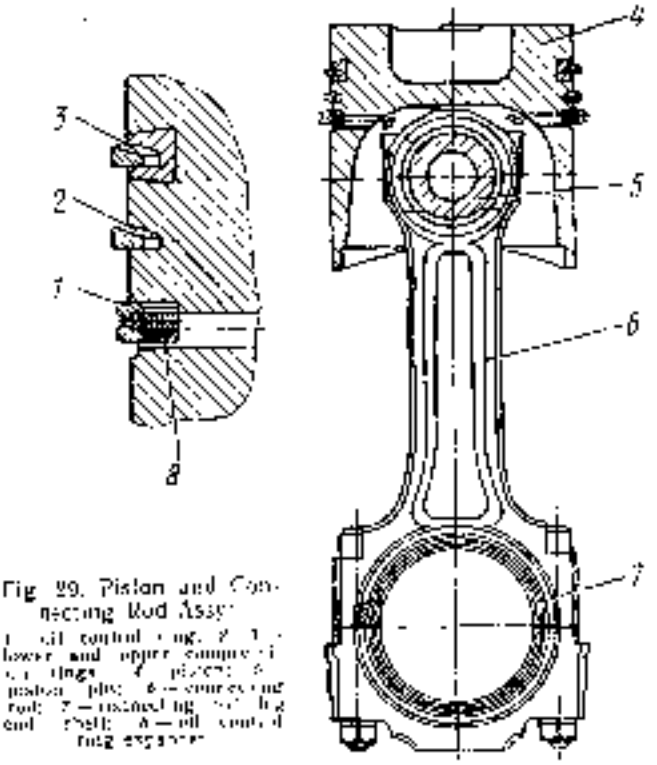

Fig. 29. Piston and Connecting Rod Assy:
1 — oil control ring; 2, 3 — lower and upper compression rings; 4 — piston; 5 — piston pin; 6 — connecting rod; 7 — connecting rod big end (split); 8 — oil control ring expander

Connecting rods 6 made of steel are of double T-section. The connecting rod is splittable. The connecting rod is machined finally in assembly with its cap, therefore, the caps could not be interchanged. In the engine the connecting rods are fitted only in assembly with their caps. Each set «cap — connecting rod» has the same marks of three-digit numerals. Besides, the connecting rod cap has the cylinder ordinal number.

The connecting rod big end bearing has replaceable shells, that of the small end is made as a bimetal bushing having a bronze-made carrying layer. The connecting rod cap is fastened with two bolts press-fitted in the rod.

For disassembling the «piston — connecting rod» set, remove the locking rings off the bosses and, after heating the piston in an oil bath up to 80 °C, pick out the piston pin. For taking out the piston rings, apply a special remover.

Before re-assembling, wash all the parts, blow through the oil ducts with compressed air, coat the friction surfaces with diesel oil. Check that the piston pin fits easily the pre-heated piston.

Do not fit the pin in a cold piston.

For fitting the compression and oil control rings on the piston, use a fixture. When fitting, place the compression rings with skewed side marked ВЕРХ (Top) facing the piston head. The composite oil control ring should be placed part by part: first insert the spring coiled expander in the groove, then place the oil control ring so that the expander joint is diametrically opposed to the ring lock. Spread apart the compression ring locks.

Recesses for valves in the piston head are located at one side with the slots for tabs of the connecting rod shells and displaced towards the Vee of the engine. The connecting rod cap bolts should be tighte-

ned until they come out through 0.25—0.27 mm in two steps. Permissible tightening torque is 130—140 N·m (13—14 kgf·m).

Timing Mechanism

The timing mechanism is of the overhead valve type, with camshaft *1* (Fig. 30) disposed below,

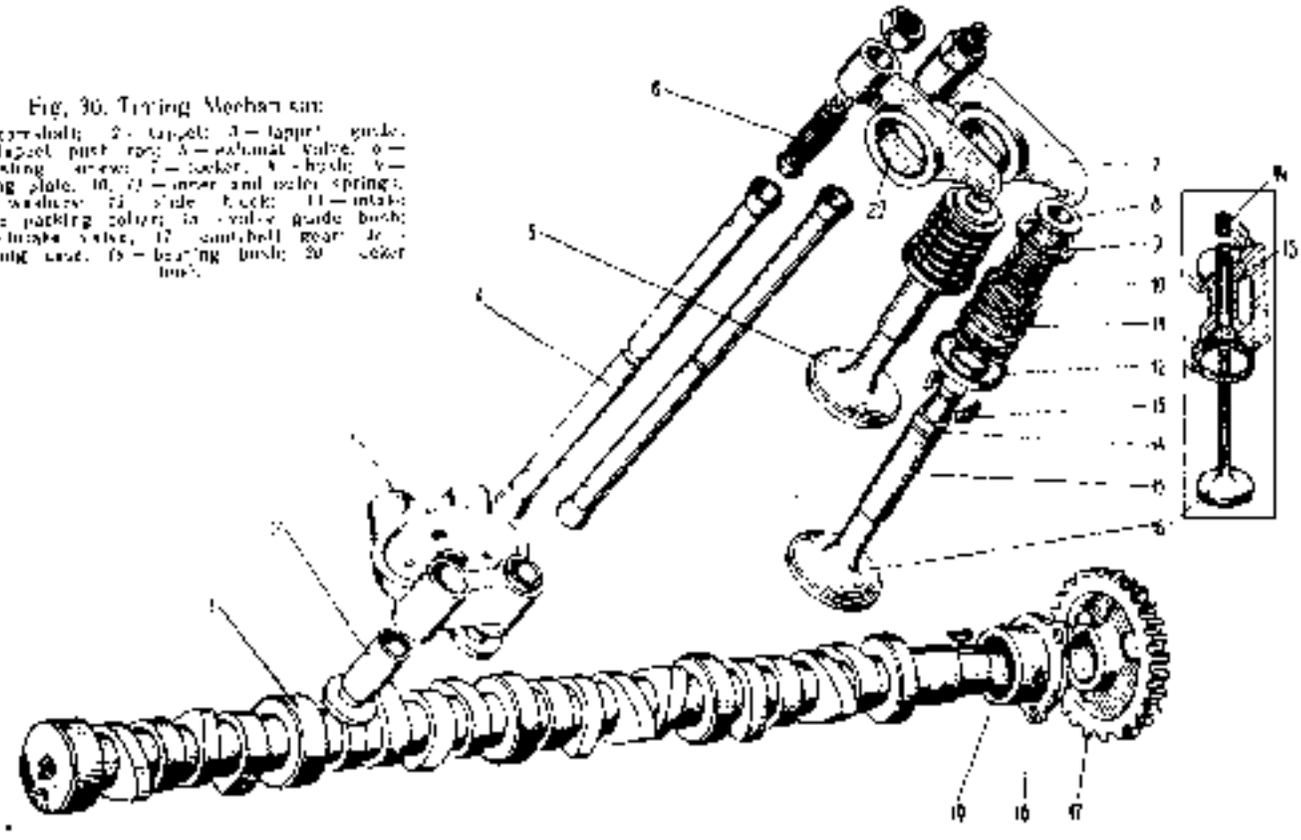

Fig. 30. Timing Mechanism:

1 — camshaft; 2 — tappet; 3 — tappet guide; 4 — tappet push rod; 5 — exhaust valve; 6 — adjusting screw; 7 — rocker; 8 — bush; 9 — spring plate; 10, 11 — inner and outer springs; 12 — washer; 13 — slide block; 14 — intake valve packing collar; 15 — valve guide bush; 16 — intake valve; 17 — camshaft gear; 18 — bearing case; 19 — bearing bush; 20 — rocker bush.

plate-type tappets *2* and tappet removable guides *3*.

Camshaft is made of steel, the surfaces of cams and journals are case-hardened.

The camshaft is mounted in the Vee of the engine cylinder block in five sliding bearings. The camshaft rear end has a press-fitted spur gear.

The camshaft is driven from a gear of the crankshaft via intermediate gears *2* and *3* (Fig. 31).

When pre-setting the timing and positioning of the fuel high-pressure pump drive correctly, when assembling, mount the gears with reference to the marks made on their end faces. The camshaft is fixed against axial displacement by bearing case *18* (see Fig. 30) of the rear support, which is fastened on the cylinder block.

Valve tappet is a steel-made hollow part mounted in guides *3* which are fastened to the cylinder block. Tappet push rods *4* have hit-in end-pieces.

Valve rockers. Adjusting screw *6* with a locknut is screwed in the rocker *7* shorter arm, used for adjusting clearances in the valve mechanism. In axial displacement the rocker is limited by a plate-type lock mounted under the support.

Valves travel in cermet guide bushes *15* press-fitted in the cylinder head. The intake valve guide bush has packing collar *14* that limits oil flowing in the clearance formed between the valve rod and guide bush.

The valve seats due to two cylindrical springs *10* and *11* having the different sense of coiling. Valve slide blocks *13* are squeezed by plate *9* via intermediate bush *8*. When the engine runs, valves could turn relatively the seat due to vibration.

Tappet-to-valve thermal clearances adjustment. The clearance formed between the rod end and rocker may be adjusted on a cold engine only, at least 30 min after it has been stopped and the fuel feed is shut off. Proceed adjusting simultaneously in the two cylinders which follows one after the other during compression (or working) strokes of these cylinders. The valves of the adjusted cylinders must be closed now.

When adjusting clearances, set the crankshaft in sequence in definite positions *I, II, III, IV*.

When adjusting, proceed in the following sequence of operations:

— remove the cylinder head covers;

— check the cylinder head bolts for fastening;

— pull out the lock available on the flywheel housing, turn it through 90° and set it in the lower position;

— remove the handhole cover in the clutch case lower part;

— crank the shaft in the sense of rotation and set it in the position whereat the lock is meshed with the flywheel under the force of the spring. Check that mark *B* (see Fig. 52) on the advance fuel-injection automatically-operated coupling is in the upper position. This position of the crankshaft corresponds to the initial fuel feed in the first cylinder.

If the mark is in the lower position, release the lock out of mesh with the flywheel and crank the shaft through one revolution. Also check that the lock comes in mesh with the flywheel. Pull out the lock,

turn it through 90° and set it in the upper position.

Crank the shaft using a bar inserting it in the holes drilled all around on the flywheel. Turn of the flywheel at one angle subtense (span between two adjacent holes) corresponds to a turn of the crank-

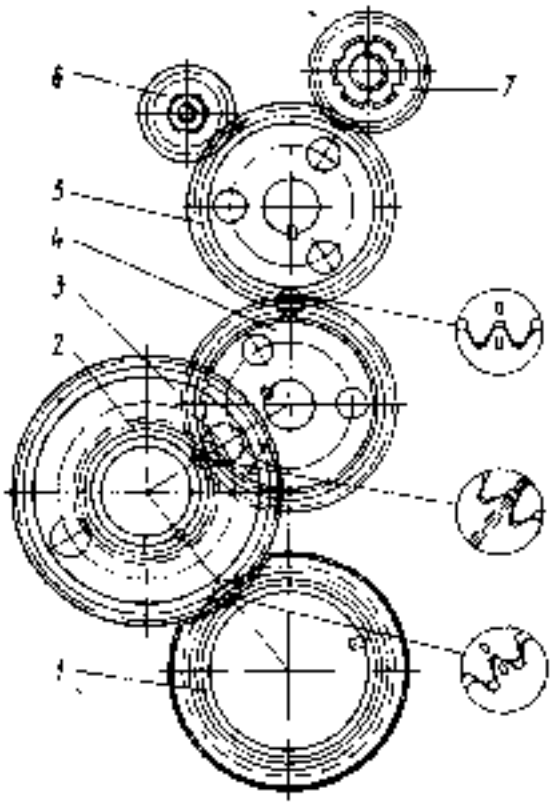

Fig. 31. Gears Drive.

1 — timing gear; 2 — intermediate gear; 3 — crankshaft gear; 4 — oil pump drive gear; 5 — fuel pump drive gear; 6 — idler gear; 7 — [illegible] of drive gear

shaft through 30°. Bar the crankshaft through 60° in the sense of rotation and set it in position *I*. Now, check that the valves of the first and fifth cylinders are closed (the rods of these cylinders should be turned easily by hand);

— using a dynamometric wrench, check the torque of the rocker support fastening nuts on the adjusted cylinders. The torque must be within 44—56 N·m (4.4—5.6 kgf·m);

— using a feeler, check the clearance between the rocker tips and valve ends on the adjusted cylinders. Re-adjust, if need be, for this purpose, slacken off the adjusting screw nut, fit a feeler of required thickness in the gap and, using a screw driver and turning the screw, set the desired gap. Holding the screw with the screw driver, tighten the nut and check the clearance. Feelers of 0.25 mm thickness for the intake valve and 0.35 mm for the exhaust valve should enter freely, and of 0.30 mm thick for the intake and 0.40 mm for exhaust valves — with an effort. The torque of the adjusting screw nut must be within 44—56 N·m (4.4—5.6 kgf·m). Then proceed adjusting the clearances in the valve mechanism by pairs in cylinders: fourth and second (position *II*), sixth and third (position *III*), seventh and eighth (position *IV*), cranking the shaft through 180° in each instance;

— start the engine and listen to it. If the clearances have been adjusted correctly, no knocking could be sensed in the valve mechanism;

— re-install the clutch case handhole cover;

— re-install the cylinder head covers.

Lubrication System

The lubrication system is designed for feeding pre-strained oil to friction surfaces and for cooling them when the engine runs.

Engine lubrication system (Fig. 32) is of mixed type, with a wet crankcase. The latter is a steel stamped piece, having a gasket of 2.5 mm thick between the crankcase and block. Oil circulates in the system forced from an oil sump.

Oil pump (Fig. 33) is a two-section gear-type unit. The oil pump delivery section supplies oil to the lubrication system main line, and the cooler section, to the centrifugal filter and to the cooler.

Safety valve *12* of the cooler section is adjusted to about 850—1160 kPa (8.5—11.6 kgf/cm²), used for by-passing oil from the delivery chamber to the oil sump.

Safety valve *9* of the delivery section is adjusted to about 850—1160 kPa (8.5—11.6 kgf/cm²). Differential valve *11* of the delivery section is used for limiting pressure in the main line and it is adjusted to opening pressure of 420—470 kPa (4.2—4.7 kgf/cm²).

Full-flow oil filter (Fig. 34) is secured to the cylinder block right-hand wall; it comprises two replaceable filtering elements. By-pass valve *23* is built in the filter casing, having a contact-type pickup. The valve opens when the pressure before and after the filtering elements rises to 250—300 kPa (2.5—3.0 kgf/cm²). If the filter resistance increases (due to clogging of filtering elements, solidification of oil at low temperatures), oil is supplied to the main line of the lubrication system through the by-pass valve, escaping filtering element *6*. When by-pass valve *23* operates, the contacts close in the warning indicator and lamp (indicator) *5* (see Fig. 16) glows on the instrument board inside the cab. This lamp may glow only when the engine is started and the crankshaft rotates at minimum rotational speed.

The filter casing houses oil pressure pickup *2* (see Fig. 34) and oil pressure alarm drop pickup *1* in the main line. If the oil pressure drops lower than 70 kPa (0.7 kgf/cm²), lamp (indicator) *2* (see Fig. 14) glows on the instrument board.

For replacing the filtering elements:

— screw out drain plugs *14* (see Fig. 34) on hoods *8* and drain the oil;

— turn out filter hood fastening rod *7* and remove the hood in assy with the element;

— extract filtering element *6* out of the hood;

— in the same sequence remove the other hood and extract the filtering element;

— wash the filter hoods in diesel fuel;

— check the condition of packing elements on gasket *3* and cup *16*;

— replace the filtering element and re-assemble the filter;

— check that no oil leaks through the joints of the filter on the running engine. Otherwise, tighten rod *7*, or if necessary, replace packing ring 5.

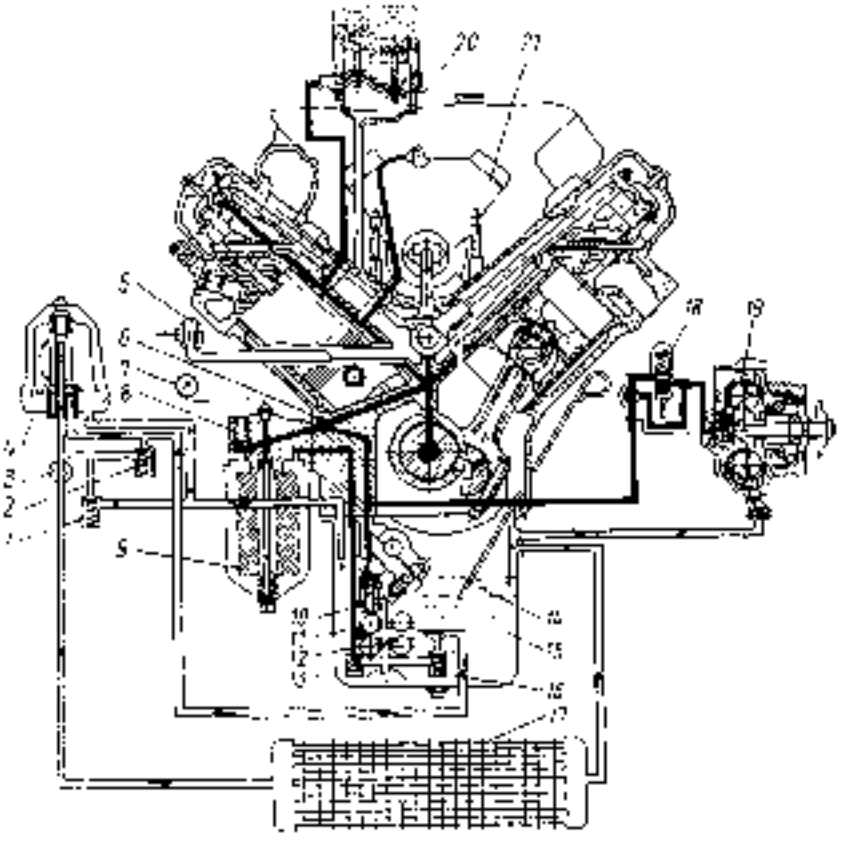

Fig. 32. Engine Lubrication System:

[illegible] — centrifugal filter drain valve; [illegible] — centrifugal filter bypass valve; [illegible] — oil cooler switch [illegible]; [illegible] — centrifugal oil cleaning filter; [illegible] — breather; [illegible] — oil [illegible] line; [illegible] — oil pressure indicator; [illegible] — full-flow filter bypass valve; [illegible] — oil cleaning filter flow line; [illegible] — lubrication system differential valve; [illegible] — oil pump delivery and cooler sections; [illegible] — oil pump safety valves; [illegible] — oil dipstick; [illegible] — oil sump; [illegible] — oil cooler; [illegible] — hydraulic coupling switch; [illegible] — fan drive hydraulic coupling; [illegible] — compressor; [illegible] — high-pressure fuel pump.

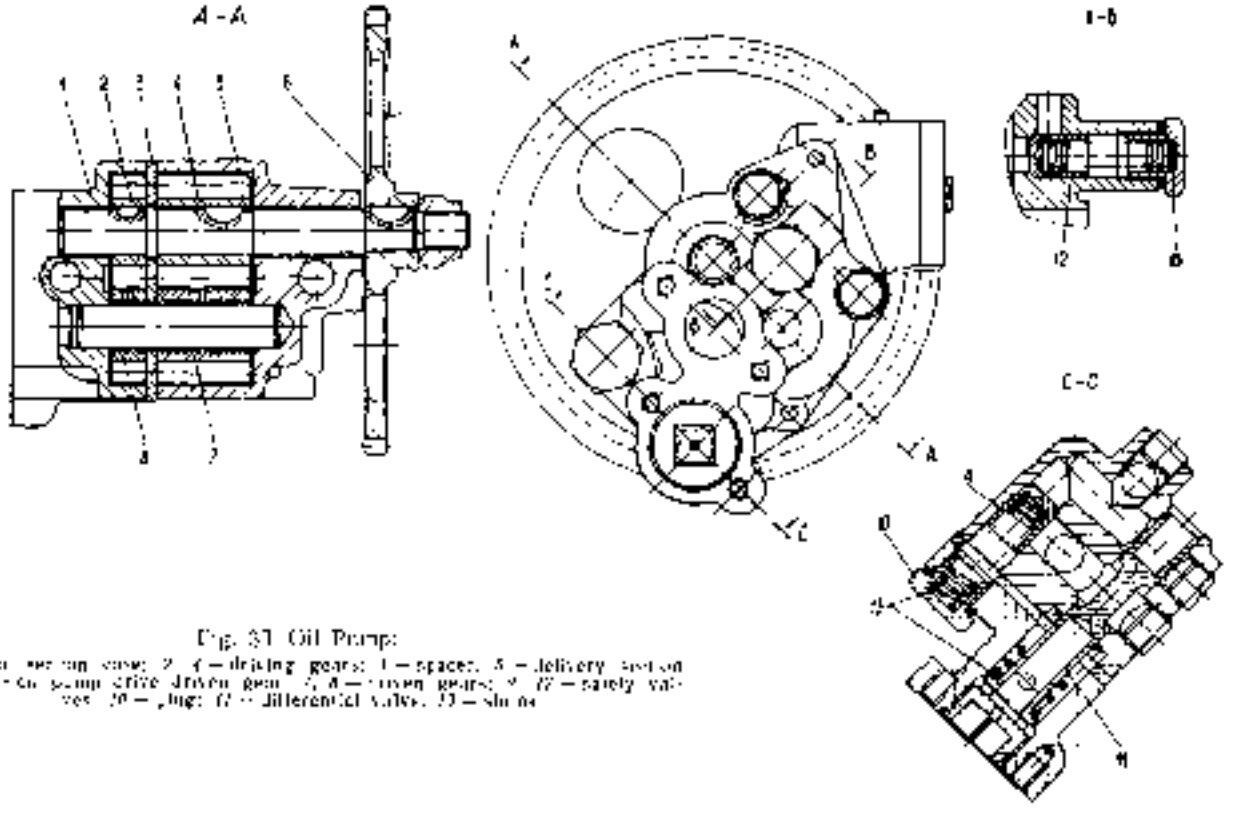

Fig. 33. Oil Pump:

[illegible] — cooler section cover; [illegible] — driving gears; [illegible] — spacer; [illegible] — delivery section case; [illegible] — oil pump drive driven gear; [illegible] — driven gears; [illegible] — safety valves; [illegible] — plug; [illegible] — differential valve; [illegible] — shaft.

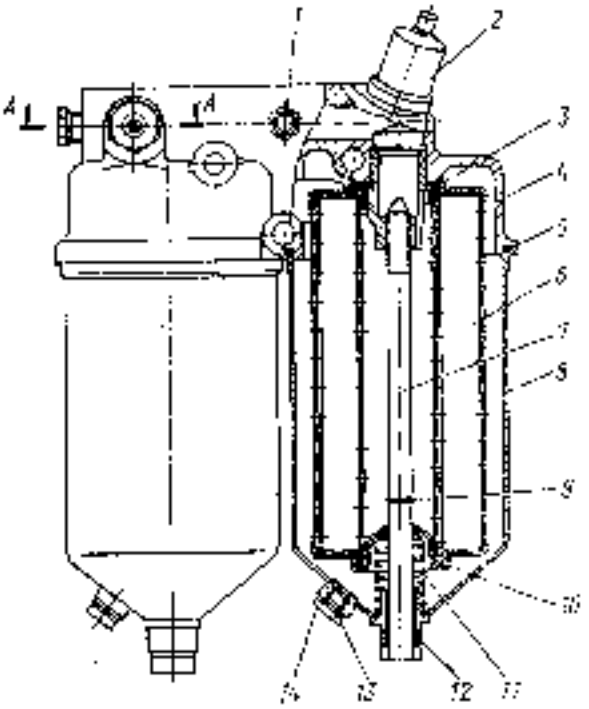

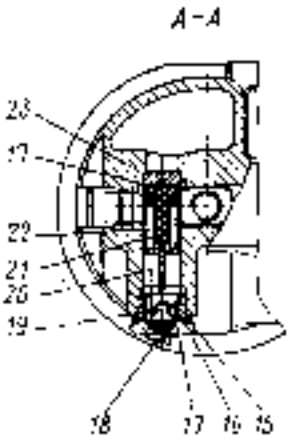

Fig. 34 Full-flow Oil Filter:

1 — oil pressure warm drop pickup; 2 — oil pressure pick-up; 3, 10, 13 — gaskets; 4 — casing; 5, 12 — packing rings; 6 — filtering element; 7 — rod; 8 — bush; 9 — retaining ring; 20 — packing cup; 14, 15, 25 — springs; 16, 18 — plugs; 17 — sleeve; 19 — screw; 23 — moving contact; 24 — oil filter clogging gauge housing; 30 — by-pass valve

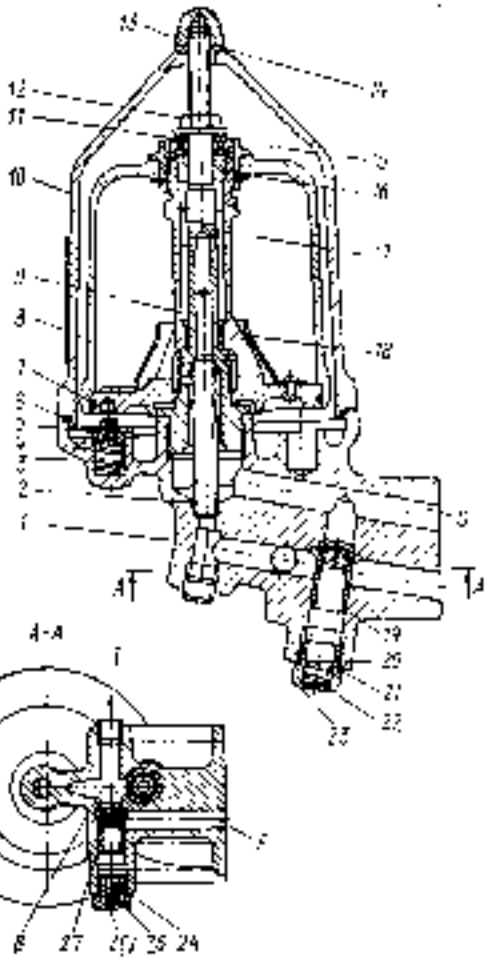

Fig. 35 Centrifugal Oil Filter

1 — filter casing; 2 — oil outlet tube; 3, 25, 26 — springs; 4 — lock pin; 5 — lock plate; 6, 7 — packing rings; 8 — rotor head; 9 — rotor; 10 — filter hub; 11 — pressure ball bearing; 12 — union nut; 13 — filter housing cap; 14, 20, 34 — gaskets; 15 — rotor head ring; 16 — bush; 17 — rotor pin; 18 — screen; 19 — by-pass valve diaphragm; 22 — slim; 24, 27 — plugs; 23 — drain valve plunger; A — duct for draining oil to oil cooler; C — oil feed duct; F — duct for draining oil to crankcase; J — to oil cooler

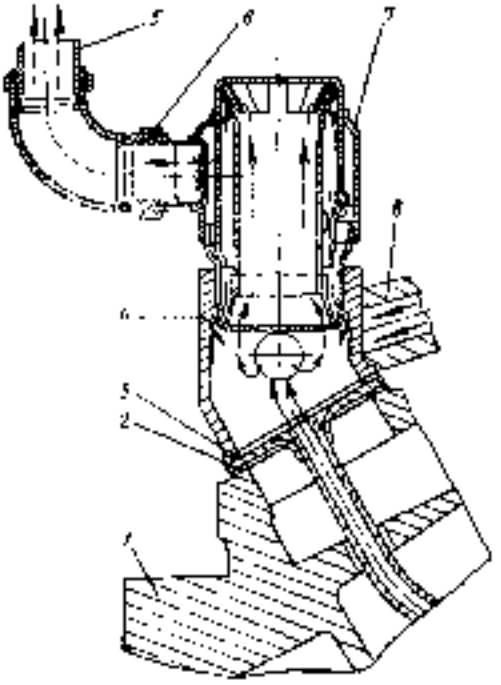

Fig. 36 Crankcase Ventilation System:

1 — flywheel housing; 2 — breather spacer; 3 — gasket; 4 — breather flange; 5 — engine crankcase ventilating tube; 6 — connecting hose; 7 — breather; 8 — gas feed branch

Oil centrifugal filter is mounted on the cylinder block front cover at the right of the engine. This filter is designed for straining the oil additionally from solid particles.

When the engine runs, oil is pressed out of the pump cooler section to the filter, so rotating rotor *9* (Fig. 35). Under the action of centrifugal forces solid particles contained in the oil are thrown to walls of hood *8* of rotor *9* whereat they settle thus forming dense sediment to be removed when the filter is subject to washing.

After straining the oil flows through the hole drilled in the rotor pin and tube *2* to the oil cooler or through the drain valve of the filter casing, pre-adjusted to 110—167 kPa (1.1—1.7 kgf/cm²), to the cylinder block sump. The by-pass valve mounted in the filter casing provides for oil flowing to the oil cooler escaping the centrifugal filter. The by-pass valve opens if oil pressure rises to 600—650 kPa (6.0—6.5 kgf/cm²).

For washing the centrifugal filter:

— undo nut *13* and remove the filter hood;

— turn the rotor around so that lock pin *4* enters the holes in the rotor. Undo nut *15* and remove hood *8*. **When servicing the filter, do not remove the rotor off the pin.**

Remove sediment out of the rotor hood, wash the parts in diesel fuel. Test nut *12* and tighten it, if need be, the torque must be 80—90 N·m (8—9 kgf·m). Reassemble the filter in the reverse sequence of operations after checking packing ring *6* of the filter hood. Take up nuts *13* and *15* by a torque of 20—30 N·m (2—3 kgf·m).

When servicing the filter, do not disturb balance of the rotor. Therefore, when re-assembling the filter, match the marks on the rotor and the rotor hood.

Oil cooler is a tube plate two-row air-cooled unit. If the ambient temperature drops below minus 10 °C, shut off the cooler closing the valve mounted on the oil centrifugal filter casing (see Fig. 10).

Crankcase ventilation is of natural type, having a labyrinth breather mounted on the flywheel case at the right on the engine, and a gas exhaust pipe. Gases exhausted out of the case flow through trapping breather *7* (Fig. 30) that separates oil particles from the pressure gases.

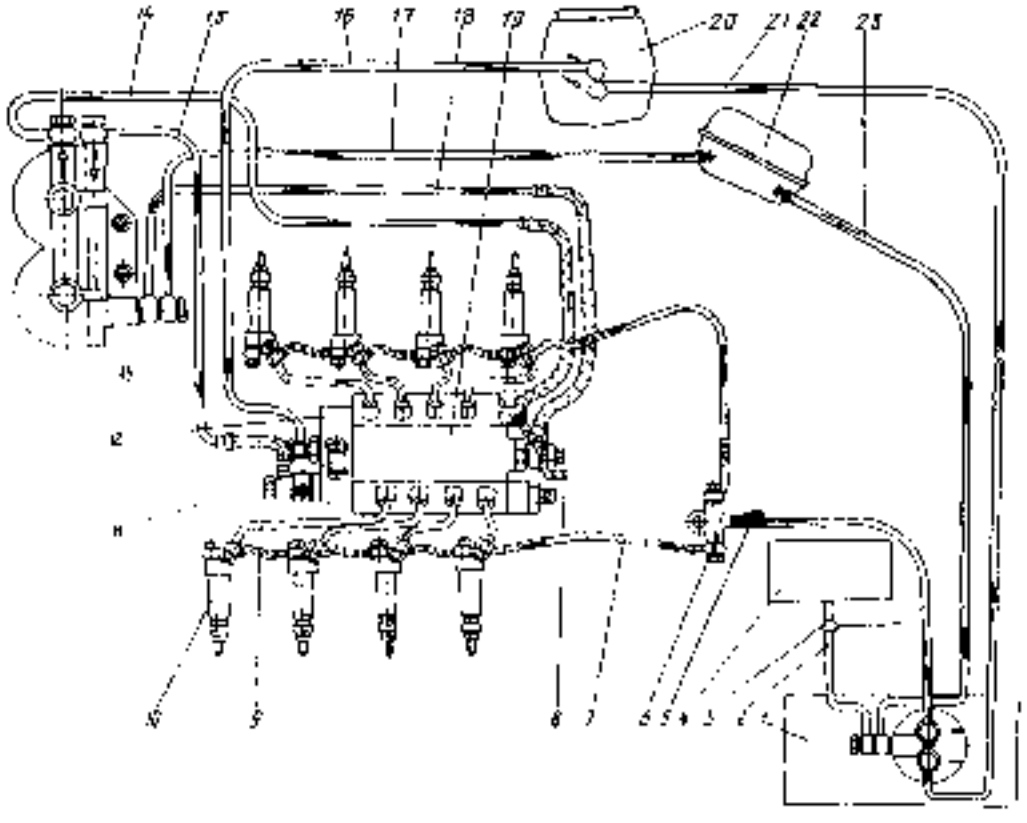

Fig. 37. Fuel System

[illegible]

Change of oil in the engine crankcase. Drain oil through the hole available in the crankcase after warming the engine beforehand. Check that no water or metal particles contaminate the oil; their presence is intolerable.

Fill fresh oil through the filler available in the engine front beyond the fan drive hydraulic coupling:

— fill oil up to mark *B* on the level indicator;

— start the engine and run it during 5 min at low speed to fill the oil chambers of the engine;

— stop the engine and, after two or three minutes, add oil up to mark *B* on the level indicator.

To check the oil level in the engine crankcase place the truck on a level horizontal ground. Check the oil level in 2... 3 min after the engine is stalled, by the marks of the pointer to be found at the left-hand side of the engine. The level should be between marks *B* and *H* of the level indicator.

Fuel System

The fuel system for Ural-4320-02 and Ural-4420-02 trucks is shown in Fig. 37.

From main fuel tank *1* fuel flows to fuel feed pump *12* that forces it via coarse *20* and fine *13* fuel filters to high-pressure fuel pump *19* that pumps fuel through tubes *8* to injectors *10*. Fuel is injected in engine cylinders in the sequence of operation.

Excessive fuel and also air entrapped in the system are expelled through the HPFP reducing valve, fine filter nozzle via drain pipes *17* and *20* to the fuel tank. Fuel that seeps through the joints of precision parts of injectors is drained also to the fuel tank via drain pipes *7* and *5*.

To warm the fuel in the cold season fuel tank *22* of the starting preheater houses a coil connected with the engine cooling system. Fuel flowing from the high-pressure fuel pump and the fine filter is warmed. Surplus fuel from tank *22* is returned via the intake to fuel tank *1*. With the engine running, low-pressure fuel feed pump *12* delivers fuel already warmed in the intake of tank *1*.

Connecting hoses are used to reduce a loss of heat from warmed fuel. The hoses cover the distance from tank *1* to the engine underhood space. The quantity of fuel in the main tank is measured by a fuel-level electric pickup available in the tank, and checked by indicator *9* on the instrument board (see Fig. 14).

Fuel tanks are located: the main tank (204 ltr in capacity) — at the left of the truck on the frame side member, the auxiliary tank (57.6 ltr in capacity) — on the spare wheel holder support.*

The designs of main and auxiliary fuel tanks fillers, as well as the main tank plug provides for the devices for their sealing.

Coarse fuel filter (Fig. 38) is mounted under the hood at the right side.

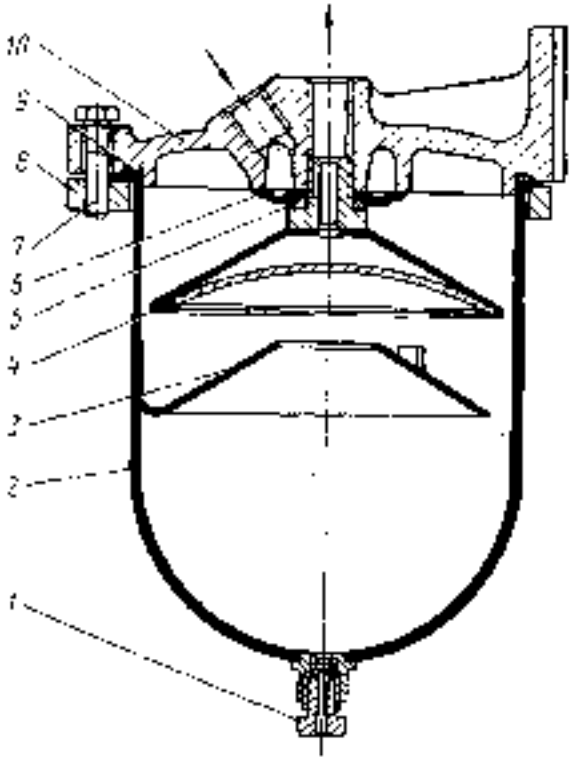

Fig. 38. Coarse Fuel Filter

1 — drain plug; *2* — cup; *4* — diaphragm; *5* — filtering element; *6* — washer; *7* — drain hose; *8* — bolt; *9* — flange; *10* — packing ring; *10* — casing

Fuel flows from the fuel tank via a feeding union to distributor *6* and down to cup *2*. Large particles and water are collected on the cup bottom.

From the top part fuel flows through the filtering element *4* gauze to the outlet union and then, via pipes, to the low-pressure fuel-feed pump.

For washing the coarse fuel filter:

drain fuel out of the filter after screwing out drain plug *1*;

— unscrew bolts *7* and remove cup *2*;

— screw filtering element *4* out of casing *10*;

flash the filtering element gauze and the cup interior using non-ethylated gasoline or diesel fuel and blow through with compressed air;

— place washer *5*, distributor *6* on the filtering element and screw it in the casing;

— fit the filter cup and bolt it;

— tighten the drain plug;

· check that no air is sucked in through the filter when the engine is running. Otherwise, repair by tightening bolts *7*.

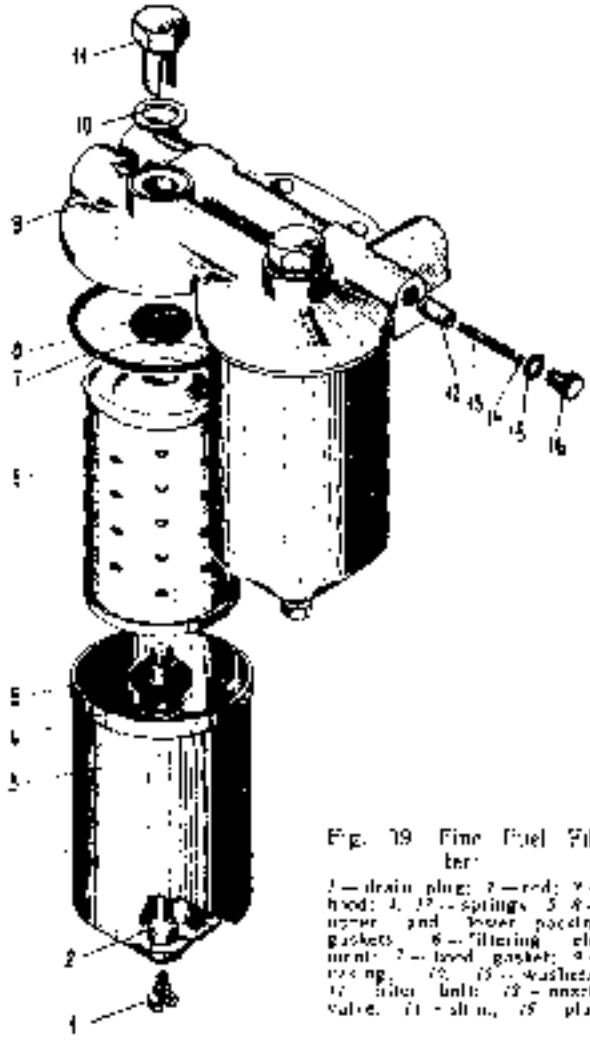

Fig. 39. Fine Fuel Filter

1 — drain plug; *2* — cup; *3* — body; *4*, *12* — springs; *5*, *8* — upper and lower packing gaskets; *6* — filtering element; *7* — hood gasket; *9* — packing; *10*, *13* — washers; *11* — filter bolt; *14* — nozzle valve; *15* — shim; *16* — plug

Fine fuel filter (Fig. 39), mounted on the engine right side, has two changeable cardboard-made filtering elements *6*. Casing *9* houses drain nozzle valve *12* pre-adjusted to excess pressure of (220±±20) kPa [(2.2±0.2) kg/cm²]. For readjusting the valve, use shims *14* to be placed inside the valve plug.

* The Ural 1120-32 and Ural-41202-02 bolster trucks have main tanks rated each at 290 ltr. No auxiliary fuel tanks are available on the Ural-44202-02 bolster truck and Ural-43202-02 towing truck.

For replacing the filtering elements of the fine fuel filter.

screw out drain plugs *1* and drain fuel partially out of the filter, then screw on the plugs;

— turn out bolts *11*, remove hoods *3* and extract filtering elements *6*;

– flush the hoods using non-ethylated gasoline or pure diesel fuel;

fit a new filtering element in each hood;

– place upper packing gasket *8* with the lugs facing inside on hood rod *2*.

– place bolts *11* with washers *10* and, if need be, new gasket *7*; reinstall hoods *3* with the elements and tighten the bolts;

– start the engine and check that the filter is tight. Otherwise, tighten bolts *11* properly.

High-pressure fuel pump (HPFP), Fig. 40, mounted in the engine cylinder block Vee, is designed for feeding fuel evenly, in strictly metered portions in each cylinder of the engine. Fuel is supplied under high pressure depending on the engine operating duty.

The HPFP comprises case *20*, camshaft *16*, pumping sections, fuel-feed pump, speed governor and advance fuel-injection coupling *10*. When the camshaft rotates, torque is transmitted to a roller push-rod and, via the push-rod pivot, to the pumping section plunger.

Each pumping section (Fig. 41) comprises casing *12*, bush *9*, and plunger *7*, turning bush *18*, delivery valve *16*. Bushes *9* and plungers *7* are machined with a high degree of precision and selected in plunger pairs by the method of grinding in assembly. Therefore, do not split the pairs, and replace these in the course of service in assembly only.

On the governor cover are cast numerals *1*, *4*, *5* and *8* (Fig. 42) marking the location of the corresponding sections. Numbers of injectors and connection of pumping sections with engine injectors are shown in Fig. 48.

Plunger *7* (see Fig. 41) turns relative to bush *9* for changing the fuel quantity supplied, forced by rack *17* via turning bush *18*.

For setting the HPFP and its controls, and also for readjusting and checking in some cases, refer to the marks made (see Fig. 52).

Speed governor is of all-duty direct-action type, used for regulating automatically the fuel quantity supplied to the cylinders relative to the engine load, so maintaining the preset speed of rotation. The governor is mounted in the HPFP case span and driven by the pump camshaft via gears.

The governor top cover (see Fig. 42) mounts: governor control lever *2*, stop lever *7*, adjusting bolts and filler plug *5*.

Moving joints of the parts of the governor and HPFP are oiled from the engine lubrication system.

The governor speed duty is controlled by lever *2* which is tied with the fuel-feed control pedal. Each position of the lever corresponds to a definite speed of rotation of the engine crankshaft.

When the governor operates in a definite duty, centrifugal forces are balanced by the governor spring. If the crankshaft speeds up, the governor weights overcome the spring force and shift the governor lever and coupled HPFP rack in a position whereat the fuel feed is reduced.

If the crankshaft speeds down, the governor weight centrifugal force also decreases and the governor lever linked with the rack is backed by the spring so returning backwardly; thus, the fuel feed increases and the crankshaft speeds up.

Advance fuel-injection automatically-operated coupling is of the centrifugal type with the 18° advance injection angle, used for changing the moment of fuel injection in the cylinders relative to the speed of the crankshaft rotating in the engine. Use of the coupling improves considerably characteristics of the engine when it runs in various speed duties. Driven coupling member *9* (Fig. 43) is secured on the HPFP camshaft. Driving coupling member *15* is fitted on the driven coupling member hub on which it could revolve. Bush *17* is placed between the hub and the coupling member. The driving coupling member is actuated by a timing intermediate gear via a shaft having flexible connecting couplings. Torque to the driven coupling member is applied from two counterweights *7*. Spacer *8* of the driving coupling member thrusts against the counterweight pin at one end and against the shaped lug at the other end.

Springs *4* tend to hold the counterweights at thrust against driving coupling member bush *17*.

When the crankshaft speeds up, the counterweights move apart under the action of centrifugal forces and driven coupling member turns relative to the driving one in the sense of the camshaft rotation, so causing an increase of the advance fuel-injection angle. When the crankshaft speeds down, the counterweights come together if backed by the springs. The driven coupling member turns together with the pump shaft in the opposite direction, so causing a decrease of the advance fuel-injection angle.

Lubricate the advance fuel-injection coupling with the oil used for the engine.

The coupling casing front face has two holes stopped with screws *13* and packing washers, intended for filling oil in the coupling.

Low-pressure fuel-feed pump of the piston type is mounted on the governor casing cover.

When piston *3* (Fig. 44) is actuated by cam *10* backed with spring *7*, vacuum is built in chamber *A* above the piston and intake valve *5* opens; fuel starts flowing from the tank through the coarse filter to the chamber above the piston.

Simultaneously, the fuel is forced from under the piston from chamber *B* to the delivery line escaping delivery valve *1*.

When piston *3* returns, the fuel that fills the chamber above the piston flows through delivery valve *1* which opens to the chamber under the piston. Then process goes repeatedly.

Hand fuel-feed pump is designed for feeding fuel to the HPFP when the engine does not run and for evacuating air out of the fuel system before starting the engine. The pump is mounted on the low-pressure fuel-feed pump case.

Injector is designed for injecting a definitely metered portion of fuel in the combustion chamber. The engine is outfitted with injectors of enclosed type with hydraulic needle lift and fixed-type atomizers, each having four nozzle holes. The pressure of start of injection in a new injector is 22 000—22 700 kPa (220—227 kgf/cm²). The injector is set in the cylin-

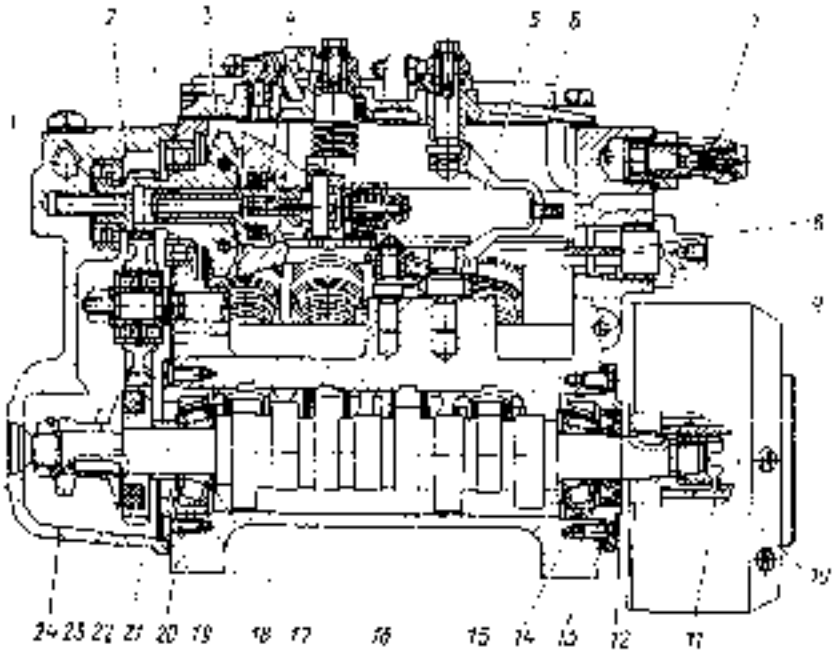

Fig. 40. High-Pressure Fuel Pump.

1 — governor rear cover; 2 — governor intermediate gear; 3 — counterweight holder; 4 — counterweight (coupling); 5 — spring cover; 6 — governor upper cover; 7 — by-pass valve; 8 — rack; 9 — rack plug; 10 — advance fuel injection coupling; 11 — ring bolt; 12, 14 — bearing caps; 13 — shim; 15 — packing ring; 16, 17 — thrust washers; 18 — cam shaft; 19 — thrust bolt; 20 — pump rear; 21 — governor driving gear; 22 — slide block; 23 — flange; 24 — cam

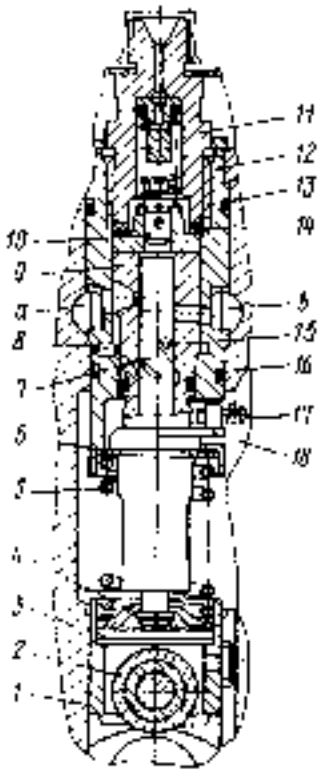

Fig. 41. HPFP Pumping Section:

1 — HPFP case; 2 — pumping section; 3 — push rod; 4 — pivot; 5 — lower plate; 6 — spring; 7 — supporting washer; 8 — plunger; 9 — plunger bush; 10 — delivery valve; 11 — shim; 12 — pumping section cover; 13, 14 — upper and lower packing rings; 15 — rubber washer; 16 — plunger right grease shut-off edge; 17 — rack; 18 — plunger curving bolt; 19 — suction chamber; 20 — roll chain box

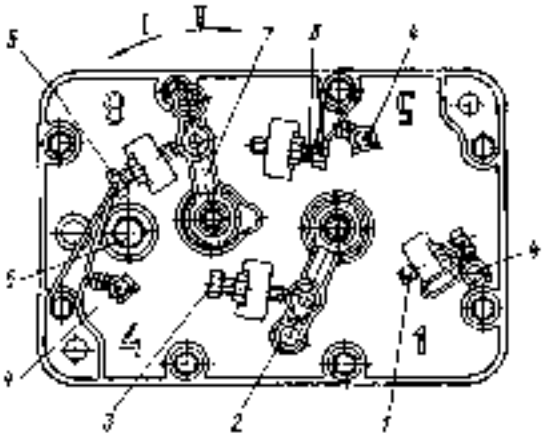

Fig. 42. Governor Top Cover:

1 — governor cover fastening bolts; 2 — governor control lever; 3 — minimum speed limiting bolt; 4 — spacer; 5 — lever; 6 — starting fuel supplying bolt; 7 — stop lever; 8 — stop lever adjusting bolt; 9 — operation; 10 — oil

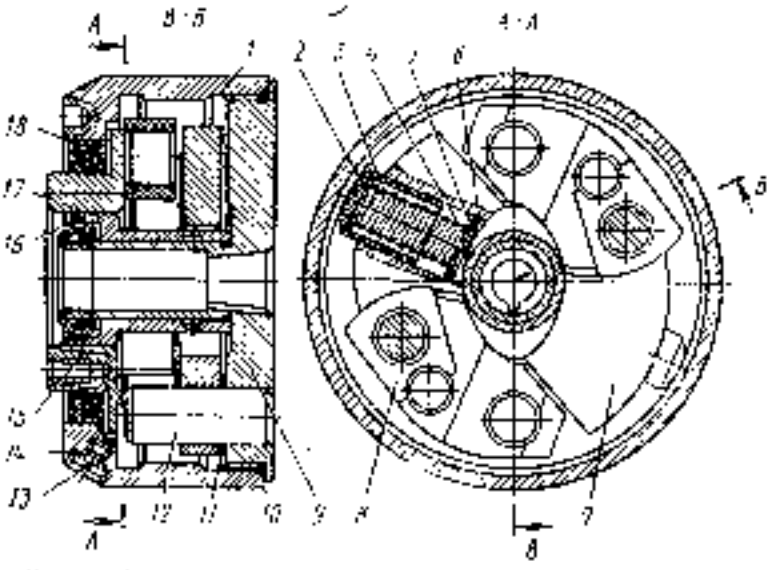

Fig. 43. Advance Fuel-Injection Automatically-Operated Coupling:

1 — spring; 2 — plunger; 3 — pin; 4 — spring; 5, 10 — washers; 6 — fixed ring; 7 — counterweight; 8 — spacer; 9 — driving coupling member; 11 — pacing ring; 12 — counterweight shaft; 13 — screw; 14 — shim; 15 — driving coupling member; 16, 17 — collars; 18 — bush

der head socket and clamped therein. In the upper ferrule the injector is packed with rubber ring 7 (Fig. 45), and in the lower, with copper-made shim

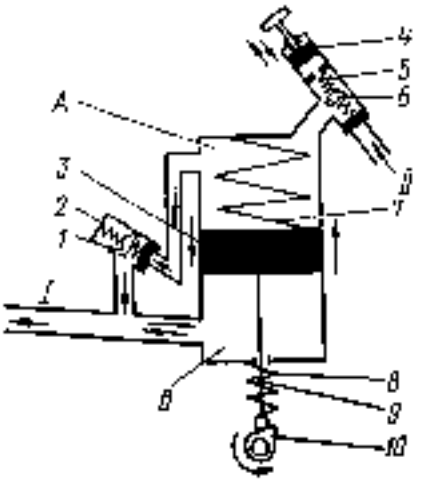

Fig. 44. Operation Diagram of Fuel Feed Pumps:

1 — delivery valve; 2, 3, 7, 8 — springs; 4 — low pressure pump piston; 5 — fuel feed hand pump piston; 6 — intake valve; 9 — push rod; 10 — HPFP shaft cam; A and B — chambers above and under piston; I — to HPFP; II — from tank (fuel tank)

11 (see Fig. 25) placed between the atomizer end face and block head.

The injector atomizer is assembled as a set of specially selected parts of body *1* (see Fig. 45) and

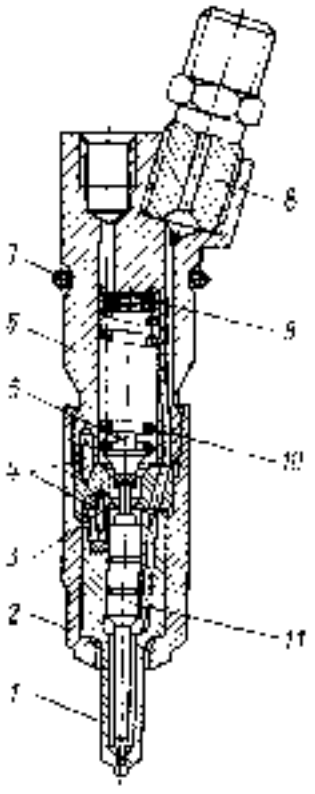

Fig. 45. Injector:

1 — atomizer body; 2 — atomizer nut; 3 — spacer; 4 — setting pipe; 5 — fuel; 6 — case; 7 — packing ring; 8 — union; 9 — union; 10 — spring; 11 — atomizer needle

shut-off needle *11*. Do not split these parts in the course of service.

Fuel is supplied to injector union *8* through the pipe from the HPFP, then fuel comes in the fuel duct of atomizer body *1* through the vertical duct of case *6* via the duct available in spacer *3*.

As the fuel pressure overcomes the force of spring *10*, shut-off needle *11* goes up so opening access for the fuel to atomizer nozzle holes through which fuel is injected in the combustion chamber. As the pressure drops in the fuel pipes lower than that of the spring, the needle comes down shutting off the fuel access to the atomizer nozzle holes, thus interrupting the fuel feed to engine cylinders. The injector spring may be tensioned as desired by means of shims *9*.

Fuel-feed and engine hand stop controls (Figs 46, 47) are of mechanical type comprising a pedal, ties

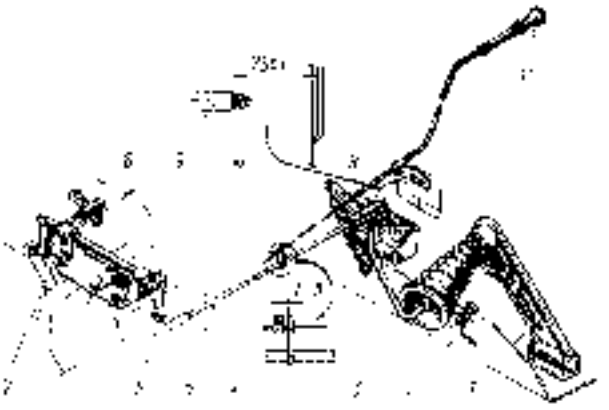

Fig. 46. Fuel Feed Control:

1 — pedal; 2 — pedal stop bolt; 3 — shaft; 4 — cup; 5 — ball joint; 6 — fuel feed control lever; 7 — knob; 8 — governor control lever; 9 — tie rod; 10 — spring; 11 — fuel feed control knob

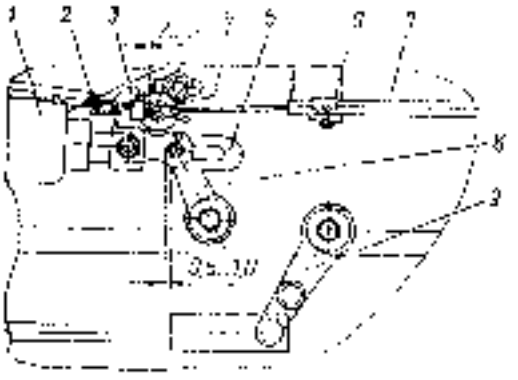

Fig. 47. Engine Hand Stop Actuator:

1 — air cylinder; 2 — spring; 3 — right angle lever; 4 — pin; 5 — stop shackle; 6 — clamp; 7 — engine hand stop rod; 8 — stop lever; 9 — governor control lever

and control levers with knobs. Spring *10* (see Fig. 46) is intended for easing pressure applied to the pedal.

The engine crankshaft constant speed is adjusted by the knob *11* connected with the HPFP control regulator lever *9* (see Fig. 47). To adjust the engine crankshaft constant speed (when inflating tyres, heating the cold engine and so on) it is necessary, first, to depress pedal *1* (see Fig. 46) of fuel feed control, then to pull knob *11* out and to turn it through 90°.

The running engine may be stopped by the stop control knob which is connected, via tie *7* (see Fig. 47) with lever *8*. Both knobs are located inside the cab on the front panel. If the drive has been adjusted correctly, the pedal can be shifted easily and

maximum/minimum speed of the engine crankshaft is so ensured.

When readjusting, ensure the following clearances:

0.5—1.0 mm — between shackle *5* and stop lever *8* pin;

2—3 mm — between pin *4* and engine stop rope clip *3*;

2—3 mm — between pedal *1* (see Fig. 46) and bolt 2; check that lever *8* thrusts at the maximum speed limiting bolt;

2—3 mm — between longitudinal tie 5 bracket and hand control rope clip 4;

(75±1) mm — between corrector 9 casing end and cab panel.

Engine air feed system. Air is supplied to the air cleaner through an air intake pipe.

Air received in the cleaner flows through an inertia grid where best bulk of dust particles is trapped (first stage). Then air flows through a cardboard filtering element where the air is cleaned finally (second stage). At the first stage dust is sucked out due to vacuum built in the ejection pipe. The air cleaner is mounted on the engine intake manifolds connecting branch.

In the course of service of the truck, regularly dismantle and inspect the filtering element. If dust is seen on its internal side, replace the element.

When servicing the first cleaning stage, disconnect the ejection system hose and air pipes from the air cleaner, remove the cover, screw out the fastening rod, extract the cardboard filtering element, dismantle the air cleaner. Wash the casing with the inertia grid in diesel fuel or hot water, blow them through with compressed air and dry. When re-assembling the air cleaner, check and replace torn gaskets. Quality of sealing could be checked by an uninterrupted imprint on the gasket.

Service the cardboard filtering element when the vacuum built in the intake manifold is 7 kPa (700 mm water column) at 2400—2600 min⁻¹ of the crankshaft. For checking vacuum in the intake manifold, use a vacuum gauge applying it via a reducer. The latter must have inner threading M20×1.5 for receiving the vacuum gauge and outer threads K ¾" for screwing it on the left-hand intake manifold.

For servicing the element, remove the cover, screw out the rod and extract the element out of the cleaner casing. If dust is seen on the element cardboard, without ash or soot (element colour is grey), blow it through with compressed air until dust is blown off completely.

To avoid tearing of the cardboard by compressed air, check that its pressure does not exceed 200—300 kPa (2—3 kgf/cm²). When blowing, direct the air jet at an angle, adjusting it by changing the distance from the hose to the element.

If soot, oil or fuel are seen on the cardboard, or if the blow-over proves ineffective, wash the element in warm water (40—50 °C) with a detergent dissolved in it. Immerse the element in the solution for half an hour, then turn or dip it vigorously during 10—15 min. After washing in the solution, rinse the element in fresh warm water and dry. Do not dry above open fire or in air preheated above 70 °C.

After each servicing or when fitting a new element, inspect it by sight illuminating it from inside with a bulb. **Replace the element if mechanical damage, cardboard broken corrugations or ply separations are evident.**

The approximate service life of the cardboard filtering element is 30 000 km. More frequent cleaning of the filtering element might reduce its service life since total attempts of servicing the element are limited (to 5—7 times including washing at least 3 times) due to possible destruction of the cardboard.

Checking and adjusting the fuel equipment. Correct and regular servicing is the mandatory condition for trouble-free operation of the fuel equipment.

After disconnecting fuel pipes, stop against soil all the pipe unions of HPFP, low-pressure fuel-feed pump, and hand fuel-feed pump, injectors, filters and pipe holes, using plugs, caps, stoppers.

Before reassembling, clean all the parts and wash them in pure non-ethylated gasoline or diesel fuel.

Checking and adjusting the injectors. For checking the injectors cleaned out and washed in non-ethylated gasoline or clean diesel fuel, use type KI-1609 instrument of other type similar in design. This instrument can be used for checking the start of injection, quality of fuel atomizing, tightness of the injector.

To adjust the pressure at the start of injection, use shims *9* (see Fig. 45) placing them under spring *10*, after removing nut *2* and atomizer body *1*, spacer *3* and rod *5*. When shims are added in total thickness, the pressure rises. If the shim thickness is changed by 0.05 mm, the pressure is changed by 300—350 kPa (3.0—3.5 kgf/cm²).

Tightness of the nozzle locking cone should be tested during 1 min, and at this, the pressure should be below the injection pressure by 1000 kPa (10 kgf/cm²). The nozzle is considered faulty when fuel leakage reaches two drops per minute.

Quality of atomization is considered satisfactory if the fuel supplied to the injector at 70—80 strokes of the pump lever per minute is injected in a fog-like state without drops and is distributed evenly across the spray cone and each hole of the injector.

Initially and finally the injection cycle should be clearly evident. Fuel injection through a new injector is accompanied with characteristic sharp sound. If such sound is not audible in used injectors, it does not serve as a criterion for their malfunctioning.

When replacing atomizers or injectors, remember that they should have marks «33». Do not use injectors or atomizers of other types.

The HPFP should be checked and adjusted in assembly with the prechecked injectors connected to pump sections (Fig. 48).

On setting the HPFP on the test bench, prime the pump chamber with the oil used in the engine up to the drain hole level on the governor rear cover. Fill the oil through the hole in the upper cover stopped with a plug.

Blank off the drain hole in the rear cover for the time of testing.

When checking the pump, proceed as follows: first check the initial fuel-feed by pump sections, then the delivery and uniformity of the feed. The moment of initial fuel-feed should be determined by start of fuel flow in the fuel-feed tester (Fig. 49).

Proceed checking and adjusting the initial fuel-feed, beginning from the eighth section. Layout of

sections is shown on the governor cover. Check that the marks on pump cases and automatically-operated coupling come aligned at the very start of fuel-feed by the eighth section.

An initiation of fuel-feed by other pump sections may be estimated by the angle of turn of the cam-

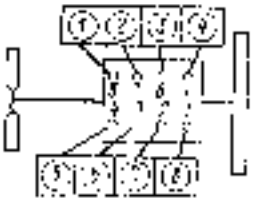

Fig. 48. Diagram of Connection of HPFP Sections with Engine Injectors

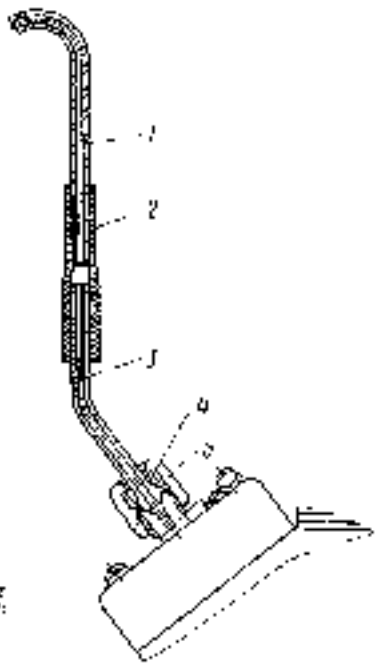

Fig. 49. Fuel Feed Tester:
1 — glass tube; 2 — revolving tube; 3 — tube from HPFP; 4 — washer; 5 — union nut

shaft when it rotates clockwise as viewed from the drive end. If the angle of turn at which fuel-feed is initiated by the eighth section is considered conditionally of 0°, other sections should deliver fuel in the following sequence (in degrees of the camshaft revolution): eighth section — 0, fourth — 45, fifth — 90, seventh — 135, third — 180, sixth — 225, second — 270, first — 315.

Inaccuracy of the interval between the initial fuel-feed by any of the pump sections relative to the eighth section is allowed for 20′, maximum.

The initial fuel-feed can be adjusted by placing push-rod pivots of definite thickness under the plunger. A thicker pivot attributes to an advanced feed, a thinner one to a retarded feed.

For checking and adjusting the pump for delivery and uniformity of fuel feed, proceed in the following sequence of operations.

1. Check the fuel pressure in the main line and at the HPFP intake. The pressure must be within 50—100 kPa (0.5—1.0 kgf/cm²) at 1300 min⁻¹ of the camshaft speed.

If the pressure exceeds or is below this value, screw out the by-pass valve 7 (see Fig. 40) plug and readjust the pressure using shims.

2. Test delivery valves for tightness. With the racks corresponding to the switch-on feed and plugged hole of by-pass valve, the delivery valves should not pass fuel at a pressure of about 170—200 kPa (1.7—2.0 kgf/cm²) during two minutes. In leaks are seen, replace the faulty valve.

3. If control lever 2 (see Fig. 42) thrusts against maximum speed limiting bolt 1, check the pump camshaft revolutions which must correspond to initiation of throw-out of the rack. The governor must start throwing out the rack at camshaft speed of 1335—1375 min⁻¹. Otherwise, readjust using bolt 1.

For checking, screw out plug 9 (see Fig. 40) at the right side relative to the drive end. Holding the rack with fingers, determine the initial moment of throw-out of the rack sensing the force on part of the rack.

4. If governor control lever 2 (see Fig. 42) thrusts against bolt 1, and when the camshaft revolves at (1300±10) min⁻¹, check and, if need be, readjust the mean cyclic feed; it must be about 72.0—75.5 mm³/cycle.

Fuel-feed delivery of each pump section could be adjusted by turning the section casing relative to the pump case in this or that direction; for this purpose, slacken the high-pressure tube nut and section flange fastening nuts (if need be, reset the union locking washer through one or two teeth).

When the section is turned counter-clockwise (Fig. 50), the cyclic feed increases, clockwise — decreases. On adjusting, tighten the section fastening nuts and also the high-pressure tube fastening nut.

5. Check and readjust, if need be, the fuel feed shut off through injectors when governor control lever 2 (see Fig. 42) rests against bolt 3. Check that the fuel feed is shut off at about 330—400 min⁻¹. When readjusting, use bolt 3.

6. Test the fuel feed shut-off through injectors when the governor control lever thrusts against bolt 1 at 1490—1555 min⁻¹ camshaft speed. No fuel can be supplied.

7. Test the fuel feed shut-off by stop lever 7. Check that the fuel feed is shut off at any speed of the camshaft when the lever is turned till it thrusts against bolt 8 for all injectors of the pump sections. If need be, readjust using bolt 8, then check the reserve of travel of the racks towards the shut off side, which must be 1 mm minimum when the stop lever thrusts against bolt 8.

On readjusting, lock the bolt with the nut.

8. When governor control lever 2 thrusts against bolt 1 and lever 7 thrusts against bolt 6 at the HPFP camshaft speed of 100 min⁻¹, test the start feed value, which must be within 195—210 mm³/cycle. For readjusting, use bolt 6. If the bolt is screwed in, the

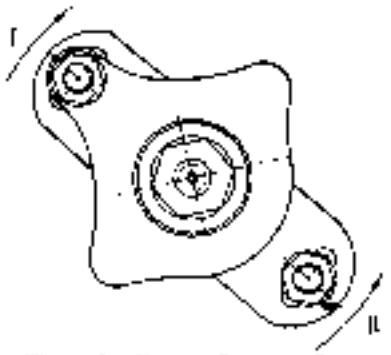

Fig. 50. Pump Section Turning Diagram:
I — fuel feed decrease; II — fuel feed increase

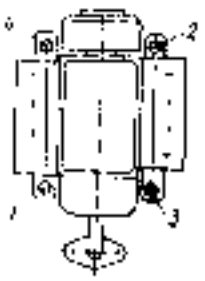

Fig. 51. HPFP Bolts Tightening Pattern

fuel feed decreases, if screwed out — increases. On readjusting, lock the bolt reliably.

When mounting the HPFP on the engine, to avoid skewing and breaking of the drive, tighten the pump fastening bolts evenly in several attempts in the order of increasing numbers as shown in Fig. 51.

Checking and setting the fuel-injection advance angle. For checking the fuel injection advance angle, crank the camshaft in the position wherein mark *B* (Fig. 52) on the advance fuel-injection automatically-operated coupling is at the top, and the lock backed with the spring (after the lock lever is shifted in the

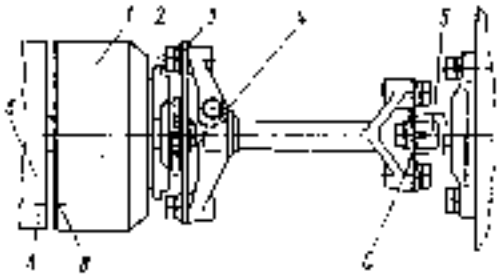

Fig. 52. Fuel Equipment Setting Marks:

C — advance fuel-injection automatically-operated coupling; 2 — driven coupling member; 3 — driving coupling member flange; 4 — HPFP; 5 — driving coupling member rear flange; 6 — HPFP; *A*, *B*, *C* — marks

deep slot) enters the set on the flywheel. If the marks on the fuel pump case and on the automatically-operated coupling come aligned at this moment, the fuel feed advance angle has been set correctly: **shift the lock in the shallow slot.**

If the marks could not be matched, set the fuel-injection advance angle in the following sequence of operations:

— slacken two bolts on the driven coupling member and turn the advance fuel-injection coupling counter-clockwise until the bolts thrust against slot walls (right-hand rotation of coupling as viewed from the drive side);

— turn the lock lever and place it in the deep slot on the lock casing;

— crank the crankshaft clockwise (as viewed from the fan side) until mark *C* on the fuel pump drive driving coupling member is at top. Check that the lock enters the hole drilled in the flywheel;

holding at the driven coupling member flange, slowly turn the advance fuel injection coupling in the sense of rotation of the HPFP drive, and match the marks on the fuel pump case and on the advance automatically-operated coupling. Tighten the bracing bolts on the drive coupling member and **reset the lock in the shallow slot.**

If the HPFP was dismantled off the engine, for readjusting the fuel-injection advance angle, proceed as follows:

— crank the crankshaft until mark *C* is at the top. Check that the lock enters the slot in the flywheel;

— mount the HPFP on the engine and secure it, match the marks on the pump case and on the advance fuel-injection coupling;

— carefully, without disturbing the mark position, tighten the upper bracing bolt on the drive coupling member, **reset the lock in the shallow slot**, crank the crankshaft through one turn and tighten the second bracing bolt.

Test that the fuel-injection advance angle has been set correctly, as described above. On completing the setting procedure, start the engine and, using bolt *3* (see Fig. 42), readjust the minimum speed at idling, which must be 600 min^{-1}, maximum.

Cold Engine Starting System

Glow-plug preheater (Fig. 53) is designed for marking it easier to start a cold engine at an ambient temperature down to minus 20 °C. The device is connected with the engine fuel system and is supplied with the same fuel. It operates on evaporation of fuel through sprayers of glow plugs, mixing of these fumes with air and ignition. The ignited flame warms the air supplied in the cylinders.

The electric circuitry of the preheater includes

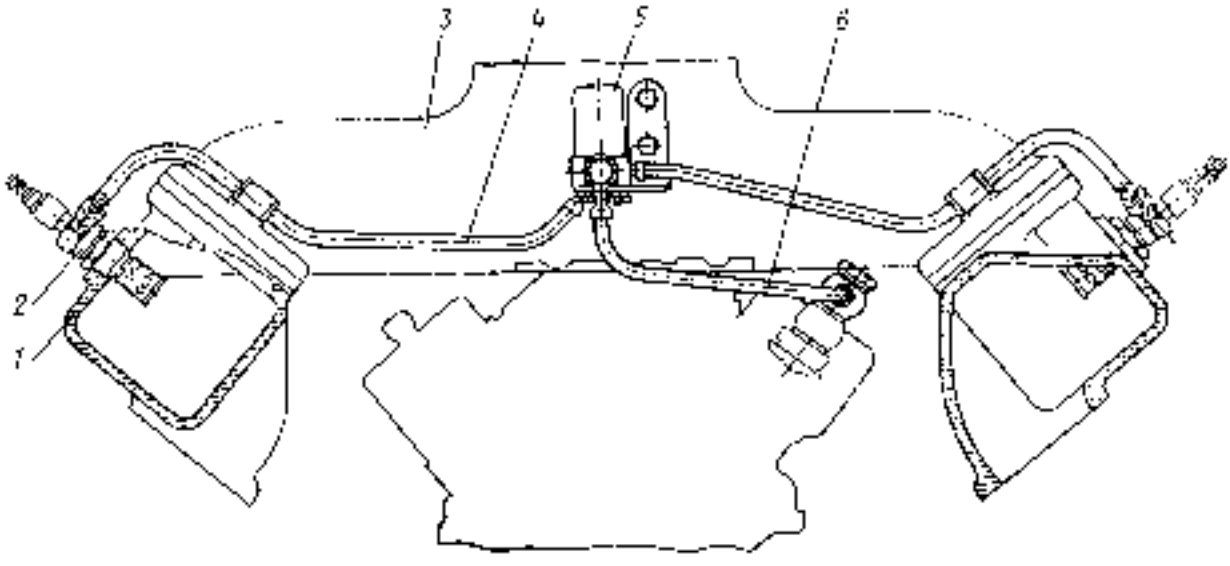

Fig. 53. Glow Plug Preheater:

1 — intake manifold; 2 — glow plugs; 3 — connecting sleeve; 4 — fuel tube; 5 — solenoid valve; 6 — fuel line from HPFP

(see Fig. 117): button *48* and pilot lamp *77*, two glow plugs *9*, solenoid valve *8*, additional resistor *29* with electrothermal relay, glow plug switching-off relay *28*. Preheater switching on button and pilot

lamp are located on the instrument board (see items *16* and *8* in Figs 14 and 15).

When the glow-plug preheater is energized, current flows through the added resistor to glow plugs and heats them. After 1 or 2 min resistor electrothermal relay contacts close, pilot lamp *8* (see Fig. 15) glows and solenoid valve operates, so opening an access of fuel to glow plug sprayers.

When the starter is pressed, added resistor electrothermal relay contacts are shorted out and full voltage is supplied to the glow plugs from the storage battery.

The starter cranks the engine crankshaft so ensuring fuel feed from the fuel pump through the open solenoid valve to red-hot plugs *2* (see Fig. 53).

The flame formed in the intake manifold warms air supplied therein, so facilitating the engine start-up.

After the engine is started and the starter is released, the driver could maintain the flame for some time in the intake manifolds holding button *16* (see Fig. 14) depressed on the instrument board.

Service condition of the glow-plug preheater should be checked if the storage battery has been discharged for not more than 25 %. When checking it on the truck, two repairmen should assist. Sequence of operations:

1. Test pilot lamp *8* (see Fig. 15) of the glow-plug preheater.

2. Switch on the device and check the current consumed by the plugs with reference to the current indicator pointer. If the pointer indicates against mark «30», the plug heaters are in good condition. At the same time determine the time duration from the device switch-on moment to that when the pilot lamp lights. For the first switch-on this time must be at positive ambient temperature 50—70 s and at negative 70—110 s. For the second switch on of the preheater the time duration up to the moment when the pilot lamp glows could be reduced; therefore, for obtaining the real value, let the electrothermal relay cool down to the ambient temperature.

3. Check that flame is seen in the intake pipes. For this purpose, remove the air cleaner cover and pick out the filtering element, switch on the glow-plug preheater and, as the pilot lamp lights, start the starter. Check that flame is seen through the connecting branch hole; it indicates that the glow-plug preheater operates correctly.

At an ambient temperature of minus 5 °C or higher, and if the engine is still warm, pull out the engine stop knob till it goes (for precluding a flame-out at high speed of the engine crankshaft rotation).

4. If no flame is seen, check the glow-plug preheater fuel system for tightness and the glow plug for fuel pass capacity. For checking the tightness of the fuel system, turn out the fuel pipe from the glow plug and pump it through using the fuel-feed hand pump. After approximately one minute open the solenoid valve supplying voltage to the valve plug after connecting one end of the conductor to terminal «+» of the generator and the second end to the valve plug. In this case the storage battery must be switched on. When the valve opens, it is accompanied by a characteristic click indicating that the valve operates correctly. If the fuel system is tight fuel starts jetting out of the disconnected fuel pipe.

5. Test the voltage regulator switch-off relay. For this purpose:

switch on the glow-plug preheater and start the engine, check that the current indicator pointer shows the discharging current value against mark «30» when the engine crankshaft speed is changed within the full range;

— stop the engine and only now release the glow-plug preheater button.

Start the engine again, without the glow-plug preheater and check that the generator operates for supplying the charging current.

6. Test the glow plug switch-on relay that shunts the added resistor electric thermal relay when the starter is on. For this purpose:

disconnect any of the conductors from terminal *K* of starter switch-on relay *37* (see Fig. 217);

— switch on the glow-plug preheater and turn the starter and instruments key in two or three attempts into the right-hand extreme position. Characteristic clicks are sensed if the relay is correct;

— switch off the glow-plug preheater and connect the conductor to terminal *K*.

7. If necessary, determine the fuel pass capacity and the current consumed by the glow plug.

Starting preheater is designed for warming the truck engine at the negative ambient temperatures.

The engine preheater system comprises:

boiler *20* (Fig. 54) mounted on the truck frame first cross-member;

— pumping unit *8* (electric motor, fan, fluid and fuel pumps) mounted on the truck frame right side member;

— fuel tank *13* with cock *12*,

— high-voltage source and plug *16*,

— preheater control panel that comprises switches: fuel electric heater switch *1* (Fig. 56), plugs switch *4*, pumping unit switch *3* and solenoid valve switch *2*. The panel is mounted on the cooling system radiator left side;

pipes:

— oil warming branch.

The removable burner is bolted to the boiler. The burner has plug *16* (see Fig. 54), solenoid valve *17* in assembly with an injector and fuel electric heater *18*.

The solenoid valve cuts in and cut the fuel feed to the burner.

The injector fitted in the solenoid valve body sprays fuel required for combustion.

The electric heater is used for warming the fuel portion before the preheater is started.

The electric spark firing system ensures inflammation of the fuel and air mixture during the start-up period.

The fuel tank contains the fuel stock required for operating the preheater. It is connected through the pipes with the engine fuel system and the tank is filled always when the engine runs. If need be, it may be filled with fuel with the help of the engine fuel feed hand pump.

The preheater operates as follows: the fuel pump takes in fuel out of the preheater tank and infeeds it under pressure, with the solenoid valve opened, through the injector to the burner whereat the atomized fuel is mixed with air, gets ignited and burnt, heating the fluid contained in the boiler.

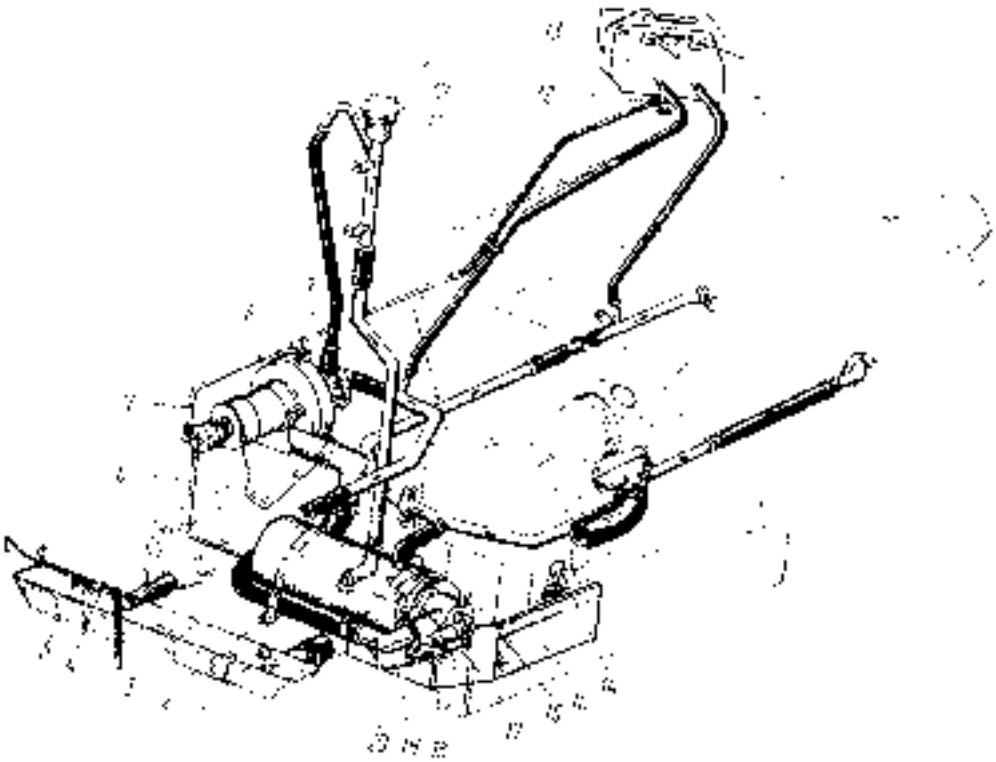

Fig. 54. Engine Starting Preheater System

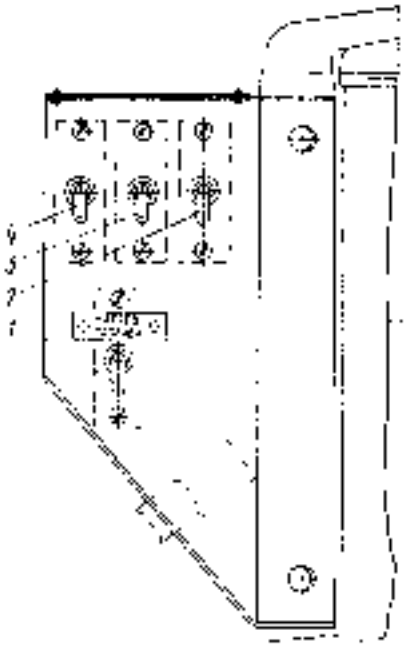

Fig. 55. Starting Preheater Control Panel

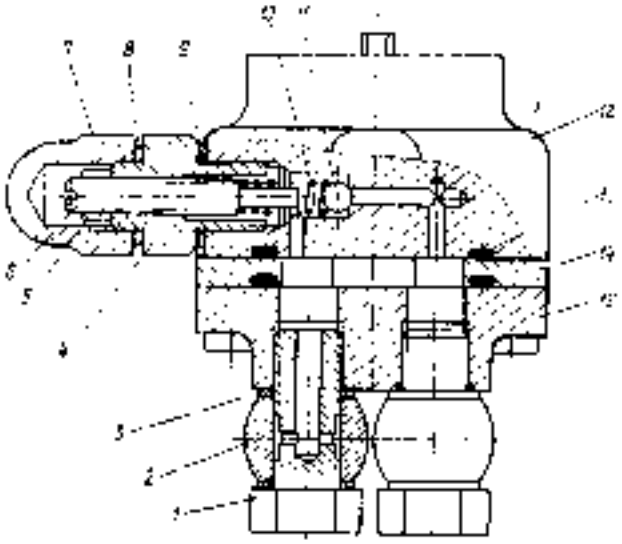

Fig. 56. Fuel Pump Relieving Valve

The fluid is forced by the pump through the pipes, cylinder block and radiator bottom tank in the direction shown by arrows in Fig. 54.

Combustion products are directed via the boiler gas exhaust branch under the engine oil crankcase for warming the oil.

The fuel is cleaned flowing through the filters provided in the solenoid valve and injector.

Servicing the starting preheater. Remember that infringing of the rules for operation, and also operation of the faulty preheater could cause fire. Check that no coolant or fuel leaks through the joints of the pipes, hoses and cocks; check that clamps and clips are tight on the branch pipes of the preheater boiler and pipes.

Do not fill water in the preheater boiler if it has been overheated (due to lack of the fluid) so as not to damage it; before filling with water, cool down the preheater boiler. After the truck has been washed or after the truck has crossed a ford, the water entrapped should be drained in the preheater air duct by switching on of the pump unit for 2—3 min. Check that the preheater fuel pump is adjusted correctly.

When preparing the truck for winter service, do the following:

- unscrew the transport plug from the drain hole available on the bottom end face of the fuel pump. When returning to summer conditions of operation, re-install the plug;

open the cock of the preheater fuel tank and leave it in this position throughout the winter period of service. When returning to summer conditions of operation, close the fuel cock;

check the boiler and the pump unit for proper fastening, clean all the instruments of soiling. Check the wires for good condition and the preheater control panel for proper fastening. Clean the boiler gas duct and combustion chamber, for which purpose disconnect the air supply hose and blow through the boiler, the combustion chamber and the gas duct with compressed air. Clean the drain pipe of the preheater boiler burner so as to prevent accumulation of fuel;

— remove carbon deposit from the spark plug electrode and insulator. Disassemble the injector. Wash the injector and its fuel filter and also the solenoid valve fuel filter in kerosene or acetone;

— check the preheater fuel pump for correct adjustment. The optimum fuel feed to the combustion chamber is determined in service by steady operation of the preheater if no flame is thrown out of the boiler.

Fuel consumption may be adjusted by the fuel pump reducing valve (Fig. 56). For changing the quantity of the fuel supplied through the injector to the preheater, screw out cap nut 7 on the fuel pump, unlock adjusting screw 6 and turn it clockwise for increasing and counter-clockwise, for decreasing the fuel quantity supplied. Do not operate the preheater if flame is seen at the outlet. On completion of the adjustment, lock the adjusting screw with locknut 5 and screw on cap nut 7.

Gas Exhaust System and Ejection

Exhaust system is designed for letting-out of waste gases and muffling of exhaust noise.

Front ends of intake pipes are connected through gaskets 6 (Fig. 57) with outlet manifolds, and rear ends, via compensators 14 with muffler 15.

Gas branch pipe 1 is welded to the left-hand pipe. The left- and right-hand intake pipes are inter-connected by clips which guard these against vibration.

Muffler 15 is locked rigidly on the frame by clips. Mounting and operating displacements of intake pipes with respect to the muffler are taken up by compensators 14. Since axes of the compensators are arranged in the same plane, they will operate reliably. This could be done by turning the muffler. Outlet pipe 17 is connected with the muffler by a clip and an U-bolt.

The compensator joint is shown in Fig. 58.

For cleaning the compensator joint:

— slacken the muffler fastening clips;

- undo the nut and remove the bolt that fastens the exhaust pipe to the bracket;

– shift the muffler backward, remove the compensators, clean working surfaces of the compensator cups from carbon and soot, grind notches and dents;

— remove packing rings from the intake pipes and muffler, clean the rings, grooves and the outer surface of the spherical mount.

Reassemble the compensators in the reverse sequence of operation. Fit two rings in each groove, checking that ring ends are placed on opposite sides of the pipe.

Layout of packing ring ends in the spherical mount groove must correspond to Fig. 59. If the joint tightness could not be obtained by cleaning the compensator assembly, replace the packing rings.

Ejection is introduced for removing dust from the engine air filter first stage.

The ejection system comprises an ejector, front 21 (see Fig. 57) and rear 19 pipes, shutter 8 used for cutting off the ejection. The ejector with a flange for mounting of fording valve 16 is welded on the end of outlet pipe 17. Ejection pipes are secured on the frame. The ejection cut-off shutter is secured on the air filter branch.

For fording or using a special truck-mount set, cut off the ejection so as to guard the filtering element against gnawing. For this purpose set shutter lever 11 in square to the pipe axis. When the lever is shifted through its neutral position, the shutter must close tightly as backed by the spring.

In all other cases the shutter must be held open (the lever is in the position parallel to the pipe).

For crossing a ford, connect the fording valve on the ejector flange. If the engine stalls in water, the fording valve shutter closes automatically, so sealing the intake system interior. The fording valve should be transported and stowed in the right-hand tool case under the truck bed.

Cooling System

The engine cooling system is of enclosed liquid type with forced circulation of the coolant intended for use of low-freezing cooling fluids (Fig. 60).

At an air temperature of up to minus 40 °C make use of coolant ОЖ-40 «Лена» and coolants grade 40 or ТОСОЛ-А40М. At a temperature of 20 °C the density of coolant ОЖ-40 «Лена» should be 1.075—

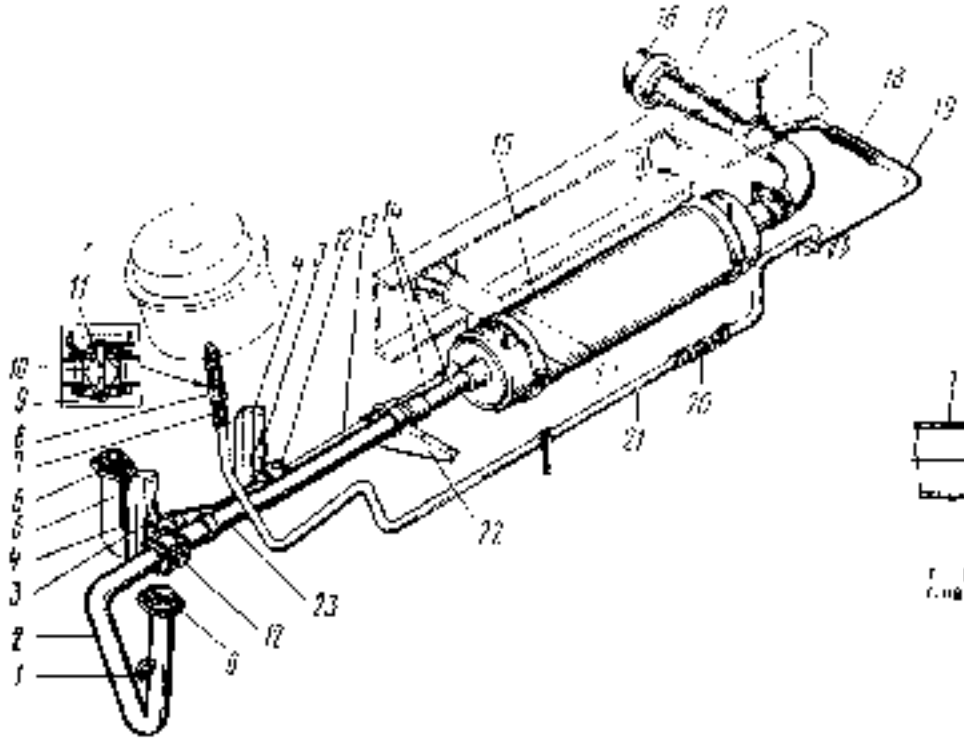

Fig. 57. Gas Exhaust System and Ejection

1 — gas branch pipe, 2, 5, 18, 20 — muffler intake pipe; 3 — air cylinder; 4 — bracket; 6 — gasket; 7, 19, 21 — hoses; 8 — ejector cut-off shutter; 9 — shutter case; 10 — shutter; 11 — shutter lever; 12 — auxiliary brake; 14 — compensators; 15 — muffler; 16 — inlet valve; 17 — outlet pipe; 19, 21 — ejection pipes; 22 — inlet pipe bracket

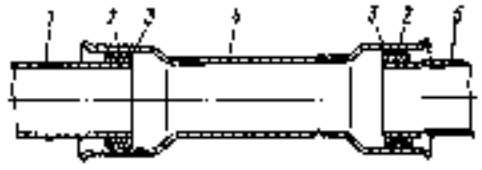

Fig. 58. Compensator Joint.

1 — intake pipe, 2 — packing ring, 3 — packing ring mount; 4 — compensator; 5 — muffler intake pipe

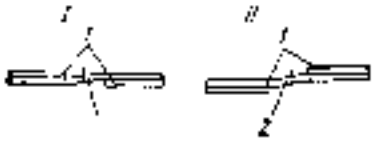

Fig. 59. Layout of Packing Ring Ends in Mount Groove

1 — packing ring ends; 2 — ring cross section; I — correct; II — incorrect

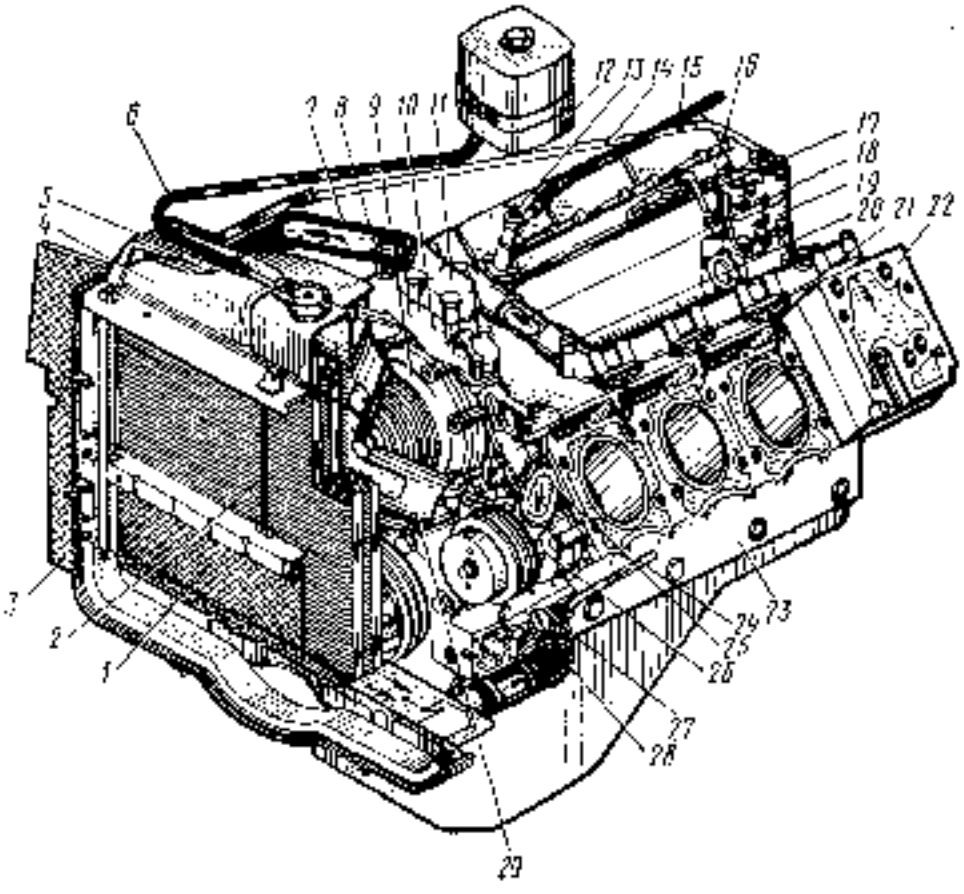

Fig. 60. Cooling System:

1 — radiator shutter, 2 — shutter drive cable, 3 — screen, 4 — radiator; 5 — radiator plug, 6, 7, 12, 28 — hoses; 8 — water thermometer pickup; 9 — fan drive hydraulic coupling; 10 — water jacket; 11 — water jacket branch, 13 — expansion tank; 14 — heater valve; 24 — compressor outlet pipe, 16, 21 — right- and left-hand water pipes, 17 — compressor fluid feed pipe; 18 — water connecting pipe, 19 — compressor; 20 — water temperature pickup; 22 — cylinder head; 23 — cylinder block, 24 — pressure heater; 25 — by-pass pipe branch; 26 — water pump, 27 — water-feed branch; 29 — fan

1.085 g/cm³, that of grade 40, 1.067—1.072 g/cm³, while the density of TOCOЛ-A40M should be 1.078—1.085 g/cm³.

At an air temperature of minus 40 °C and below, make use of coolant ОЖ-65 «Лена» or coolant grade 65 or TOCOЛ-A65M. At a temperature of 20 °C the density of coolant ОЖ-65 «Лена» should be 1.085—1.100 g/cm³, that of grade 65, 1.085—1.090 g/cm³, while the density of TOCOЛ-A65M, 1.085—1.095 g/cm³.

Water may be used if the coolant is lost unexpectedly.

In the cooling system the coolant temperature must be within 80—100 °C.

The desired thermal condition for the engine is ensured by two thermostats, fan drive hydraulic coupling and radiator shutter.

Water pump (Fig. 61) of centrifugal type ensures constant circulation of the coolant through the cooling system. Collar *14* and gland *13* guard the coolant against flowing into the bearing chamber. Thrust ring *9* is pressed permanently to the gland graphite ring *12*; rubber packing ring *11* with outer case is placed between the thrust ring and impeller. The coolant that seeps occasionally through the packing then flows out through the draining hole provided in the pump case. Noticeable coolant dripping through the hole indicates that the packing is deranged. If the hole is clogged, this may cause breakdown of the bearings.

Fan with five blades is mounted on the hydraulic coupling driven shaft at the top of the engine, driven via the hydraulic coupling by belts from the crankshaft pulley. The fan runs inside the housing which contributes to an increase of velocity of the air flowing through the radiator.

Fan drive hydraulic coupling (Fig. 62) is designed for transmitting torque from the crankshaft to the fan and also for guarding the belt drive and fan proper against overloads if the crankshaft speed is changed abruptly.

The fan speed depends on the quantity of oil supplied to the hydraulic coupling through the engaging unit (Fig. 63). The latter is mounted in front of the engine on the branch through which coolant is supplied to the right-hand row of cylinders.

Through tie *5* lever *6* of plug *9* could be set in three positions marked on the unit casing:

— position *O* (extreme left) – the fan is switched off irrespective of the coolant temperature;

— position *П* (middle) – the fan is switched on continuously irrespective of the coolant temperature;

— position *A* (extreme right) – the fan runs automatically (main duty).

As the coolant temperature rises up to 85—90 °C, rod *12* of thermal-strain valve *11* shifts ball *10*. Through the engaging unit communicating chambers, oil is supplied to the hydraulic coupling chamber. Then the oil flows through the interblade space so actuating the fan; from the wheel working chambers the oil is drained through the holes provided in the housing.

As the coolant temperature drops below 85 °C, ball *10*, being backed by return spring *8*, overlaps the hole in valve *11* so switching off the fan. Thus, the engine temperature is maintained to the best advantage and power consumed for driving the fan is reduced.

If the hydraulic coupling engaging unit fails to operate automatically (if the engine overheats), start the fan running by resetting lever *6* of plug *9* in position *П* and repair as soon as possible.

Radiator is of the tube plate four row type. The radiator upper tank has a tight plug on the filler, having two valves. The exhaust valve operates at an excess pressure in the system of 65 kPa (0.65 kgf/cm²) for bleeding excessive water and vapour into the expansion tank; the intake valve operates at 1—12 kPa (0.01—0.12 kgf/cm²) for letting in water from the tank to the radiator.

Protective baffles are provided on the radiator frame side walls, used for preventing overflow of heated air out of the underhood space to the intake of the radiator.

If the radiator core is clogged considerably, clean out using compressed air directing from the fan housing side.

Radiator shutter controllable from the driver's cab is intended for adjusting the radiator blow-over intensity. When servicing or operating the truck, see to it that no fuel, oil or lubricant gets on to the shutter sheet.

Thermostats filled with solid agent are designed for controlling automatically the engine thermal operating conditions.

The thermostats are housed in water jacket *10* (see Fig. 60) secured on the fan hydraulic coupling case. For design of the thermostat refer to Fig. 64.

When a cold engine is warmed, the branch that connects the block water chambers with the radiator is shut off by valves *5* of the thermostats, and the by-pass duct to the water pump is opened by valves *10*. Coolant circulates escaping the radiator so facilitating the warm-up of the engine. As the coolant temperature rises to (80±2) °C, valve *5* opens and valve *10* closes. The coolant starts circulating through the radiator.

Expansion tank made of plastic material is mounted on the truck cab right-hand side bracket and is connected via pipes with the radiator upper tank filler.

The expansion tank serves for compensating the coolant volume which is changed when the fluid expands due to heating.

Check of coolant temperatures in the cooling system has to be made by the respective indicator mounted on the instrument board. The indicator pickup is fitted in the thermostat water jacket right hand branch.

As the temperature in the cooling system rises to 100 °C, the coolant temperature alarm rise pilot lamp *2* (see Fig. 15) glows so warning that it is necessary to find the engine overheating cause and repair.

If this lamp glows still, in exceptional cases, it is allowed however to continue driving, watching carefully readings of the coolant temperature indicator.

A short-time temperature rise of about 2 h. is allowed up to 105 °C.

Adjusting of the belts tension (Fig. 65). Trouble-free operation of the water pump, generator, fan drive hydraulic coupling depends on reliable performance of the driving belts. Protect the belts from oil,

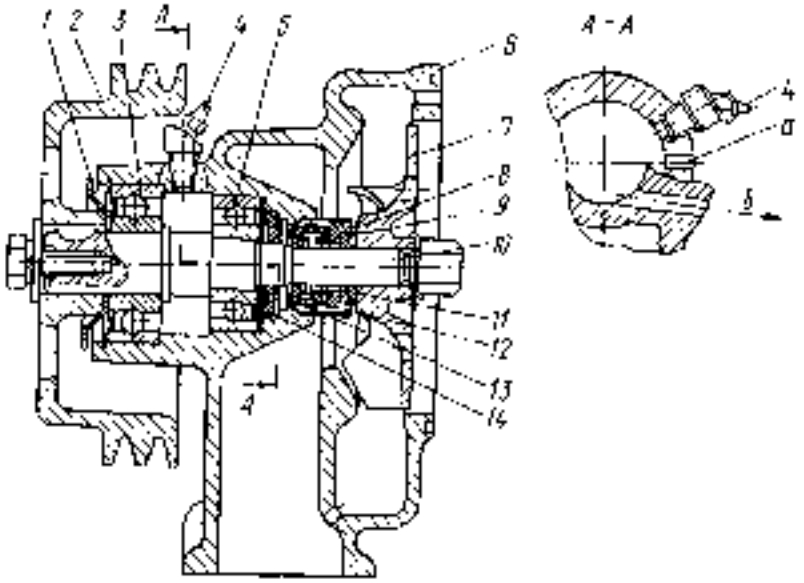

Fig. 61. Water Pump

1 — rotor; 2 — pulley; 3, 5 — ball bearings; 4 — lubricator; 6 — case; 7 — impeller; 8 — packing ring holder; 9 — thrust ring; 10 — shaft; 11 — packing ring; 12 — graphite ring; 13 — seal; 14 — collar; a — check hole; b — drain hole

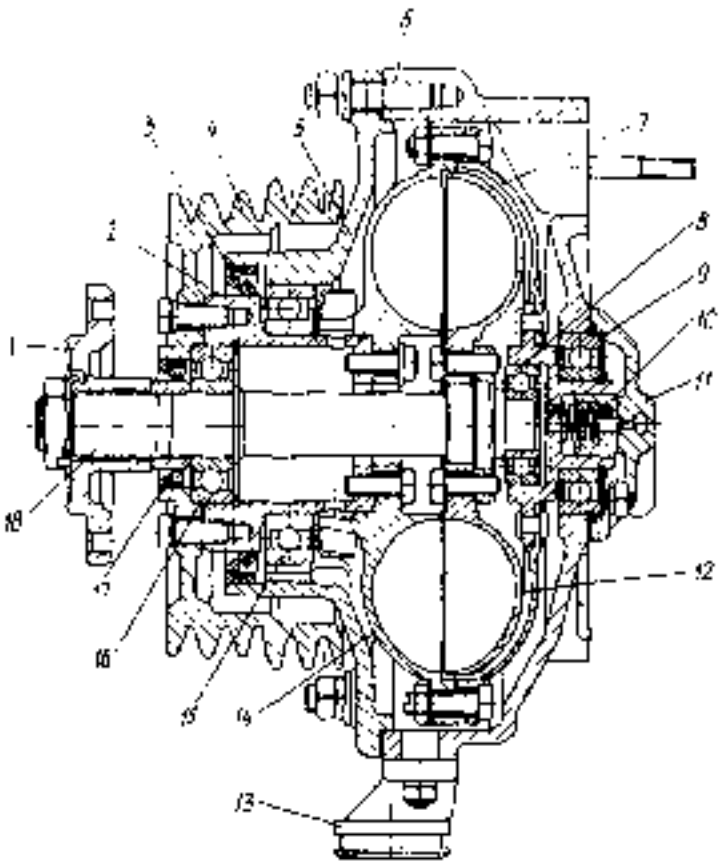

Fig. 62. Fan Drive Hydraulic Coupling

1 — fan hub; 2 — pulley shaft; 3, 12 — collars; 4 — pulley; 5 — bearing casing; 6 — casing bracket; 7 — driving wheel housing; 8, 13, 15 — ball bearings; 9 — thrust bearing; 10 — driving shaft packing; 11 — casing bracket cover; 14 — driven wheel; 16 — drain bracket; 17 — driving wheel; 18 — driven wheel shaft

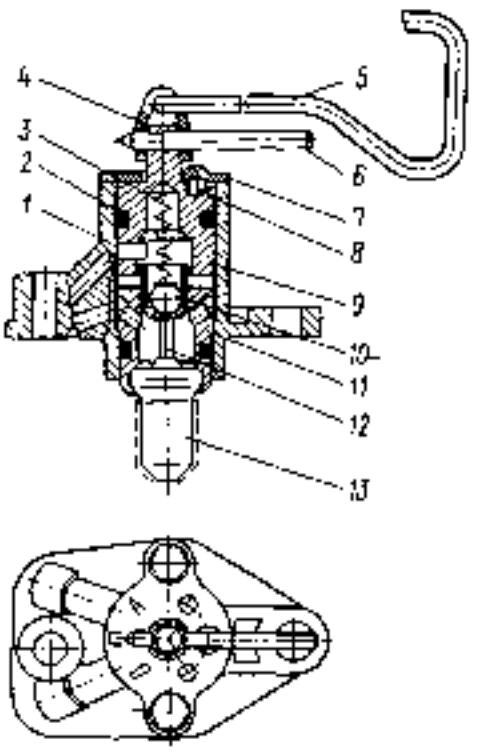

Fig. 63. Hydraulic Coupling Engaging Unit

1 — [illegible]; 2 — packing ring; 3 — spring; 4 — fork; 5 — [illegible]; 6 — plug; lever; 7 — cover; 8 — [illegible] ball; 9 — plug; 10 — ball; 11 — thermostatic valve; 12 — rod; 13 — thermostatic pick-up

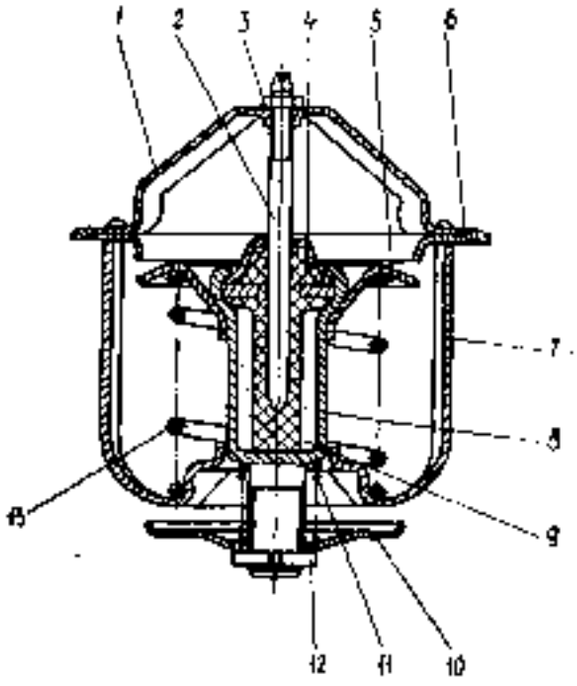

Fig. 64. Thermostat:
1, 2 — stays; 3 — rod; 4, 12 — adjusting nuts; 5 — rubber insert with washer; 6, 10 — valves; 7 — support; 8 — bottle; 9 — pellet (wax-filled cartridge); 11, 13 — springs

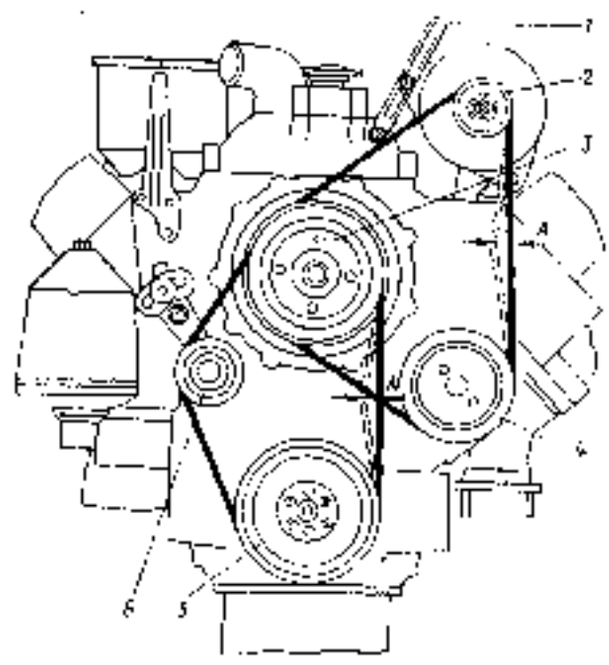

Fig. 65. Driving Belt Tension Check Diagram:
1 — generator strip; 2 — generator pulley; 3 — hydraulic coupling pulley; 4 — water pump pulley; 5 — crankshaft pulley; 6 — tensioning roller; A — 15 to 22 mm sag

fuel and check them for tensioning by pressing on the centre of a larger run with an effort of 40 N (4 kgf). The belts tensioned normally could sag at 15—22 mm. If a belt sags more or less than that specified, readjust it. On the water pump and generator the driving belts must be retensioned by shifting the generator relative to its fastening axis. On the hydraulic coupling the belts must be readjusted with the use of the tensioner available on the hydraulic coupling bracket casing. For readjusting, slacken the nut that fastens the lever to the bracket, fit a turning bar in the hole provided in the lever end and, turning the lever with the pulley about the axis, readjust the belts tensioning. On readjusting tighten the nut.

If any of the belts is broken, replace all of them. The latter should be of the same size group in length. The group number is marked on the belt with indelible paint.

Checking the low-freezing coolant level. Check the level of the coolant whose volume is changed due to different temperatures, on a cold engine.

Given in the Lubrication Chart is the level of the coolant when the temperature drops down to minus 50 °C, will ensure its availability in the radiator tank above the tube end faces.

The minimum level at any temperature should be not lower than the tube end faces, no bare tubes are tolerated.

Fill the cooling system of the cold engine with coolant through the radiator filler to the indicated level of the tank. When filling the system, check that preheater filling pipe plug and the heater cock are opened. Having filled the engine start up the engine for 1—2 min to let the air escape from the system.

On stopping the engine check again the level with the preheater filling plug opened, and add fluid to the indicated level, if necessary.

At priming put 23 g of sealing powder НИИСС-1 ТУ 38.10270—78 through the radiator filler.

In disassembling of any joint in the cooling system, add the powder, as required.

Check the water level in the cooling system on the cold engine. Fill the cooling system with water through the radiator filler with the preheater filling pipe plug and the cab heater cock opened.

In cold weather disconnect the connecting hose from the expansion tank and direct it downward, securing the clip under the fan housing fastening bolt. In warm weather do not disconnect the hose from the tank.

For draining the coolant out of the cooling system, place the truck on a flat ground, which may be inclined somewhat forward, and open the four cocks on the preheater boiler, on the preheater pump unit, on the radiator lower tank (see Fig. 54). Before draining remove the plugs from the radiator filler and preheater filling pipe.

For draining coolant out of the hose and expansion tank, lift the tank as required.

The volume of remaining coolant with the cab heater cock opened should be 1.2 ltr approximately.

If water was used in the cooling system, then:

— after draining water out of the cooling system and starting preheater, start the pump unit for 10—15 s to remove water from the pump so as to prevent frost-stocking of the impeller; on completing the drain, close all four drain cocks;

— after draining water out of the cooling system, do not put plugs on the radiator filler and on preheater filling pipe; otherwise, these may be frost-stucked.

Do not run the engine after draining of coolant with the purpose of removing the remaining fluid out of the system, since it may cause damage to cylinder liner rubber packing rings, lead to fall-out of valve seats, burn-out and warping of block head cylinders.

Power Unit Suspension

For damping of vibrations and oscillations which the running engine transmits to the frame and also for protecting the engine when the truck drives on a rough road, the power unit (i. e. the engine coupled with the clutch and gearbox) is secured to the frame through intermediate rubber pads placed in four points (two — for the front support and two — for the rear one).

As far as the rubber pads contract in the rear supports, a clearance is formed between cover *10* (Fig. 66) and cushion *10*. This clearance can be eliminated by removing of shims *12*.

POWER TRANSMISSION

Clutch

The truck has a dry, friction type, two-disk clutch with pressure rings disposed all around.

Pressure *5* (Fig. 67) and middle *2* driving disks have four prongs each on the outer surface, which enter special slots provided in flywheel *1* so transmitting torque from the engine to driven disks *3* whose hubs are fitted on the splines of the gearbox primary shaft.

Pressure springs *17* are placed between clutch housing *6* and pressure disk *5*. Under the action of these springs driven disks *3* and middle disk *2* are clamped between the pressure disk and flywheel *1* with the clutch engaged.

Middle driving disk *2* is provided with a leverage used for setting it in the middle position between flywheel *1* and pressure disk *5* with the clutch disengaged.

When the clutch is released, sleeve *13* actuates via thrust ring *15* the inner ends of levers *11*; pressure disk *5* goes apart from driven disk *3*. Middle disk *2*, resetting in the middle position between flywheel *1* and pressure disk *5*, being actuated by the leverage, sets free the second driven disk. Thus, the engine and transmission line are decoupled.

Clutch control. The mechanical clutch release control with air-type booster is mounted on the truck. The booster air cylinder *18* (Fig. 68) is installed on the gearbox case and affects lever *20* of clutch release fork shaft. The cylinder is controlled by air cock *5* available on tie *8*. Hose *6* connects air cock *5* with air system of the truck.

When acting on the clutch pedal *14* the effort is transmitted to lever *20* via lever *9* and control parts, simultaneously via the parts of tie *8* the effort is transmitted to air cock *5* and opening its valve. Air pressure from air system of the truck through hose *17* gets into cylinder *18* which, shifting lever *20* of fork shaft, gives servoaction in the clutch release control.

If there is no air pressure in the truck air system the clutch is controlled mechanically through the system of leverage and ties.

The adjustment of the air cock connection moment, if air pressure in the truck air system is available, is performed as follows:

— disconnect hose *17* from cock *5*;

— unscrew adjusting bolt *2* ensuring clearance between the bolt and rod;

— depress the clutch pedal *14* up to the limit;

— screw bolt *2* till the cock valve opens (air gets out the control pipeline of cock *5*);

— screw adjusting bolt *2* through 0.5—1.0 of a revolution and lock with nut *3*.

Peculiarities of dismantling and refitting the clutch. For dismantling the clutch from the engine, screw beforehand four M10×1.25×62 bracing bolts *5* (Fig. 69) in pressure disk *6* until they thrust against housing *7* then turn out the bolts which fasten the clutch housing to the flywheel.

When refitting the clutch on the engine, after screwing in of the bolts which fasten the housing to the flywheel, turn out the bracing bolts from the pressure disk.

Prior to mounting the pressure disk and the housing on the engine, check position of push-off lever *9* thrust ring *4*. For checking, set the pressure disk in assemble without bracing bolts on check support *10* or on the flywheel with an insert ensuring the setting size of $A = (29 \pm 0.1)$ mm. Size *B* must be (54 ± 0.3) mm, the runout of end face T_2 of thrust ring *1* relative to end face T_1 of pressure disk *8* 0.4 mm, maximum. If the thrust ring has been disturbed in position, readjust it on the fixture using nuts *9* and restore the size *B*. Do not attempt to readjust the ring on the truck.

When refitting the clutch, centre the driven disks relative to the crankshaft axis using a mandrel.

When connecting the gearbox to the engine align the primary shaft and front bearing axes.

Adjusting full and free strokes of the clutch pedal. The clutch pedal full stroke is 195 mm, minimum. If otherwise, re-adjust using the adjusting bolt of pedal stroke limiter *11* (see Fig. 68).

The clutch pedal free stroke should be within 50—60 mm. The clutch pedal free stroke is determined in the absence of air pressure by pressing the pedal by hand. The clutch release moment is sensed by a substantial increase in the counter-force.

The free stroke is adjusted by varying the length of tie *21*. To this end:

disconnect tie *21* from lever *20*;

— slacken the locknut of the tie fork and screw the fork out to increase the free stroke or screw the fork in to decrease this;

couple the tie and the lever and tighten the fork locknut;

— check the pedal for free stroke.

If the tie threaded length is insufficient, reset lever *20* through one slot. **Then take off the cover from the upper handhole in case 4 (see Fig. 67) and make sure that the legs of clutch release fork *14* bear up against the blocks of sleeve *13*. The bottom handhole may also be used for the purpose.**

Gearbox

The gearbox is of three-way design (Fig. 70) having five forward-speed gears and one reverse gear. All the gears of the gearbox, except for the first and reverse gears, are of level design. All the gears are constant-mesh ones.

Gears *24*, *30*, *31* and *36* of main shaft *69* run in needle bearings *27* having cages but no races. Gear *23* of the fifth gear runs on two rows of cageless rollers. Reserve *54*, first *53* and second *56* gears of layshaft *63* are made integral with the shaft. Other

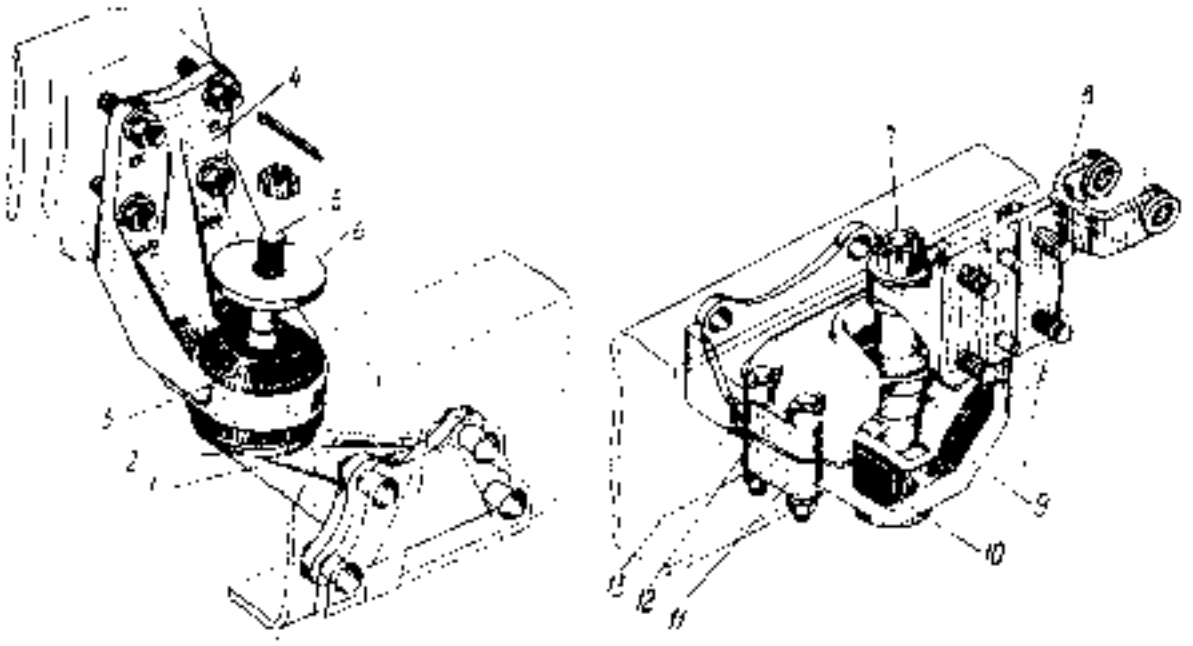

Fig. 66. Engine Suspension

1 — front support lower bracket; 2, 3 — lower and upper supporting washers; 4, 10 — cushions; 5 — front support upper bracket; 6 — front support bolt; 7 — grading bolt; 8 — rear support upper bracket; 9 — rear support stud; 11 — rear support lower bracket; 12 — [illegible]; 13 — [illegible]

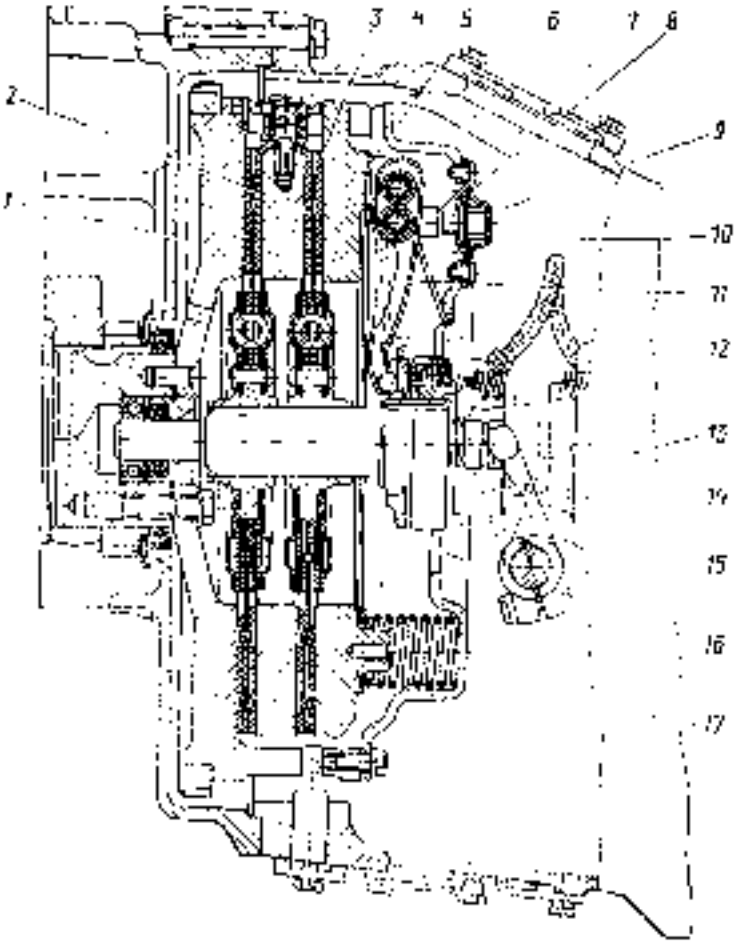

Fig. 67. Clutch

1 — flywheel; 2 — driving [illegible] disk; 3 — [illegible] disks; 4 — case; 5 — driving pressure disk; 6 — housing; 7 — [illegible] lever; 8 — [illegible]; 9 — link washer; 10 — adjusting nut; 11 — locking plate; 12 — pull-off [illegible]; 13 — [illegible] release sleeve [illegible]; 14 — clutch release sleeve; 15 — clutch release lever; 16 — pull-off lever; 17 — thrust ring; 18 — lever shaft; 19 — [illegible] spring; 20 — [illegible] fan of lever; 21 — with clutch engaged [illegible] position of fork; 22 — with fully disengaged clutch, lever travel of sleeve; 23 — lever takes [illegible] position; 24 — position of fork; 25 — with clutch engaged; and 26 — wear [illegible] fitting.

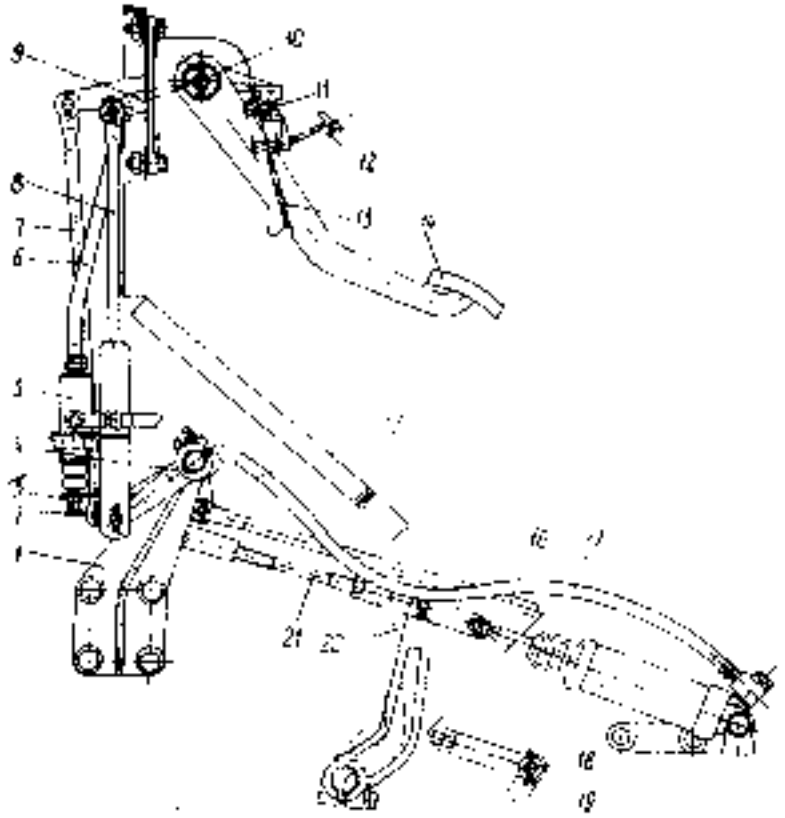

Fig. 68. Clutch and Brake Valve Controls

1 — [illegible]; 2 — adjusting bolt; 3 — locknut; 4 — clutch control lever; 5 — air [illegible]; 6, 17 — levers; 7 — brake pedal [illegible]; 8 — [illegible] with [illegible]; 9 — clutch pedal shaft lever; 10 — clutch pedal [illegible]; 11 — clutch pedal [illegible]; 12 — brake pedal pull-off spring; 13 — clutch pedal spring; 14 — clutch and brake pedals; 15, 19 — brake valve levers; 16, 22 — [illegible]; 18 — air cylinder; 21 — clutch release lock shaft lever

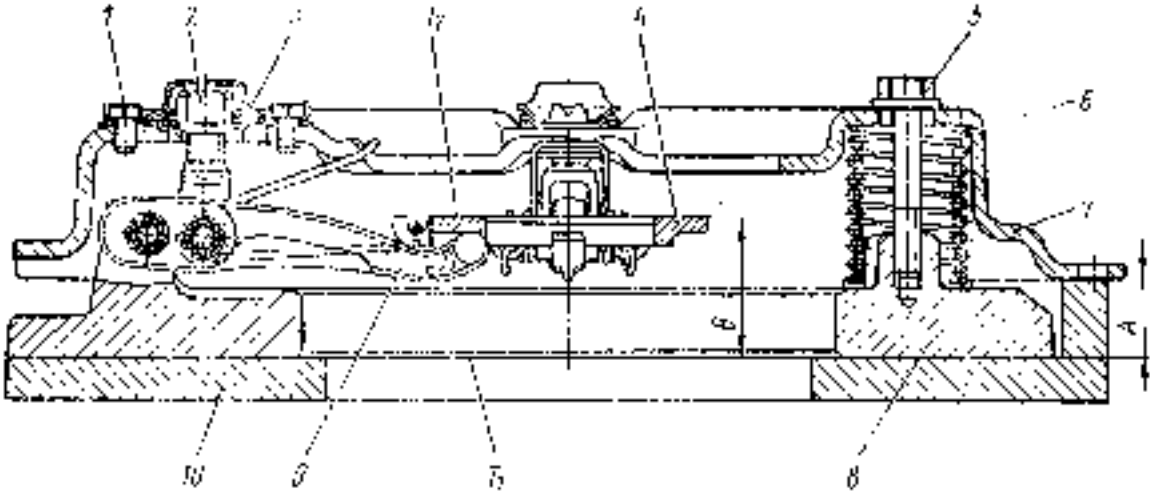

Fig. 69. Pressure Plate and Housing Assembly

1 — bolt; 2 — adjusting nut; 3 — locking plate; 4 — pull-off lever; thrust ring; 5 — retaining bolt; 6 — pressure spring; 7 — clutch housing; 8 — pressure disk; 9 — pushrod lever; 10 — check support

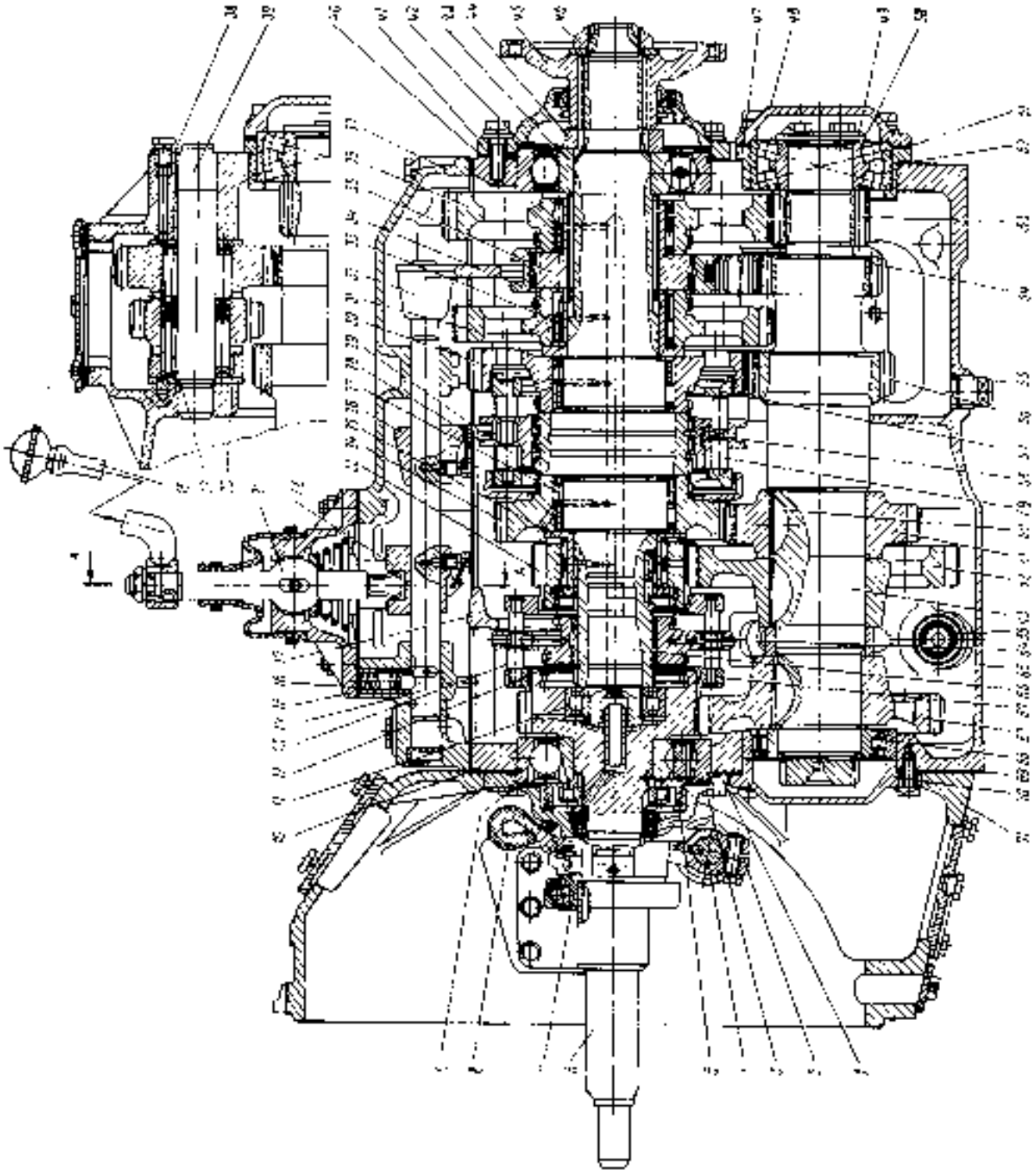

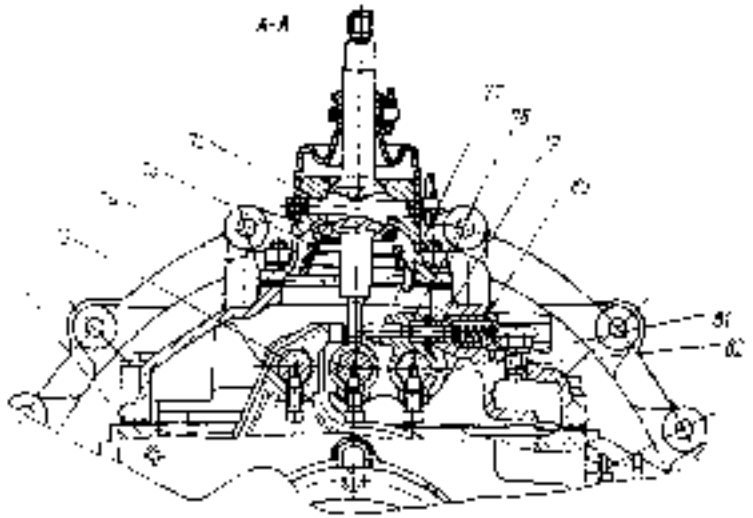

Fig. 71. Oil Level Measuring Dip Stick

1 — plug with oil level measuring dip stick; 2 — gearbox case

Fig. 70. Gearbox

1, 40, 42, 79 — bearing caps; 2 — clutch release fork shaft; 3 — oil pressure ring; 4 — primary shaft; 7 — clutch release spring; 8 — clutch release lever; 9, 42 — screws; 10, 46, 51, 52, 60, 73, 74 — packing rings; 11, 50, 68 — roller bearings; 12, 36 — synchromesh unit sliding sleeves; 13, 35 — synchromesh unit locking pins; 14 — gears II and III shift lever ring; 15 — shift lever spindle; 16 — oil bearing spring; 17 — gears IV and V shift forks; 18 — gear shift lever; 19, 27 — needle bearings; 20 — reverse gear cluster; 21 — shift lever end piece; 23 — gears II and III shift fork rod heads; 25 — main shaft drive gear V; 26 — main shaft drive gear III; 28, 31, 37 — main shaft needle; 30 — gears II and III shift lever; 33 — main shaft drive gear II; 34 — main shaft reverse gear; 38 — gears I and reverse shift fork; 44 — gears I and reverse toothed coupling; 45 — main shaft drive gear I; 47 — upper cover; 48 — reverse gear cluster pin lock; 49 — reverse gear cluster pin; 51 — distance bush; 54 — propeller shaft fastening flange; 55 — nut; 57 — bearing housing; 58 — lock washer; 59 — layshaft drive gear I; 60 — layshaft reverse gear; 65 — drain plug; 70 — layshaft drive gear II; 71 — synchromesh unit locking ring; 75, 76 — synchromesh unit bushes; 78 — lock nut; 80 — key; 81 — layshaft drive gear III; 82 — layshaft drive gear V; 83 — layshaft; 84 — gearbox case; 85 — main shaft; 87 — layshaft drive gear IV; 88 — cluster cover; 89 — gears IV and V shift fork rod; 91 — shift lever spring; 92 — shift lever pin; 93, 99 — gears I and reverse safety catches; 94 — gears I and reverse fork rod heads; 95 — safety catch spring; 97 — gears I and reverse fork rod; 98 — breather (for Ural-4320-42 trucks only)

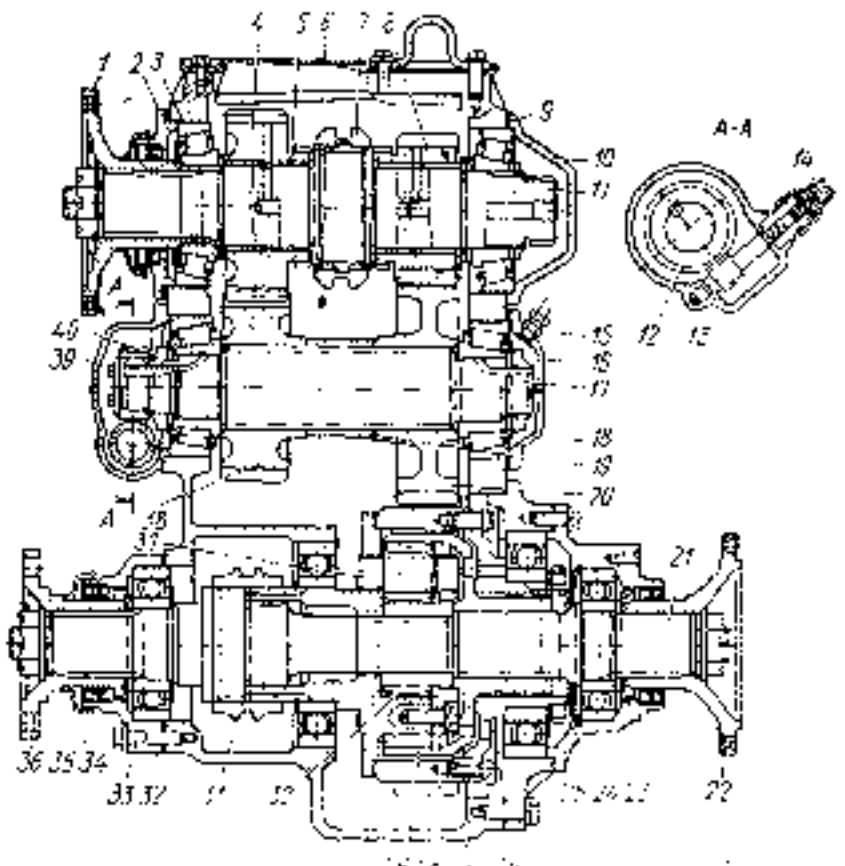

Fig. 79. Distributor Box:

1, 12, 18 — flanges; 2, 16, 36, 37, 42, 45 — bearing caps; 3, 14 — tapered roller bearings; 4, 15 — single-speed gears; 5 — bush; 6 — upper handhole cover; 7 — gear shift controlling; 8, 26 — low-speed gears; 9 — distributor box cover; 10 — primary shaft; 11, 13 — speedometer driving and driven gears; 14 — speedometer flexible shaft; 15 — sealing system union; 17 — bearing; 19 — distance bush; 21 — rear axle drive shaft; 22 — oil scraper ring; 24, 25 — bevel gear teeth; 26 — differential rear bearing case; 27 — differential rear bearing; 28 — differential pinion with bevel gear; 29 — crown gear; 30 — axle gear; 32 — differential interlocking coupling; 33 — belt; 34 — flange; 35 — selector; 36 — front axle drive shaft; 37 — spindle

gears *61*, *62* and *67* are press-fitted on the shaft mounted on Woodruff keys *69*. Reverse gear cluster *20* is mounted on pin *39* running in two needle bearings *19*. The first and reverse gears are meshed by means of toothed coupling *34*. The second, third, fourth and fifth gears are synchronized.

When this or that gear is meshed, chamfers on locking pins are pressed due to friction caused on tapered faces to corresponding chamfers on the sliding sleeve, thus obstructing the sleeve in shifting and the gear in meshing until speeds of the meshed gear and main shaft are equalized. On equalizing the speeds, the synchro-mesh unit is unlocked and the desired gear is meshed.

A ball-type lock is provided in the gearbox cover, used for precluding meshing of two gears simultaneously.

Spring-and-pin split-type safety catches *77* and *79*, arranged in the upper cover, are used for guarding against spontaneous engagement of the reverse gear.

Main shaft gear bearings are force-lubricated from a special oil-delivery device mounted on the primary shaft, the device comprises screw-thread ring *5* which receives oil flowing in a tray and through the ducts provided in case *65* and primary shaft bearing cap *1*.

Lubrication points are supplied with oil through the holes drilled in the primary and main shafts and in gear hubs.

The gearbox is filled with oil through a filler available in the case right-hand wall. The oil level dip stick is passed through the filler plug.

For checking the oil level, screw out plug *1* (Fig. 71) together with the dip stick and fill it in the hole till it bumps against the threading, as shown in the Figure. Check that the oil level is positioned to the top mark made on the dip stick.

Since a partition is provided inside the box case, it is necessary to drain oil through two holes with plugs *55* (see Fig. 70), first through the lower hole, then through the side one. When changing the oil, clean the front plug magnet from metal particles.

Distributor Box

Distributor box (Fig. 72) is a mechanical, two-stage unit, having a non-symmetrical inter-axle differential gear, mounted on the truck frame in four rubber pads.

The differential mechanism is of planetary type, having four satellites, sun *30* and crown *29* gears.

From sun gear *30* torque is transmitted to shaft *35* in the front axle drive, and from crown gear *29*, to rear axle drive shaft *21*.

If the differential mechanism is in operational (unlocked) condition, an equal traction of all the axles is ensured and extra stresses in the transmission line are neutralized. Depending on the road conditions the differential mechanism may be disengaged (locked) and the front and rear wheels drive shafts run all in step.

Oil scraper rings *23* are fitted on the drive shafts of the front and rear axles. These rings have on the outside screw-type grooves through which oil is directed from the collars to the case when the shafts run. Screw-type grooves are cut in opposite directions, that is, the left-hand for the front axle drive shaft and the right-hand for the rear axle drive shaft. Marks *11* and *3* are punched on the oil scraper rings for front and rear axles, respectively.

When reassembling the distributor box, check that the oil scraper rings are fitted correctly; otherwise, oil might leak through the collars.

The distributor boxes of Ural-4420-02, Ural-43202-02 or Ural-44202-02 trucks differ from that of the Ural-4320-02 truck by the gears of the speedometer drive.

Adjusting the distributor box and its control. Tapered bearings must be adjusted by shims placed under the caps after dismantling the box from the truck.

Before adjusting, set the box so that the upper handhole is positioned horizontally, then remove cover off it. Check that the primary shaft axial displacement is 0.15—0.20 mm and the layshaft, 0.08—0.13 mm. When adjusting, check displacement of the shafts using a clock-type indicator.

For adjusting the primary shaft bearings:

— fit the indicator on the case surface so that its foot thrusts against the spline end face in the middle portion of the primary shaft;

— using a tyre iron, crank the primary shaft via the gear until the indicator pointer stops still, slowly reduce axial force applied to the lever along the length of 0.5 m at about 2—5 N (0.2—0.5 kgf) and note down the indicator readings;

— applying a force axially in the reversed sense, similarly note down the indicator readings in this position.

Totally, the indicator pointer swing must be 0.15—0.20 mm in case of an overswing, remove the shims from under the bearing front cap.

For adjusting the layshaft bearings:

— remove the bearing rear cap on the layshaft;

— unlock and tighten the layshaft bearing fastening nut so that the gear distance bush is clamped;

— lock the nut and replace the cover;

— check the axial displacement of the layshaft in the similar manner as of the primary shaft; now, thrust the indicator foot against the end face of one of the gears; the indicator pointer swings totally at 0.08—0.13 mm;

— readjust the bearings removing the shims placed under the layshaft rear cover.

To avoid errors in measuring, check axial displacement of shafts before and after adjustment (two-three times), having first cranking the shafts.

Check and readjust, as required, the position of differential interlocking coupling and gear shift coupling. The position of differential interlocking coupling *31* should be adjusted by rotating the rod. When checking the position of the coupling, set the rod in the front fixed position and crank the front axle drive shaft by the flange. If the coupling is clear of the splined end of the differential front holder, it means that the coupling is installed correctly. If otherwise, shift the coupling forward, rotating the rod clockwise.

The position of gear shift coupling *7* should be adjusted by selecting the thickness of shims *11* pack (Fig. 73). The position of the coupling is considered normal, if, with the fixed neutral position of the gearshift fork rod, the difference of the free length of the primary shaft middle portion does not exceed 1 mm at both sides of the carriage.

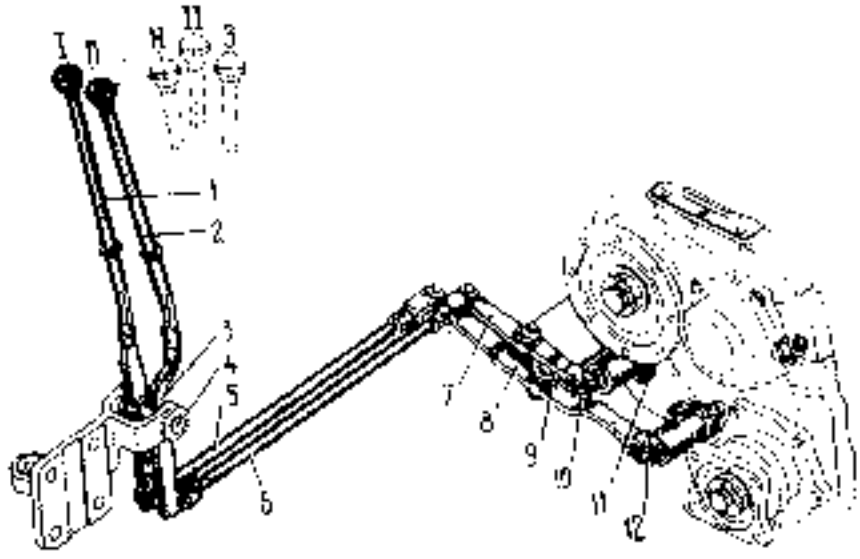

Fig. 70. Distributor Box Control

1 — differential distribution cover; 2 — gear shift lever; 3 — pressure spring; 4 — lever stem; 5 — [illegible]; 6 — [illegible]; 7 — gear shift fork rod; 8 — sleeve; 9 — distributor [illegible]; 10 — differential locking rod; 11 — differential [illegible]; 12 — differential locked; I — lever front position (high gear engaged); II — lever middle position (neutral); III — lever rear position (low speed gear engaged)

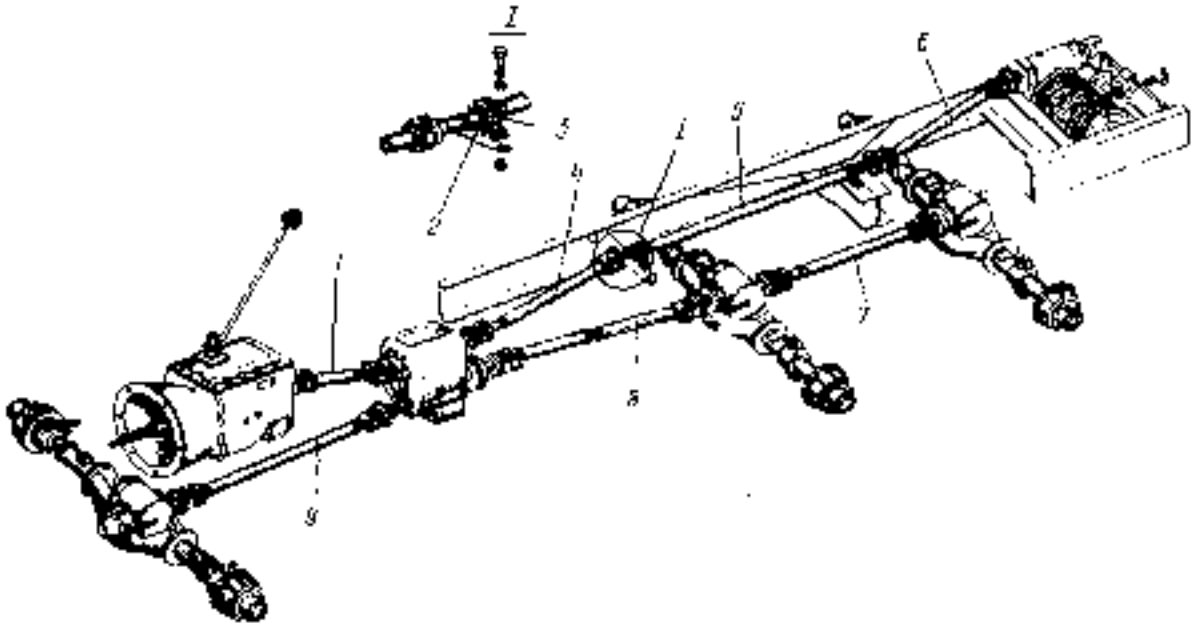

Fig. 71. Layout Diagram of Transmission and Winch Drive Propeller Shafts for Ural-4320-02 Truck

1 — intermediate propeller shaft; 2 — supporting plate; 3 — intermediate support; 4, 5, 6 — winch drive propeller shafts; 7, 8, 9 — axle drive propeller shafts

For adjusting the distributor box control, change the length of ties 5 and 9 (Fig. 73) using the adjusting forks so that lever 2 is in the middle of the cab floor slot when the rod is set in the middle position that corresponds to neutral position of the clutch. When shifting for a higher speed and if differential unit is unlocked, see that levers 1 and 2 are in the same plane. On completion of the adjustment, check the gears for easy shifting, lock the pins and screw home the fork locknuts.

Propeller Shaft Drive

Torque is transferred from the gearbox to the distribution box and to truck driving axles through propeller shafts (Fig. 74).

The propeller shafts are of open type, having a complex packing (Fig. 75) of the needle bearings in

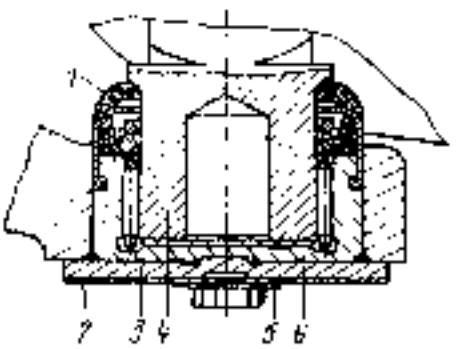

Fig. 75. Needle Bearing Complex End Packing

1 — end packing; 2 — balancing plate; 3 — cover; 4 — cross-piece; 5 — locking plate; 6 — needle bearing

the joints. The propeller shafts used for driving the front and rear axles are similar in design, differing in length and by connecting flanges. Design of the intermediate propeller shaft is shown in Fig. 76.

1.2 mm (for front and rear axles drive shafts) and to 0.55 mm (for intermediate and intermediate axle drive shafts) and also at excessive vibration, repair or replace the shafts;

— if radial more than 0.25 mm and end more than 0.35 mm clearances are formed considerably in cross-piece bearings, disassemble the joints and, if need be, replace the bearings and cross-pieces. When disassembling, take care not to cause damage to the end packings; otherwise, replace the packings.

Before reassembling the joints, pack lubricant in between the working edges of the end packing. After reassembling, check that the cross-pieces turn in the bearings smoothly, without jamming.

When assembling the propeller shaft, check that the pointers made on the tube shaft and sliding fork are set one against the other and the fork flanges and the balancing strips are set in the previous position. With this purpose mark the parts before disassembling the propeller shaft.

Prior to fitting the propeller shaft on the truck, coat the mounting surfaces of the flanges with packing paste УН-25.

Drive Axles

Truck drive axles are of pass-through type and main gears top arrangement.

Axle final drive is of double-transmission type comprising a pair of bevel gears 1 and 14 (Fig. 77) with round teeth and a pair of skew spur gears 4 and 32.

A symmetrical tapered differential unit with four satellites is bolted to the driven spur gear. Depending on truck specifications, the final drive gear ratio is 7.32 or 8.9.

Final drive units of 7.32 gear ratio, differing from other final drive units of another gear ratio, have marking strips with the gear ratio designation. The strips are fixed under the bearing body cap bolt of

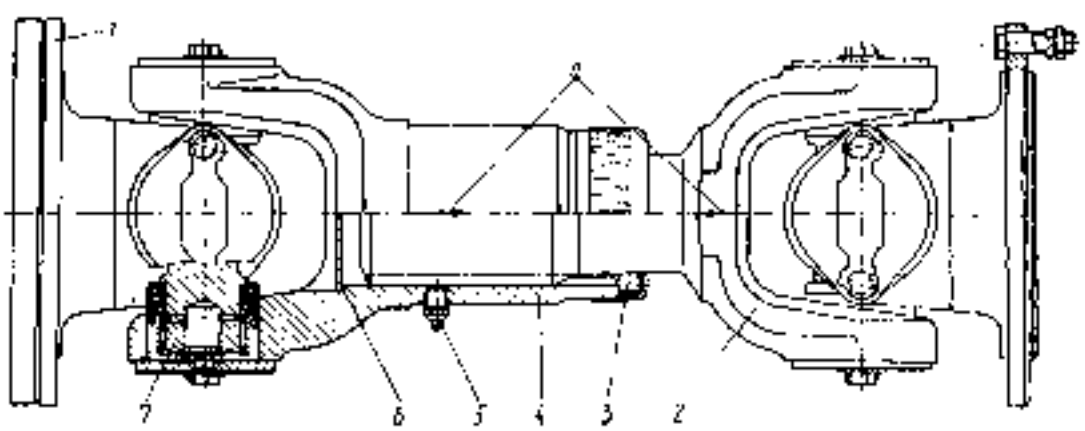

Fig. 76. Intermediate Propeller Shaft

1 — flange; 2 — intermediate propeller shaft; 3 — packing ring; 4 — clamping fork; 5 — lubricator; 6 — stop ring; 7 — cross-piece; 8 — setting screw

All the propeller shafts are balanced correctly.

When the truck is in service:

— check regularly that the propeller shaft flanges are secured properly;

— check periodically the clearance in the spline connection. If the clearance is formed in excess of

the driving spur gear of 8.9 gear ratio and have no marking plates. Reduction gears differ in marks on the driving and driven spur gears (Table 1).

Final drives mounted on the front and rear axles differ from the final drive of the intermediate axle in drive flanges. Bush 27 with cap 24 is instal-

led on the front end of the front axle driving gear shaft, while flange *18* is installed on the rear end of same. The final drive of the rear axle is provided with one flange at the side of the driving bevel gear. The splines may not be made at the opposite end of the driving gear shaft.

Table 1

Gear ratio	Mark on driving bevel gear of bevel gear axle	Mark on driven spur gear
7.32	dia. 10 mm drilling at 2 mm distance from edge	Chamfer under toothed rim
8.9	None	None

The final-drive unit is mounted on axle case *10* (Fig. 78) via a parking paronite gasket *9*, 0.8 mm thick, secured thereon with eleven bolts and two studs. Nine bolts and studs are available on the outside, and two bolts, in the bevel gear cavity and altered with wire. Access may be made to inner bolts only after side cover *6* has been removed.

Final-drive gears and bearings are lubricated with oil filled in the axle case. Oil is entrapped by gears, splashed over, flowing via roller bearing 2 (see Fig. 77) to the final drive unit case gear cavity and then to the axle case.

The driving bevel gear bearings are oiled from the bevel gear cavity. Oil is fed via pocket in the case cover and the oil feed union into the bearing body.

Axle cases *10* (see Fig. 78) are combination units consisting of cast middle portion and semi-axle tubular housings *12* press-fitted therein. The rear bogie axle cases are unified between each other. The semi-axles are fully-unloaded units splined with the hub.

Front axle of the truck is a driving controllable unit. Design of the front driving axle steerable wheels is shown in Fig. 79. Torque is transferred to the front driving wheels via semi-axles and an equal angular-velocity disk type joints (Fig. 80).

For ensuring reliable and long-life service of the driving axles, use lubricants in compliance with the lubrication chart maintaining the oil level as required in oil cases. For changing the lubricant in front driving axle steering knuckle bodies, dismantle the wheel, brake drum with its hub, brake guard, slewing journal, remove aged lubricant and wash the parts of the equal angular velocity joint. Check regularly that the bolts are tight. Fastening the final drive unit to the axle case. Untight bolts may cause buckling of the case. Final drive adjustment should be performed during every sixth MW 2 (96 000 km).

When adjusting the final drive, adjust the taper bearing preload and check the contact pattern in the bevel gearing. For adjustment, remove the final drive from the truck. Check the preload through a torque needed for turning the shaft. Determine the turning resistance torque by a dynamometer.

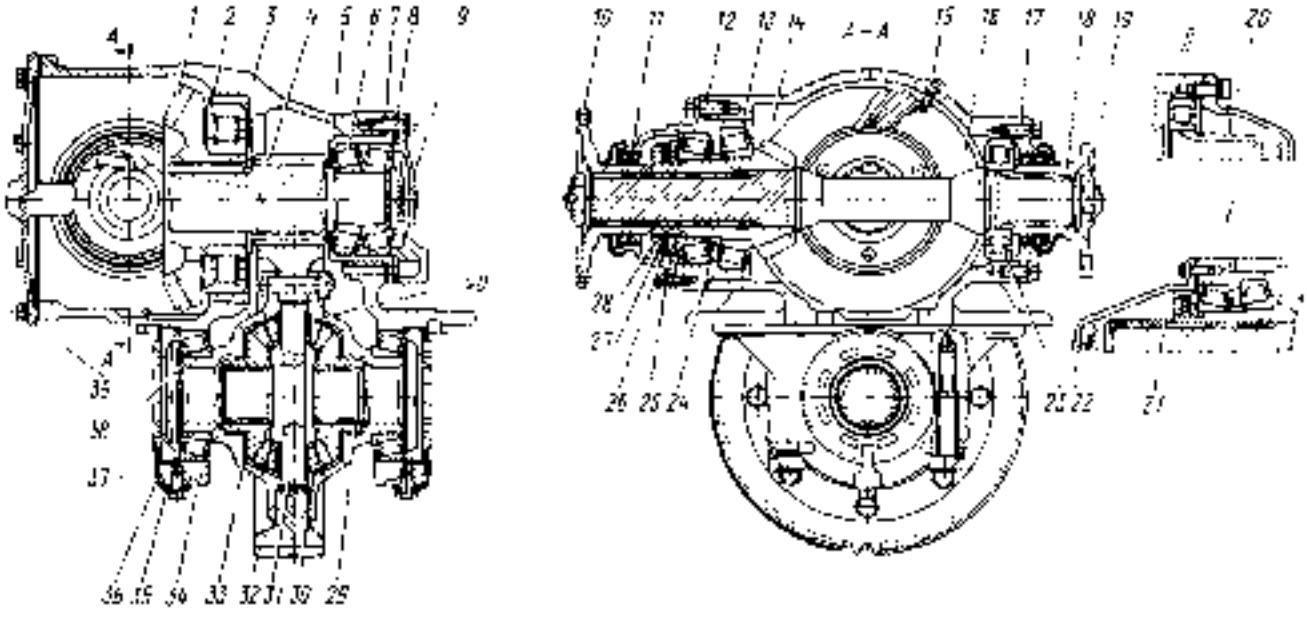

Fig. 77. Final Drive:

1 — driven bevel gear; *2, 21* — spur gear roller bearings; *3* — final drive casing; *4* — driving spur gear; *5* — bearing body; *6* — side cover; *7, 8, 11* — shims; *9* — bearing body cap; *10* — intermediate spur driven flange; *13* — roller; *14* — driving bevel gear; *15* — locking sleeve; *16* — driving gear shaft; *17* — gasket; *18* — rear axle drive flange; *19* — flange; *20* — rear axle rear bearing cap; *21* — distance bush; *24* — front axle front bearing cap; *25* — shim; *26* — nut; *27* — lock washer; *28* — cover washer; *29* — lockout; *30* — semi-axle gear; *31* — differential satellite; *32* — differential cross-cover; *33* — driven spur gear; *34* — supporting washer; *35* — differential bearing cap; *36* — locking strip; *38* — lock plate; *39* — differential bearing adjusting nut; *40* — differential cup; *41* — mating cavity; *42* — satellite washer; *I* — for front axle; *II* — for rear axle

Axle cases *10* (see Fig. 78) are combination units consisting of cast middle portion and semi-axle tubular housings *12* press-fitted therein. The rear bogie axle cases are unified between each other. The semi-

Adjustment of the final drive should be as follows:

1. Fit the final drive unit in the fixture, remove the differential unit and flanges. Screw out the bolts which fasten bearing body *10* (see Fig. 77) of driving bevel gear *14*. Pick out the driving gear shaft together with the body and gear.

Clamp the driving gear in a vice by the toothed rim (Fig. 81). Screw out the bolts which fasten the

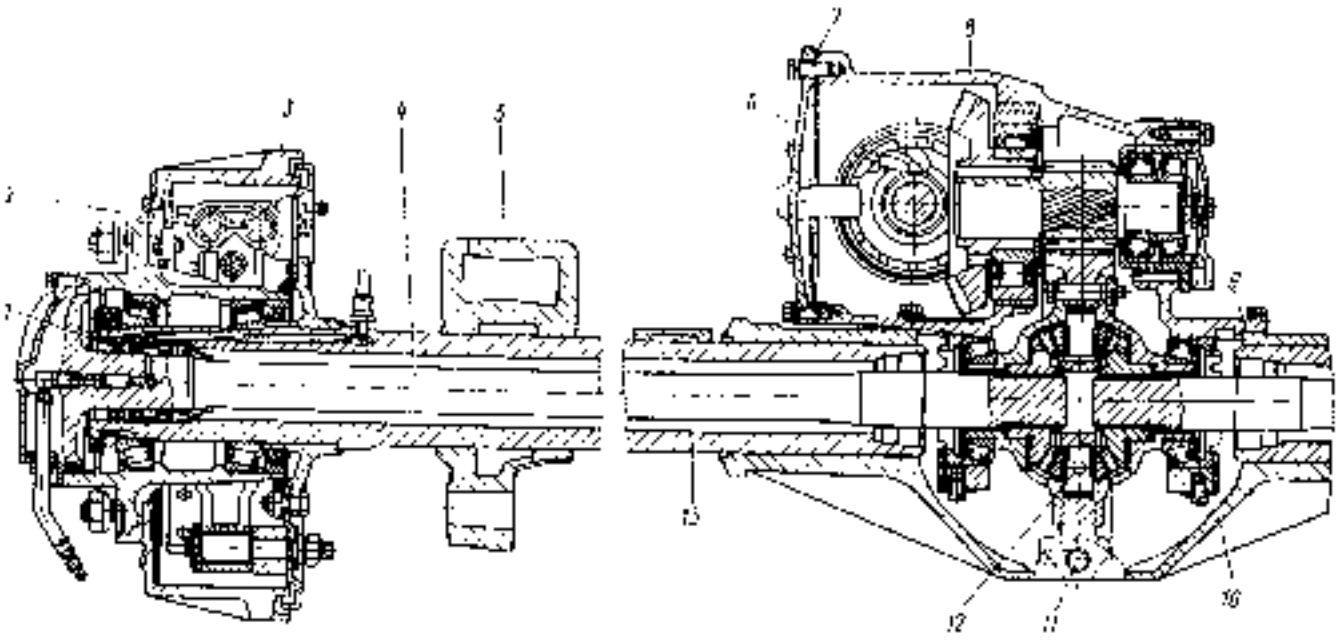

Fig. 78. Intermediate (Rear) Drive Axle

1 — air feed collar; 2 — wheel cylinder; 3 — brake drum; 4 — semi-axle; 5 — spring supporting bracket; 6 — case cover; 7, 8 — gaskets; 9 — final driver reduction gear; 10 — axle case; 11 — drain plug; 12 — check plug; 13 — [illegible] housing

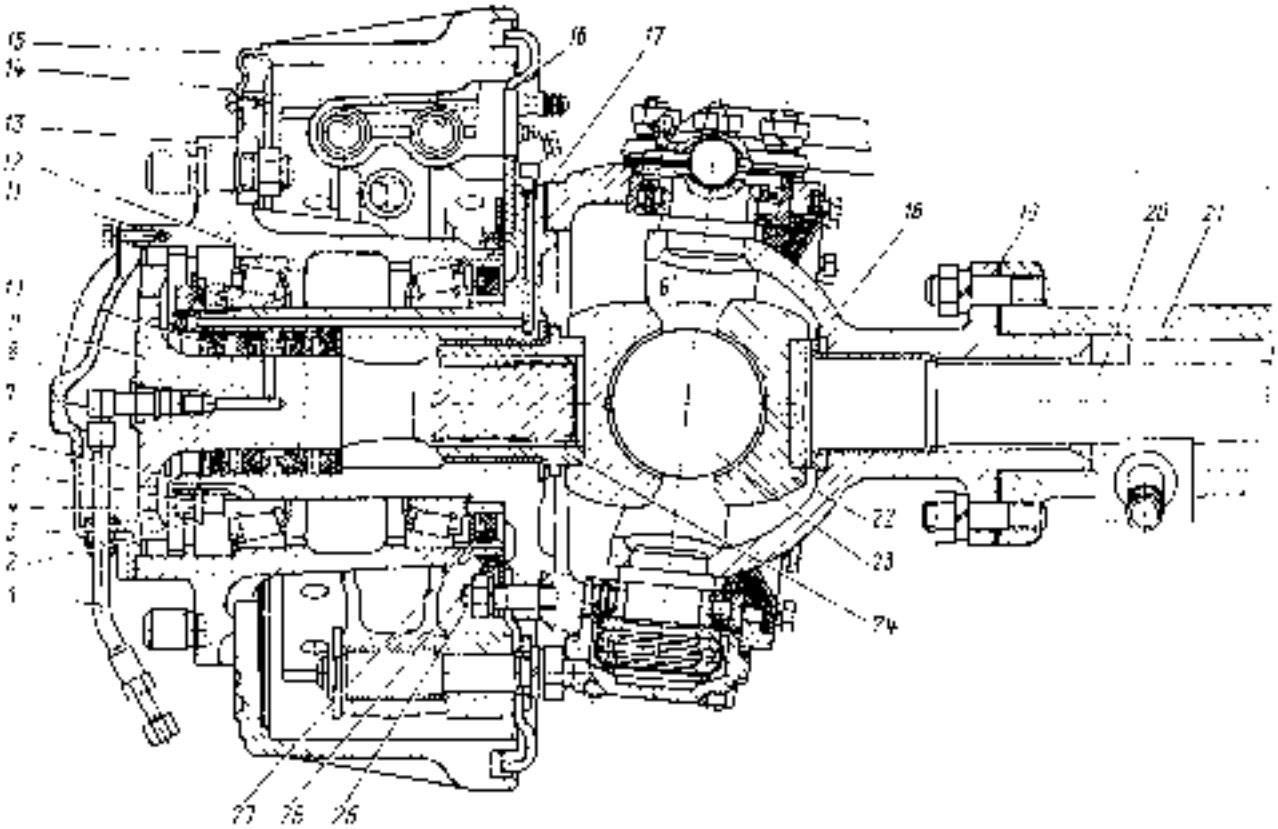

Fig. 79. Drive to Steerable Wheels of Front Drive Axle

1 — air feed hose; 2 — safety washer; 3 — lock washer; 4 — [illegible]; 5 — [illegible]; 6 — wheel hub cover; 7 — outer semi-axle; 8 — [illegible]; 9, 10, 11 — drum; 12 — [illegible]; 13 — hub; 14 — wheel brake cylinder; 15 — water drain; 16 — brake guard; 17 — ball support; 18 — inner semi-axle; 19 — semi-axle case; 20 — joint stem; 21 — joint disk; 22 — outer semi-axle fork; 23 — stud; 24 — dust-proof gland; 25 — [illegible]

cover and remove the latter. Unlock locknut 26 (see Fig. 77) and unlo it. Remove lock washer 25 and safety washer 27. Tighten the nut at 450—500 N·m (45—50 kgf·m). Fit the indicator and measure clearance in the bearings. Do not readjust the bearing

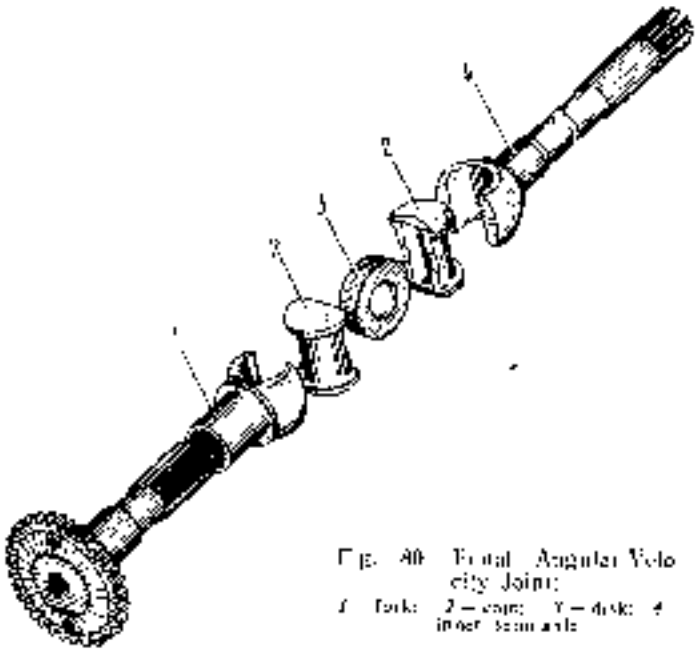

Fig. 40. Front Angular Velocity Joint:
1 — fork; 2 — cap; 3 — disk; 4 — inner semi-axle

body if no clearance is sensed after the nut has been tightened.

Estimate reduction in thickness of shim 24 (nominal value plus 0.03 - 0.05 mm in preload). Undo the nut, remove the bearing and shim. Grind (or select) the shim to the required size, fit it on and assemble the bearing assembly of the driving bevel gear. Torque for tightening the nuts is 450—500 N·m (45—50 kgf·m).

Lock the locknut bending out one edge of the shim. Check that torque required for cranking the driving bevel gear in the bearings is about 0.6 - 1.4 N·m (0.06—0.14 kgf·m). Check that the force on the dynamometer when coiling the cord on the body surface is 7.5—17.5 N (0.75—1.75 kgf), see Fig. 81.

2. Adjust preload of the bearings on the intermediate shaft. When adjusting, select a pack of shims 8 (see Fig. 77) to be placed under the bearing cap 9 of body 5. Check that the torque required for cranking the intermediate shaft is about 0.9—1.5 N·m (0.09—0.15 kgf·m).

When using the dynamometer for measuring of torque, coil the cord on the spur gear rim; check that the dynamometer indicates within 17.6—29.3 N (1.76—2.93 kgf) for gear ratio 7.32 and 20.1—33.4 N (2.01—3.34 kgf) for gear ratio 8.9).

Remember that, when shims are removed from under the body cap, when the bearings are being adjusted, the driven bevel gear may be shifted towards reduction of the side clearance; therefore, add shims under the bearing body for maintaining this clearance.

3. Mount the body with the driving bevel gear in the final drive gear unit case. Tighten the body fastening bolts with torque of 60—80 N·m (6—8 kgf·m).

Check for correct meshing of the bevel gears, using paint contact pattern. The pattern length is of 60% minimum, for the tooth length (Table 2). Check that the pattern is at 5 mm before the tooth narrow end. Now check that the side clearance across teeth (at the root) is about 0.1—0.1 mm. For changing the backlash in the bevel gears, without disturbing the contact pattern, shift both gears to a distance which is proportional to the number of teeth of each gear, i. e. shift the driven bevel gear 2.2 times (24 : 11) farther than the driving one.

Table 2

Adjustment of Contact in Meshing of Bevel Gears of Final Drive Unit

Contact pattern on driven gear		Method of setting the gears correctly	Gear shift [illegible]
Forward movement	Reversed movement		
			
		Correct contact	
		Shift driven gear to driving one. If backlash is too small, shift out driving gear	
		Shift driven gear apart from driving one. If backlash is too big, shift driving gear to driven one	
		Shift driving gear to driven one. If backlash is too small, shift out driven gear	
		Shift driving gear apart from driven one. If backlash is too big, shift driven gear to driving one	

4. Mount the differential unit and adjust the differential bearings. Tighten the differential bearing cap fastening bolts with a torque of 320 N·m (32 kgf·m). When adjusting the differential bearings, use nuts 37 (see Fig. 77). On tightening the nuts, check that the distance between the differential bearing caps is widened by 0.04—0.14 mm. When adjusting, crank the differential unit so as to set the rollers in the bearings. The driven spur gear rim

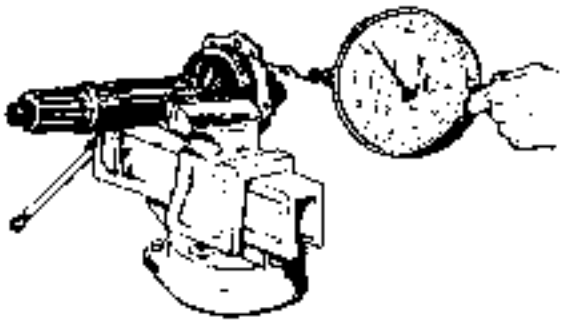

Fig. 81. Adjusting Check of Driving Bevel Gear Bearing

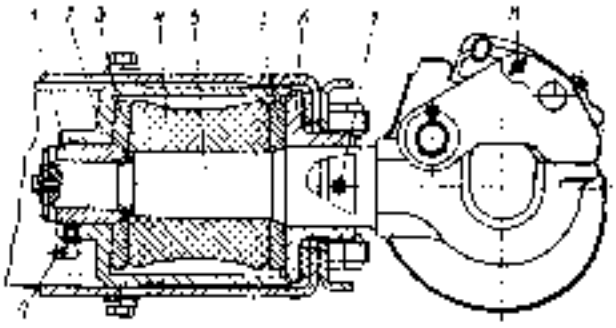

Fig. 82. Towing Hook

1 — hook; 2 — bearing; 3 — plastic rings; 4 — elastic element; 5 — locking block; 6 — guide bush; 7, 8 — bolts; 9 — lock cotter pin

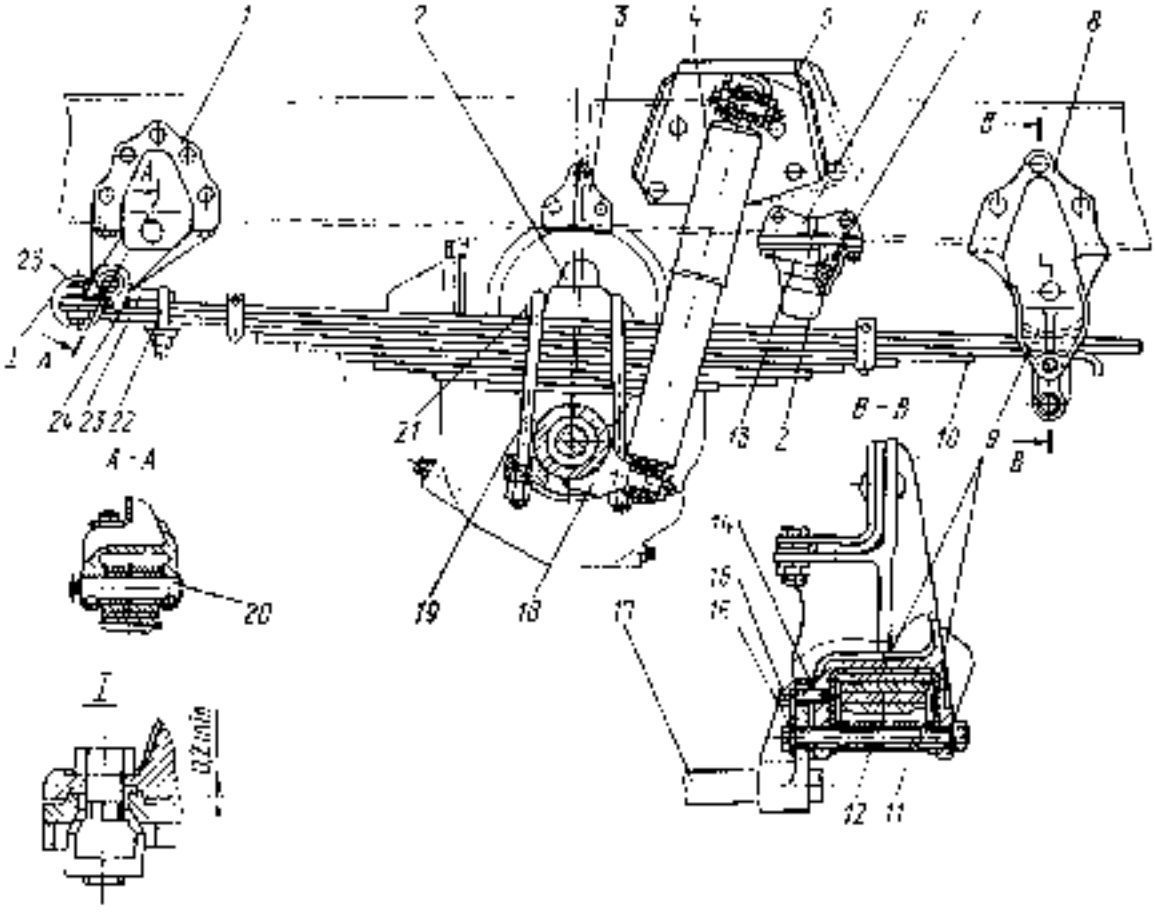

Fig. 83. Front Axle Suspension:

1, 5 — front and rear brackets; 2 — spring buffer; 3 — buffer thrust bracket; 4 — shock absorber; 6, 8 — shock absorber brackets; 7 — auxiliary buffer bracket; 9 — pad; 10 — spring; 11 — brake balancing bell lever; 12 — clevis bushes; 13 — auxiliary buffer holder; 14 — adjusting strap; 15 — brake balancing bell; 16 — pin; 17 — locking strap; 18 — rear brackets brace; 19, 20 — U bolts; 20 — spring overrun; 21 — cover plate; 22 — spring eye; 23 — bracket; 24 — hole

should be positioned symmetrically relative to the drive gear rim.

Due to the improved method of manufacturing the differential gears, the tooth profile of axle-shaft gear and satellites has been changed. The changed gears are not interchangeable with earlier produced ones and should be replaced in a set. To distinguish them, there are marks at the small module side; dia 90 mm grooving in the axle-shaft gear and a stepped end in the satellite.

Adjust the steering knuckle king pin bearings when performing sixth MW-2 (every 96000 km) as follows:

1. Distraude the wheels and place the stops under the steering knuckle lower covers.
2. Remove steering knuckle levers.
3. Remove two shims out of the pack from each lever: one of 0.05 mm thick and the other of 0.1 mm.

Pack 50 g of Litol-24 GOST 21150—87 lubricant and refit the levers. Tighten the nuts with a torque of about 110—140 N·m (11—14 kgf·m).

4. Remove the stops and extract the lower covers. Remove the pack of shims from under each cover of 0.15 (0.05+0.1) mm in thickness.

5. Refit the covers and take up the nuts with a torque of 110—140 N·m (11—14 kgf·m).

6. Mount the wheel.

For adjusting the wheel hub bearings:

1. Jack up the axle from the adjustable wheel side.

2. Remove the cover and screw in the elbow with hose from the semitrailer.

3. Using a puller, pull the semi-axle splines out of mesh with the hub and extract the semi-axle.

4. Undo the outer nut and remove the lock and safety washers.

5. Turn the wheel by hand and check that no friction is sensed between the brake drum and shoes.

6. Tighten the nut with a torque of 200—250 N·m (20—25 kgf·m) when tightening the nut, turn the hub for self-setting of rollers in the bearings; then slacken the nut through about 1/5—1/6 of a turn and lock it by a safety washer.

If the pin could not be set aligned with slots in the safety washer, it is allowed to slacken the nut for a value which does not exceed the distance between two adjacent slots. Place a lock washer, tighten the locknut with a torque of 400—500 N·m (40—50 kgf·m) and lock it. To ensure connection of wheel inflating hose to the wheel valve, mount the semi-axle with the hub cover in such a way that the inflating hose is symmetrical between the studs fastening the wheel at the side of the wheel valve.

Having finished the assembly, check the wheel bearings for proper adjustment at a driving trip of 10—20 km. In the case of proper adjustment, the hub should be cold or slightly warm. If the hub is heated considerably when touched by hand, check the bearing adjustment.

RUNNING GEAR

Frame

The truck frame is a riveted structure, consisting of two stamped variable-section side members interconnected by six cross-pieces and a bumper in front.

In service inspect regularly the side members, cross-pieces, brackets, also check bolted and riveted joints.

If loose or cut-off rivets are seen, replace them with bolts.

Towing unit is secured in a special cross-piece. When servicing the towing unit, grease and clean the parts from soil. Towing hook guide rods are greased through lubricators when servicing the truck. Check that the hook could be turned unobstructedly in housing *2* (Fig. 82) and bush *6*.

Check that the hook shifts axially inside the housing by not more than 0.5 mm. To ensure it tighten nut *1* until a clearance is formed between housing *2* and pressure ring *3* at the expense of deformation of the elastic element (to be determined by free displacement of the towing hook). Then screw out the nut and check that the hook could not be axially shifted; lock the nut with a locking strip and bolt. The strip together with the bolt turned in its hole and in the hole of the hook rod may shift within the joint clearances.

Set locking cotter pin *8* when working with the trailer.

Truck Suspension

Front axle suspension (Fig. 83) consists of two longitudinal semi-elliptical springs *10* which operate in conjunction with two double-action telescopic-type hydraulic shock-absorbers *4*.

Upper lugs of the shock-absorbers are fastened through rubber bushes to the clamps of brackets *5*, lower lugs, to brackets *18* which are welded to an axle girder. In its middle portion the spring is secured to the front axle girder by means of U-bolts *19*. Rubber buffers *2* retain the axle upwards, secured in spring cover plate *21* and in auxiliary buffer holder *13*. The holder is connected with bracket *6* fastened to the frame side members. Besides, the auxiliary buffers reduce tension in the springs in the case of abrupt braking thus limiting the twisting of springs.

Eyes *23* are secured on the spring front ends by means of U-bolts *22* and bolts *25* with nuts.

Through these eyes the springs are connected with front brackets *1* with pins *20* which are locked in the brackets by means of wedges *24*.

The spring rear ends enter freely the eyes of rear brackets *8* and are held from dropping out, when the axle comes down, by bracing bolts *11* which have distance bushes *12*.

For reducing tension in the frame side members the spring rear brackets attached in the second cross-piece area are connected by brace *17* which is bolted to the brackets. The bolts are locked with strip *16*. Adjusting strips *14* are intended for taking out the clearance formed between the brace brackets and spring bracket when the brace is being mounted.

Hydraulic shock-absorbers are designed for damping vibrations of the truck frame, caused when the truck drives on rugged road. Application of shock absorbers prolongs the service life of the springs, enhancing stability and controllability of the truck.

Fig. 84 illustrates design of the telescopic-type shock-absorber. With relative displacements of sprung and non-sprung parts of the truck, the fluid contained in the shock-absorber flows over from one cavity to the other through small holes, so backing the rod that travels vertically and damping the vibrations of the truck.

Suspension of the intermediate and rear axles (Fig. 85) is of balancer type. The ends of springs *1* enter the eyes provided on supporting brackets *6*.

The springs are connected via U-bolts *2* with balancers *11* which rock on balancer spring pin *14*. Brackets *13* are press-fitted on the pin, each bracket being fastened with four bolts to balancer brackets *5*. Pushing and braking stresses are transferred from the axles to the frame through two upper *4* and four lower *15* torque rods. Lateral stresses are transferred through the springs.

The joints of the torque rods are ball type. The pins with shortened taper installed in the upper torque rods at the side of the axles are held against turning inside the brackets Woodruff keys. The torque rod joints are sealed at one end by means of gaskets placed between the joint covers and bodies,

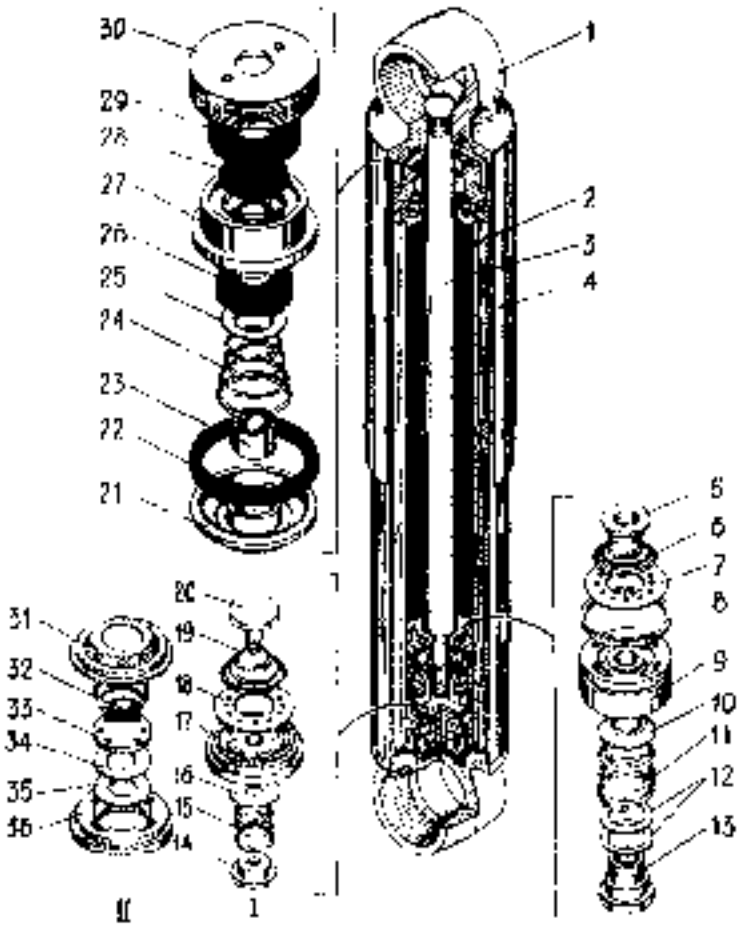

Fig. 84. Shock-Absorber:

1 — upper head; 2 — cylinder; 3 — piston rod; 4 — shock-absorber casing; 5 — thrust bush; 6, 11, 13, 22, 24, 28 — springs; 7 — auxiliary compression valve; 8 — piston ring; 9 — piston; 10 — rebound valve; 12 — shims; 17 — piston nut; 14 — rod nut; 16 — compression valve; 37 — cylinder base; 19 — by-pass valve; 20 — piston rod; 21 — cylinder cover; 30, 50 — packing rings; 31 — cover bush; 35 — washer; 36, 39 — collars; 47 — collar body; 40 — body nut; 41 — cover; 43 — pressure disk; 44 — compression throttle disk; 45 — valve disk; 46 — valve body; 1, 11 — brake versions

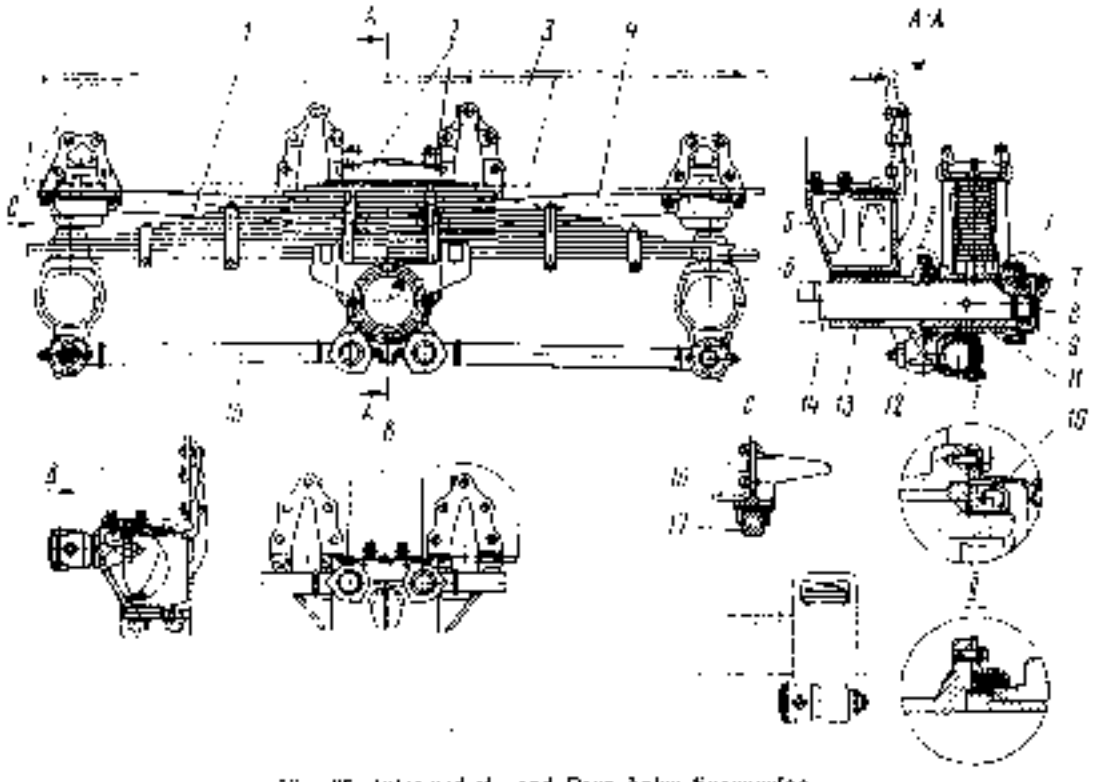

Fig. 85. Intermediate and Rear Axles Suspension

1 — spring; 2 — U-bolt; 3 — frame; 4, 15 — upper and lower torque rods; 5 — balancer bracket; 6 — spring supporting bracket; 7 — filler plug; 8 — balancer hub; 9 — nut; 10 — bracing bolt; 11 — balancer; 12 — ball pin; 13 — axle bracket; 14 — balancer spring pin; 16 — buffer bracket; 17 — buffer

and at the other end by protective rings bed against the joint bolt when installing the torque rods on the truck.

When the truck wheels encounter an obstacle, the upward stroke of the axles is limited by buffers *17* and side protrusions of brackets *16*, whereas the down stroke is limited by the springs.

Servicing. For preventing shearing of the central bolt on the front spring and centring protrusions on the rear spring, tighten the spring U bolt nuts in due time when the truck is loaded. When squeaking is sensed in the springs, jack up the truck against its frame and pack grease in the gaps between leaves. Once disassembling the spring, smear the leaves after removing the aged grease, soil and rust. Wash and smear the eyes and front spring pins.

When tightening the nuts of U-bolts *22* (see Fig. 83) on the front spring backing eye, check that the truck is loaded; proceed as follows:

— screw the nut home;

— screw the nut out through 1.5—2 of a turn;

— flatten the threading in two opposite points.

In the course of service do not tighten the U-bolt nuts completely so as not to cause quick destruction of the U-bolts and eye fasteners. If there is no clearance between the eye and the upper leaf, repair or replace the eye.

If the spring has been dismantled from the truck, tighten the nuts of U-bolt *22* with the torque of 20 N·m (2 kgf·m) and centre-punch in two opposite points.

See to it that the plate lug fastening bolt *25* is properly tightened. After each fastening punch bolt *25* in three points.

If the brace is slackened on the front spring rear brackets, tighten the brace bolts. For the upper bolt apply torque of about 120—160 N·m (12—16 kgf·m), and for the lower one, 180—220 N·m (18—22 kgf·m). Lock the bolts by bending the locking strip on the heads.

If the ends of the rear spring first leaf are worn by 5—6 mm in thickness, exchange the first and second leaves.

To remove U bolt *2* (see Fig. 85) without the torque rods uncoupling, jack up the truck, place a stop under the balancer axle or under the frame. Undo U-bolt nuts and take off the spring lining. Lower the truck on the stop in such a way that a gap is left between the spring and the balancer. Turn the balancer by a small angle and remove the U-bolt. Prior to reassembly, lubricate the U-bolt thread using lubricants type $TC_{(M)}$ or graphite grease VCeA.

To eliminate axial displacement of the balancer, unload the balancers, having raised the truck frame in such a way that the spring ends are not squeezed in the bearing brackets. Remove balancer hood *8*. Slacken bracing bolt *10*, having undone nut *9*, wipe dry the threaded portions of the nut and the balancer axle, lubricate with the sealant VT-6. Turn nut *9* home, then undo it 1/8—1/4 of a turn. The sealant squeezing out into the gap between the balancer nut end faces and the balancer bushings is not tolerated. Damaged hood gasket should be replaced.

Tighten the torque rod pin nuts with 600 N·m (60 kgf·m) torque. If the pin hole is not aligned with the nut slots, turn the nut until alignment is achieved and cotter it. When packing grease in the joints of the torque rods, check that the rubber packing ring is not deformed under the pressure.

Loosening of bolted joints of suspension parts is not permissible.

If working fluid leaks out of the shock-absorbers, tighten nut *30* (see Fig. 84). Check that the shock-absorber exhibits uniform resistance when it is expanded or compressed. The rebound effort must be within 6—9 kN (600—900 kgf), and the compression effort, 1—2 kN (100—200 kgf); for testing use a press with the rod stroke of 100 mm and a speed of 100 strokes per minute. If the shock-absorber rod travels freely, it indicates that the unit is faulty.

The shock-absorber should be disassembled and reassembled in workshop conditions keeping to cleanliness. Polished surfaces of the rod, working cylinder, compression rings and piston should be protected from dents or other injuries.

When changing the working fluid, proceed as follows:

1. Clamp the shock-absorber in a vice at its lower head and pull out the rod completely.

2. Fit a wrench in the slit formed between the housing and casing and screw out the nut on the casing.

3. Slightly rocking the rod at its upper end, extract it in assembly with the piston out of the working cylinder.

4. Withdraw the working cylinder out of the container and drain the working fluid completely.

When disassembling or changing the fluid, wash all the parts of the shock-absorber in kerosene and dry them. When reassembling, place collar *28* with inner circular protrusion sharp edges upward (towards the upper head), and collar *26* on the rod with sharp edges downward (towards the piston). Coat the collar inner faces with shock-absorber fluid. Fill the cylinder with fluid, place the piston in assembly with the rod in the cylinder, enclose the cylinder with its cover, set the packing ring, move all other parts and tighten the casing nut with a torque of 100—120 N·m (10—12 kgf·m).

The access to the body nut is shut if the shock-absorber with the plastic hood is in the extended condition. To tighten the body nuts, remove the shock-absorber from the truck and press it off to the upper head side abutting a stop against the housing end face. The body nuts tightened, reinstall the housing.

WHEELS AND TYRES

Wheel 254Г-508 with tyre 370-508 (14.00-20). The wheel is disk-type with split rim *10* (Fig. 86) incorporates split lock ring *8* and unsplit bead rings *3*.

Tube tyre. The tyre pressure may be regulated within 320 to 50 kPa (from 3.2 to 0.5 kgf/cm²) depending on the operating conditions (see section "Driving Technique").

The peculiar feature of the wheel design is availability of toroidal shoulders ensuring reliable tyre-to-rim fit in the whole range of air pressure regulation. To facilitate mounting and dismounting of wheel and tyre, the rim base carries a mounting groove.

Wheel 330-533 with tyre 1100×400-533 (Fig. 87). The disk-type wheel with split rim *1* is provided

with unsplit bead rings 4 and split fit ring 2 and lock ring 2

The tyre is tube-type of constant pressure. The air pressure in tyres of the front wheels is 250 kPa

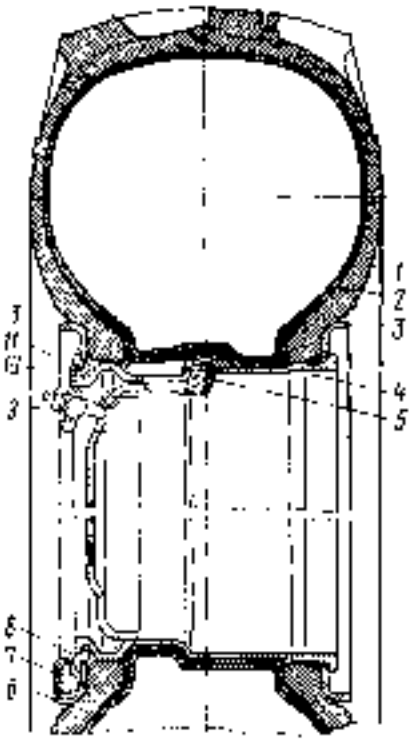

Fig. 86. Wheel 254Г-508 and Tyre 370-508 (1400-20): 1 — tyre casing; 2 — inner tube; 3 — bead ring; 4 — flap; 5 — valve stem seat; 6 — balancing weight spring; 7 — balancing weight; 8 — lock ring; 9 — wheel valve; 10 — base of rim with disk; 11 — lock ring limiting bracket

(2.5 kgf/cm²), that of rear bogie, 350 kPa (3.5 kgf/cm²).

Servicing of tyres and wheels.

The wheels and tyres may be employed to the utmost of their service life only due to regular maintenance and performance of the following rules:

— strictly observe the norms of inside air pressure in tyres;

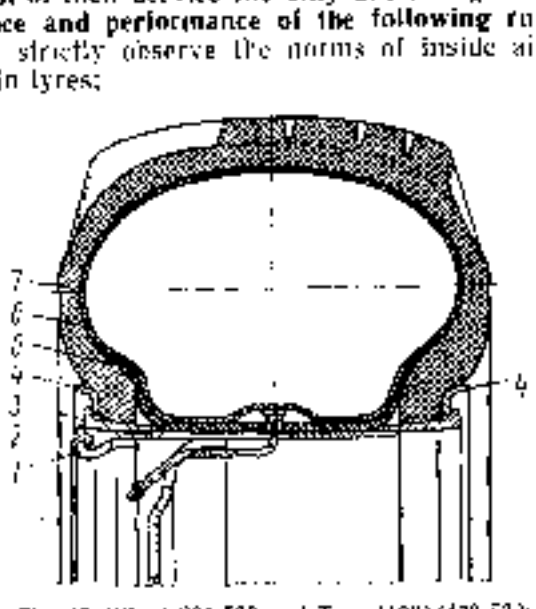

Fig. 87. Wheel 330-533 and Tyre 1100×400-533: 1 — base of rim with disk; 2 — lock ring; 3 — fitting ring; 4 — bead ring; 5 — flap; 6 — inner tube; 7 — tyre casing

— avoid overloading of tyres with the mass of cargo;

— service timely and repair the tyres;

— keep in good order the units of the running gear, steering control and brakes;

— adhere to the rules and be careful in driving the truck, be rational at that and mind always the road conditions

Maintenance. During maintenance and repairs see to it that no fuel, oil or other petroleum products which deteriorate and destroy the tyres, get on them. If still the above liquids get on the tyres, wipe them dry.

During daily maintenance inspect the tyres, wheels and their fasteners. The tyres should not have signs of failure and ply separation, and the wheels must not have cracks on the parts. Take out the foreign matters got in the thread and in the tyre side wall.

Do not tolerate slackening of wheels tightening nut operate the truck if even a single nut or stud of the wheel fastening is missing or if fastening holes in the disks get loose.

During the first 1000 km of the truck run, twice, every 100 . . 150 km and 200 . . 300 km tighten the nuts fastening the wheels and do the same after every removal and remounting the wheels on the hub.

During the second maintenance, first check tyres, rims for good repair, if necessary and if any damage to tyres and wheels is found, repair or replace them, make balancing of their rotation, tighten the nuts fastening the wheels, if they were not removed from the truck.

Dismounting and mounting of tyres.

This must be done on specially equipped sections. For mounting and dismounting jobs with wheels and tyres, make use of two tyre irons from the set of driver's tools' kit.

When performing the jobs adhere to the following requirements:

— do not dismount and remount the wheel with tyre on the truck before you make sure that the wheel is reliably lifted up. Slacken the nuts fastening the wheels and tighten the nuts on the unlifted braked truck;

— deflate fully the tyres first, then remove the failed wheel from the hub (cracks in the welding seams zone, damage or wrong position of the lock ring on the rim, out-of-roundness of the bead ring, large cuts of the tyre, wheel run-out for more than 6 mm, etc.), at last dismantle the wheel. When deflating the tyre take special care to protect your eyes, as particles are liable to be thrown out of the tube valve together with the air;

— do not use sledge hammer, crowbar, faulty or other heavy objects not available in the mounting tools' kit as per the Operating Manual, the heavy objects which may deform or damage the wheel components, may cut or break tyre casing sides, fault of tubes and flaps;

— do not inflate the tyres outside a special guard or without safety devices. Never inflate the tyres from the bottles with compressed air or gas, as this may bring about destruction of tyres and enable those found themselves nearby;

— do not change the position of the tyre, not strike the lock and bead rings, when inflating and deflating tyres, also when the tyre is under pressure;

— do not readjust the flap squeezed between the tyre bead and the rim;

— do not inflate the tyres until you are sure that the lock ring is placed correctly in the locking groove of the rim base;

— do not reassemble the tyre with the rim not corresponding in size to the rim;

— do not mount additional bead rings on the rim to diminish its width, do not use rims, lock and bead rings with faults (cracks, local dents, out-of-roundness), also the wheel components of the trucks of other models;

— do not use tyres with an extremely worn tread pattern (if the remaining depth of the protrusions is less than 1 mm), or tyres with ply separation of tyre carcass, peeling of the tread pattern or a side wall, cuts or breaks which expose the cord, in lay of metallic bead rings with scores and faults on the tyre heads, which makes remounting difficult. Do not use tyre casings whose beads have beadings, spewing of rubber and burrs on the bead toe, nor use the tubes having ply separation in the joint, and faulty valves. Cut the rubber beading and burrs aflush with the main surface of the bead rubber;

— do not apply too much sharp effort to tyre irons;

— prior to starting dismounting and remounting of wheels, clean the wheel and tyre of dirt, wash and dry them.

In winter before mounting, place the tyres into a heated room having a temperature not below 15 °C. The rubber gets brittle at low temperatures, which may bring about damage to separate parts of tyres in the course of dismounting and remounting.

Bear in mind that proper performance of operations in dismantling and reassembling the wheel reduces the volume of work and ensures safety of the components of tyres, wheels and mounting tools.

Demounting of wheel 2541-508 with tyre:

1. Place the wheel on an even clean ground with its lock part facing upward, deflate the tyre, disconnect the valve from the wheel valve and countersink it together with the seal into the tyre space, remove the wheel valve.

2. Make marks on the rim and tyre indicating the position of the balancing weights and remove the latter.

3. Upset the tyre bead off the rim seating shoulder for this purpose, fit the flat end of small tyre iron between the bead and lock rings in the demounting slot provided on the bead ring and press down

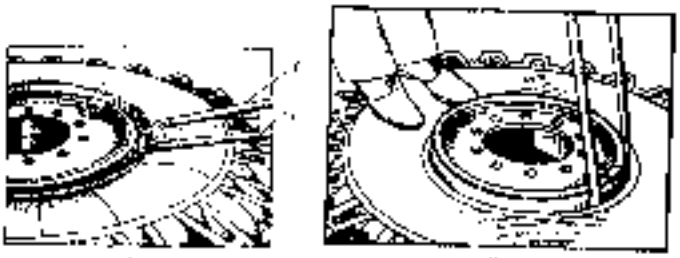

Fig. 89. Demounting of Wheel 2541-508

I — upsetting of tyre bead from seating shoulder, II — demounting of tyre bead from rim, 1, 2 — tyre irons

the iron. Then fit the flat end of the other tyre iron in the gap thus formed (Fig. 88, I). Pressing on both irons and refitting them in turn along the circumference, at a spacing of 50 ... 100 mm from each other, upset the bead ring down together with the tyre bead, then using the longer tyre iron forked end, upset the tyre bead down off the rim seating shoulder.

If it proves hard to dismantle the tyre bead from the rim seating shoulder after continuous running of the wheel, proceed with taking it out not through the bead ring, but directly catching the bead by tyre irons. For this purpose:

— fit the shorter iron flat end between the bead of the tyre and the bead ring of the wheel, as deep as possible.

— then press the tyre bead and insert the forked end of the other tyre iron into a thus formed gap so that its heel rests against the straight iron, while the forked end reliable catches the bead ring;

— press the tyre bead down;

— repeat this action all around the rim to completely remove the tyre bead from the rim seating shoulder. A spacing between the tool entering points initially should not exceed 100 mm.

4. Remove the lock ring. For this purpose, fit the flat end of a short tyre iron in the slot in the lock ring and press its end out of the rim, then using the other iron, inserted between the lock and bead rings, move the lock ring upward, fully release the ring from the rim.

5. Remove the lock ring.

6. Dismantle the tyre bead:

— step upon the tyre at the side opposite to the tube valve and upset the tyre casing to the mounting groove;

— insert the flat ends of the irons between the rim and the tyre bead in the valve zone at a distance of 200 ... 250 mm from each other (Fig. 88, II) and while pressing them, move a portion of the tyre bead up over the seating flange. It should be obligatory for the opposite part of the tyre bead to be found in the rim mounting groove;

— while holding by one tyre iron the dismantled part of the tyre bead, fully displace the bead by the other tyre iron through the entire length up, successively introducing the tyre iron flat end between the rim and the tyre at a distance of 70 ... 100 mm, right and left as to the point of the tyre bead going out side. To prevent the tyre bead from damage, insert the tyre irons through the entire width of the bead.

7. Turn over the tyre with the wheel with its lock portion downward and remove the tyre bead from the second seating flange as described in par. 3.

8. Extract the rim out of the tyre:

— set the wheel with the upright with the lock part facing outside so that the tube valve is down, countersink the valve with the seal into the tyre space;

— holding the tyre with one hand in the vertical position or leaning the tyre to a support, pull the rim by the other hand without skewing, so that the tyre bead bottom enters the mounting groove;

— take the disk or the rim upper part, remove the rim out of the tyre, preventing its dropping.

A stuck flap should be separated by a tyre iron.

Mounting of wheel 2541-508 with tyre.

Prior to mounting check technical condition of the tyre casing, tube, flap, rim, lock and bead rings.

Inspect the tyre casing and remove foreign matter from its inside space (sand, small pebbles, etc.), wipe the inside and seating surfaces of the tyre casing.

Before mounting clean the rim and the wheel parts off corrosion and paint them having eliminated burrs and metal scores first.

Check setting of the lock ring on the rim:

— a gap in the joint between the ring ends should not exceed 35 mm, and lagging of the ring ends from the rim is 1.5 mm on a length of an arch is up to 50 mm;

— local gaps between the lock ring and the rim should not exceed 1.5 mm and should smoothly diminish to both sides over an arch not over 1/4 of a circumference;

— twisting ("screw") should not exceed 15 mm.

If gaps and twisting of the lock ring exceed the above values, consider the ring unfit for mounting and it should be tried and squeezed or replaced by a new one.

To facilitate mounting and complete setting of the tyres on the seating surfaces of the tyre casing bead rim lubricate with soap solution, glycerine or paraffin. Do not use as a lubricant oils of mineral origin (grease, motor oil, etc.).

Mount the tyre on the wheel so that the arrow on the tyre side wall coincides with the direction of the wheel rotation when the truck moves forward.

Assemble the wheel in the sequence:

1. Wipe with a wet cloth the inside surface and seating points of the tyre casing, then powder with the tyre casing from the inside, and the tube and flap, from the outside. Insert the tube and the flap into the tyre casing taking into account the sense of the wheel rotation, put the seal on the valve and slightly inflate the tube.

2. Fit the bead ring with the ridge down on the rim located with its locking part up.

3. Place the tyre on the rim:

— locate the tyre inclined on the rim so that its bottom portion with the valve facing upward is slightly away from the rim. Locate the valve with the seal strictly against the valve slot of the wheel and insert the valve body with the nut into the valve slot, moving the tyre to the rim, if necessary, or away from the rim;

— lift up the tyre bottom portion at the side of the valve slot and slip it over the rim so that the lower bead enters the mounting groove, thereat the tyre due to the own mass will fit over the rim. If the tyre sticks to the rim seating shoulder, swing the tyre to move it down. See that the valve is not misaligned relative to the valve slot, and the flap is not pinched;

— insert the seal guard part with the valve into the rim slot after depressing the seal lower part inside the tyre using a tyre iron.

4. To mount the other tyre bead over the rim, step on the tyre at the side a opposite to the valve and depress this portion of the tyre casing bead into the mounting groove, in that the tyre head in the bonifer zone should be at the top above the rim. In the case of difficulty, lead the part of the tyre head on the shoulder using the tyre irons, as described in Fig. 89.

Holding the bead by a short tyre iron fast in the bracket zone against moving towards the centre, then manipulating by the other iron in the rim groove beginning from the side opposite to the bracket, displace the bead over the entire length through the shoulder alternately using a flat or forked end of the tyre iron. Land the tyre bead section in the valve zone last, somewhat below the rim edge to a level permitting installation of the lock ring, otherwise the valve slot seal will move which will make further assembling impossible.

5. Locate the bead and lock rings, aligning mark *B* on the lock ring with one of the slots *A* on the bead ring (Fig. 90).

Fig. 89. Landing Tyre Bead in Rim Mounting Groove

Fig. 90. Position of Lock and Outer Bead Rings of Wheel 2541-908

1 — bead ring, 2 — lock ring, 3 — stickers, 4 — grooves in bead ring, *B* — mark on lock ring

6. Check position of the valve with the packing in the valve slot and readjust, if necessary, connect the tube valve to the wheel valve. Place the valve on the lock ring limiter outer side and after connecting the valve and inflating the tyres fix the wheel valve as far as possible from the wheel centre.

7. Inflate the tyre (abide by the above instructions) in the sequence:

centre the bead and the lock rings relative to each other;

— inflate the tyre to 50 kPa (0.5 kgf/cm²) and see that the lock and bead rings are in their working position. It is advisable to inflate the tyres when the wheel is in the horizontal position.

In the case of wrong position of the rings, deflate the tyre, correct the position of the rings and again inflate the tyre up to 50 kPa (0.5 kgf/cm²). When deflating the tyre disconnect the air-feed hose not from the wheel, but from a compressed air source. Disconnect the hose from the wheel only after the complete deflation of the tyre.

In the case of a wrong position of the rings repeated, replace faulty parts;

— inflate the tyre to a pressure ensuring proper seating of the tyre beads on the rim seating shoulders, then set the rated pressure in the tyre.

As distinct from the known design of the wheel having tapered shoulders, the tyre beads are set on the toroidal shoulders of the wheel rim due to a rising inner pressure in this tyre not continuously but abruptly, usually at a pressure of up to 450 kPa (4.5 kgf/cm²), somewhat higher than the rated pressure.

8. If need be, balance the wheel with the tyre.

9. Mount the wheel on the hub and fix it, fasten the wheel nuts with the torque of 400 ... 450 N·m (40 ... 45 kgf·m).

To connect the air-feed hose to the wheel valve mount the wheel relative to the hub cover so (two positions are possible) that the air-feed hose is symmetrical between the wheel fastening pins.

When mounting the wheel tighten the nuts fastening the disk to the hub in the following order:

— turn all the nut on the pins manually;

first tighten the nuts using a wrench, the wheel being lifted. In doing this turn the nuts alternating them or in a criss-cross manner. When turning first five nuts see to it that the nuts are centred with their spherical chamfers in the spherical chamfers of the fastening holes in the wheel disks. The nuts should be securely tightened, as insufficient and unregular tightening may bring about lateral runout of the wheels with the tyres assembly;

— make final tightening of the nuts gradually from one nut to another, leaving every other nut on the not lifted braked truck.

10. Connect the air-feed hose and mount the protective cover of the wheel valve.

Balancing of wheels 254Г-508 in assembly with the tyre. Allowable dishalance is 52 N·cm (5.2 kgf·cm). In service, as tyres are worn or for other reasons (remounting of the tyres) initial balance may be disturbed: therefore, when the truck runs, shocks or vibrations may occur, especially on the front wheels.

Disbalance would cause wear of the tread, of steering control parts and suspensions, and it could hamper control of the truck. It is a good practice to balance the wheel statically in assy with the tyre. When rebalancing, use balancer weights which are held on the side ring by means of a plate spring. Mass of one of the weights is 0.39 kg. For rebalancing from 52 to 152 N·cm (5.2—15.2 kgf·cm), place one weight; from 152 to 252 N·cm (15.2—25.2 kgf·cm) — two weights, from 252—352 N·cm (25.2—35.2 kgf·cm) — three weights and from 352—452 N·cm (35.2—45.2 kgf·cm) — four weights.

Before rebalancing, clean the wheel and tyre from mud and other particles. Check that the air pressure in the tyre is of the rated value.

The wheel with the tyre on a special device is based in balancing over the plane of the disk and over spherical chamfers of the fastening holes.

Sequence of balancing weights installation:

1. Deflate the tyres.

2. Press the tyre bead from the bead ring using a tyre iron.

3. Place the weight with the spring on the bead ring and, holding these by hand, applying a hammer slightly, set the spring beyond the bead ring edge and upset it fully. If the spring is upset incorrectly, it may slip off the bead ring: therefore, be careful.

4. Inflate the tyre up to the rated pressure.

5. Reset the balancer weights if these have been displaced along the circumference or locked out across the bead ring radius.

For removing the balancer weights, fit a screwdriver inbetween the spring and weight, press out the spring apart from the bead ring until the weight is set free, remove the weight and spring.

Demounting of wheel 330—533 (Fig. 91, *I*):

— place the wheel on an even clean ground with its lock part facing upward;

— deflate the tyres fully;

— upset the bead ring down all along the fitting flat ends of both tyre irons between the bead ring and setting ring edge, using the tyre irons as levers;

— press out the bead ring down until the tyre bead comes off the setting ring using the forked end of the longer tyre iron resting on the shorter tyre iron flat end;

— set free the lock ring by pressing down the setting ring using flat ends of the tyre irons and fitting these between the lock and setting rings;

Fig. 91. Demounting (*I*) and Mounting (*II*) of Wheel 330-533

Fig. 92. Tyre Exchange Diagram:

I — for tyres 370-505 (14.00-20); II — for tyres 1100×400-533

— remove the lock ring;

— extract the setting ring thrusting with the tyre iron hooked end against the setting ring edge and using the tyre iron as a lever;

— remove the bead ring;

— turn over the wheel;

— press out the other bead ring similarly when the tyre bead comes off the rim seating shelf;

— lean the wheel against a wall, fit the tyre iron hooked end between the bead ring and rim edge, press out the tyre iron and remove the rim from the tyre.

Mounting of wheel 330-533:

Assemble wheel 330-533 only with tyre model O-47A of size 1100×400-533 size. Do not use other types of tyres.

Before mounting, first perform the jobs on wheels maintenance, similar to those for wheels 254Г-508, abiding by the general safety precautions in mounting and inflating the wheels.

A gap in the joint between the ends of the lock ring is 10 . . . 20 mm, a gap between the ring and the rim is not over 1.5 mm, twisting ("screw") of the lock ring is not over 15 mm.

Assemble the wheel in the sequence.

— place the bead ring of the rim with the locking part up and with the rim edge down;

— insert the tube coated with talc into the tyre, also insert the flap and slightly inflate the tyre;

— fit the tyre on the rim ensuring the central position of the tyre valve in the valve slot;

— place the other bead ring;

— place the setting ring (Fig. 91, *II*);

— set free the locking groove for fitting the lock ring therein; for this purpose, upset the setting ring downward all along the circumference using flat ends of the tyre irons fitting them in the rim locking groove;

— place the lock ring so that the splits of the

setting and lock rings are positioned diametrically opposite;

— thrusting the tyre iron against the bead ring, press the setting ring to the lock ring;

— inflate the tyre up to 50—70 kPa (0.5—0.7 kgf/cm²) and make sure that the tyre beads set correctly on the seating surfaces and that all the conjugated parts of the wheel have been adjusted properly; then inflate the tyre up to the rated pressure.

For exchanging and balancing the tyres a decision should be granted officially on estimating irregular wear of the tread, mounting more reliable tyres on the front axles, etc. When detecting the intensive and irregular wear of the tread which is, as a rule, the cause of the truck faulty running gear, steering or brakes, determine the cause and eliminate the trouble. For exchanging the tyres see Fig. 92.

In operation of tyres refer to the relevant recommendations.

Spare Wheel Holder

The spare wheel holder on the trucks may be installed vertically or horizontally. When lowering the spare wheel located vertically behind the cab, rear brace *2* (Fig. 93) fastening the spare wheel is supported by the stop which prevents the brace from lowering down; when lowering and lifting the spare wheel, remove the clamp and rod with the lock nut from this brace. The spare wheel holder to be mounted on the lengthened frame for mounting a box body is located on the left side member behind the truck.

Design of the vertically-positioned spare wheel holder is shown in Fig. 93.

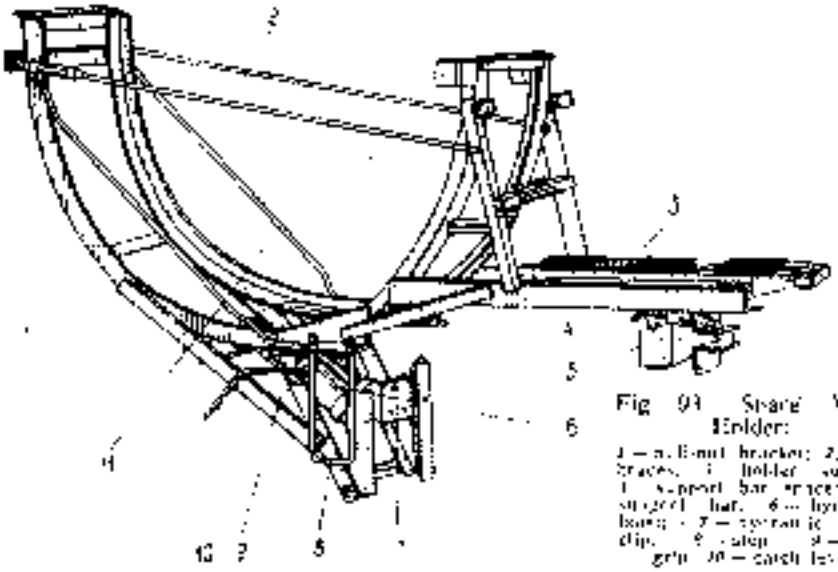

Fig. 93. Spare Wheel Holder:

1 — wheel-nut bracket; 2, 11 — braces; 3 — holder assembly; 4 — support bar spacer; 5 — stopped bar; 6 — hydraulic lock; 7 — cylindric bolt clip; 8 — clip; 9 — catch grip; 10 — catch lever

STEERING CONTROL

Steering Gear

Steering gear (Fig. 94) comprises worm *3* and steering segment *5* having spiral teeth. Steering pitman *26* is connected to the segment shaft through a splined joint. The segment thrusts against case side cover *19* via shims *20*.

In the new steering gear the plane of the segment must be lower than that of the case flange by 1.02—1.12 mm; in service the above limits could change but it should not be allowed that the segment plane protrudes above that of the case flange.

When the steering wheel is turned due to torque caused in the work — segment pair, the worm is shifted axialy together with the steering control shaft and the slide valve. The desired axial displacement could be gained due to design of bearing *2*. In sagging the segment is limited by pin *18* fitted in the case cover.

The worm and segment must be adjusted after the booster control valve is assembled completely. They are meshed so that the axial clearance will increase constantly when the segment is turned in this or that direction relative to the middle position between the teeth of the worm and segment. For adjusting the axial clearance use shims *20* of definite thickness ensuring total thickness of 0.8 mm by original gasket *22* placed under the case cover. The adjustment of the axial clearance must be checked on the assembled steering gear by the value of the axial displacement of the segment shaft measured by an indicator instrument.

In a new steering gear the axial displacement of the segment in extreme positions must be 0.3—0.65 mm and in intermediate position 0.05—0.1 mm.

In service clearances in meshing may widen due to wear, and the need for readjustment arises. Proceed with readjustment after eliminating clearances in other parts of the steering control, if the steering wheel play exceeds the allowable limits (25°). When readjusting, check that the axial displacement in the intermediate position is of the minimum value (not less than 0.01 mm), if the clearances in extreme positions are not less than those in the intermediate position.

On adjusting the steering gear test that the wheel shaft turns freely, without jamming. Marks are made on the segment end face against the second tooth and on the worm. When assembling align these marks, so as not to disturb set-up of the worm and the segment.

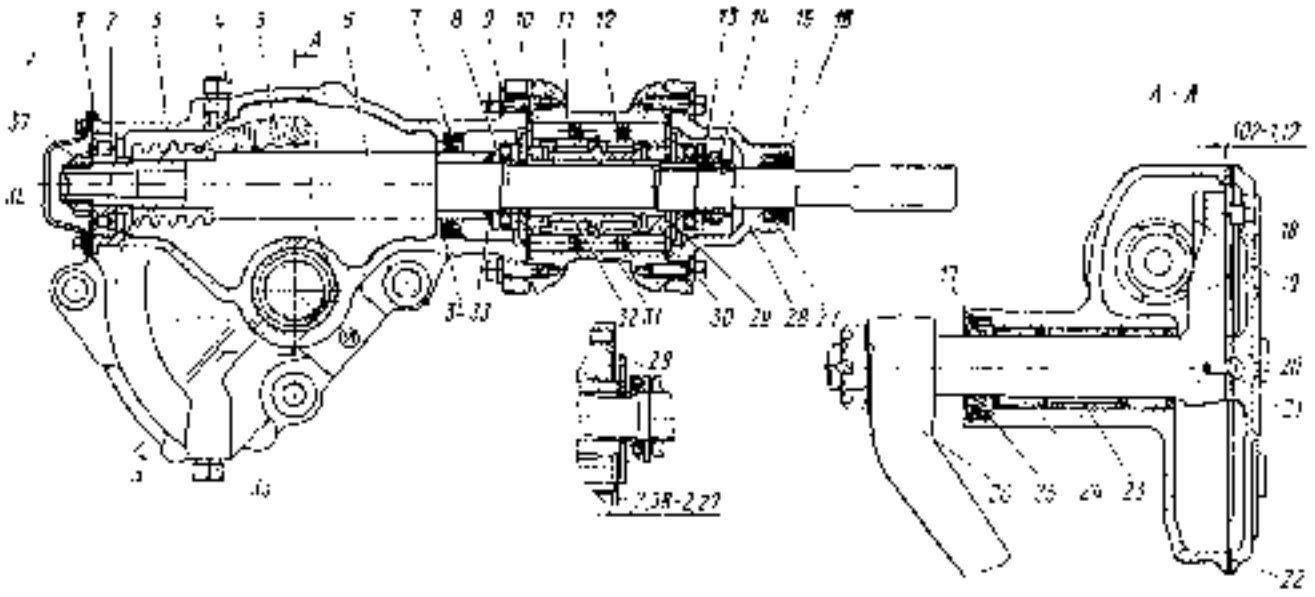

Fig. 94. Steering Gear

1 — steering gear case, 2 — radial roller bearing, 3 — worm, 4, 35 — plugs for filler and drain holes, A — steering segment, 6 — steering shaft, 7, 34, 37 — oil seals, 8 — thrust bearing, 9 — spring washer, 10, 12, 13 — packing rings, 11 — plunger, 14 — spring, 15 — washer, 16 — slide valve, 17, 18 — flange rings, 19, 20 — pins, 21 — case side cover, 30 — shims, 31 — gasket, 32 — distance bushing, 33 — radial bearing, 36 — steering pinion, 39 — [illegible] case cover, 24 — plunger, [illegible] spring, 26 — bolts, 11 — valve body, 28 — [illegible], [illegible] — thrust washer, 36 — cover, 37 — [illegible] nut.

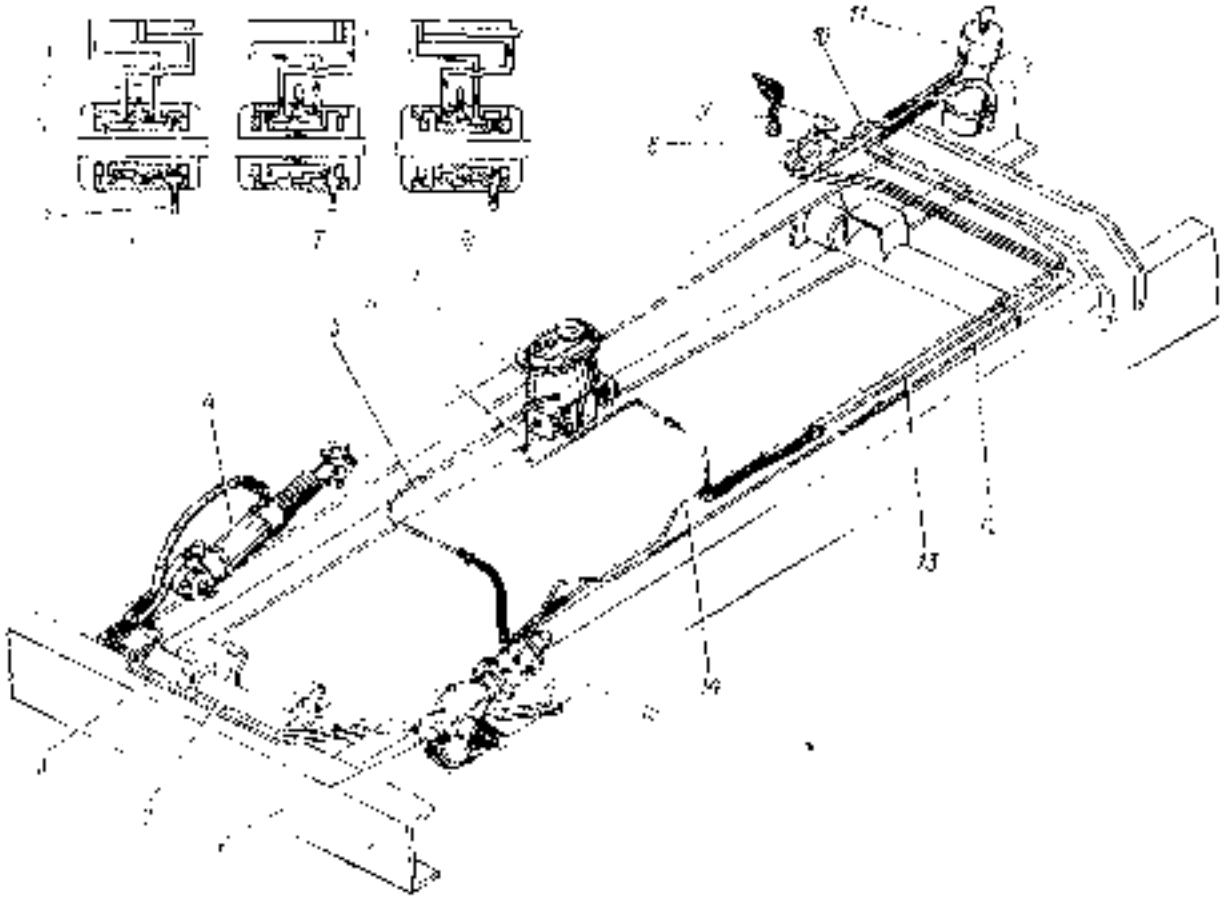

Fig. 95. Hydraulic System of Steering Gear and Spare Wheel Hoist

1 — straight forward movement, 12 — left turn, 13 — right turn, 4 — steering gear, 5, 6, 8, 10 — high-pressure lines, 9 — [illegible], 3 — drain pipe, 7 — pump, 2 — hydraulic boost control valve, [illegible] — hydraulic hoist high-pressure pipe, 13 — spare wheel hydraulic cylinder, 14 — hydraulic wheel low pressure pipe, 15 — booster control valve.

Booster Control Valve

The slide-type valve *15* (Fig. 95) is mounted on the steering gear case. The slide valve case is connected via pipes with pump *7* and with booster *4* cylinder. When the truck runs straight, the slide valve is in the neutral position. Now from the pump the oil flows in the valve case and then, through clearances between it and slide proper via drain pipe *5* to the pump tank.

In this case the booster cylinder chambers are under equal pressure and the piston does not move.

When the steering wheel is turned, the slide travels axially relative to the case and one of the booster cylinder cavities communicates with the high-pressure line and the other, with the drain line. Booster *4* cylinder rod moves until the steering wheel turn ceases. The motion of the rod is transferred to the steerable wheels via a ball pin and the knuckle right-hand lever. When the steering wheel is turned to the left or to the right, the oil flow in the booster is changed.

Total travel of the slide relative to the valve case is 4.10—4.54 mm. If the valve has been assembled correctly, the clearance between the valve case end face and the plunger moving ring end must be 2.08—2.27 mm. For checking with the use of a clearance gauge, mesh the segment and worm applying a torque of about 17—19 N·m (1.7—1.9 kgf·m) on the shaft.

Booster Pump

Booster pump (Fig. 96) is a vane-type double-action unit. When the pump shaft rotates, the vanes are pressed to the stator curved surface under centrifugal force and pressure of the oil flowing under them. In the suction chambers the oil flows in between the vanes, being then forced, when the rotor turns, to the delivery chamber.

Since the end faces of the casing and distributing plate are ground, dents or scores on them or on the rotor, stator and blades are not allowed.

The pump mounts bowl *1* with cover *8*. Washer *4* and rubber packing ring *6* are placed under bolt *5* head, used for packing the bowl interior together with rubber gasket *2*. Safety valve *7* is screwed in the cover, used for limiting the oil pressure. The bowl has filler filter *2*.

The oil returning to the pump flows through gauze filter *10*. A valve is provided, that operates if the filter is clogged.

For guarding against noise and fast wear of the pump at high speeds manifold *11* is provided whose duct communicates with the bowl chamber.

Two valves are provided in the pump cover. The by-pass valve limits the amount of oil supplied by the pump to the booster when the engine crankshaft speeds up.

The safety valve housed in the by-pass valve limits the oil pressure in the system; it opens at 8.7—9.7 MPa (90—100 kgf/cm²).

Booster

The booster damps impacts received at the steering wheel when the truck drives on uneven road, improves safety and assists in maintaining the initial direction of movement if a tyre of the front wheel blows off; it also reduces the effort applied for turning the front wheels.

The booster is articulated with the frame and front axle knuckle right-hand lever. The rod is adjusted within the limits which will ensure the turns of the front wheels. For changing the rod length, set free bolt *12* (Fig. 97) that clamps the rod end, remove safety coupling *11* from the rod end and turn the rod in this or that direction, using a wrench. If leaks are seen on the rod, tighten nut *10*.

Spare Wheel Hydraulic Hoist and Control Valve

The spare wheel hydraulic hoist (Fig. 98) is a one-way unit.

Valve *8* (see Fig. 95), used for controlling the hydraulic hoist, is mounted on the frame right-hand side member; it allows to feed oil either to booster *4* or to spare wheel hydraulic hoist *11*. The valve has spring *5* (Fig. 99) that resets plug *1* and safety valve *10* preadjusted to operate when the oil pressure rises to about 5500—6000 kPa (55—60 kgf/cm²).

Valve *10* and the return spring guard the pump against overheating. Non-return valve *9* passes by the oil from the hydraulic hoist to the pump bowl when the spare wheel is lowered. For readjusting the safety valve, use shims *11* to be placed under the seat head. When reducing total thickness of the shims, the valve operating pressure could be increased.

For hoisting the spare wheel, shift the valve control lever to the working position (to yourself) and hold it in this position till the pull-out bracket catches operate. For lowering the spare wheel, release the catch lever. Check that the wheel comes down irrespectively whether the pump operates or not under gravity.

The spare wheel hoist control is shown in Fig. 100. Control handle *3* is located on the right side behind the cab.

Steering Rods

The steering rods — longitudinal and lateral — are readjusted by length. The joints of the steering rods and those of the booster (Fig. 101) are of unified, interchangeable design. In service the joints are not readjusted.

Servicing of Steering Control

For servicing the steering control, check regularly the fasteners of the steering gear, pipes, safety coupling of the booster cylinder rod; check that the steering wheel turns freely; also service the hydraulically-operated units. Disassemble and reassemble the units in the case of utmost necessity under conditions of cleanliness. If rubber rings are stiffened or faulty, replace them.

Before disassembling the pump, mark the distributing plate in position relative to the stator and the position of the stator proper relative to the pump casing (the pointer marked on the stator indicates the sense of rotation of the pump shaft).

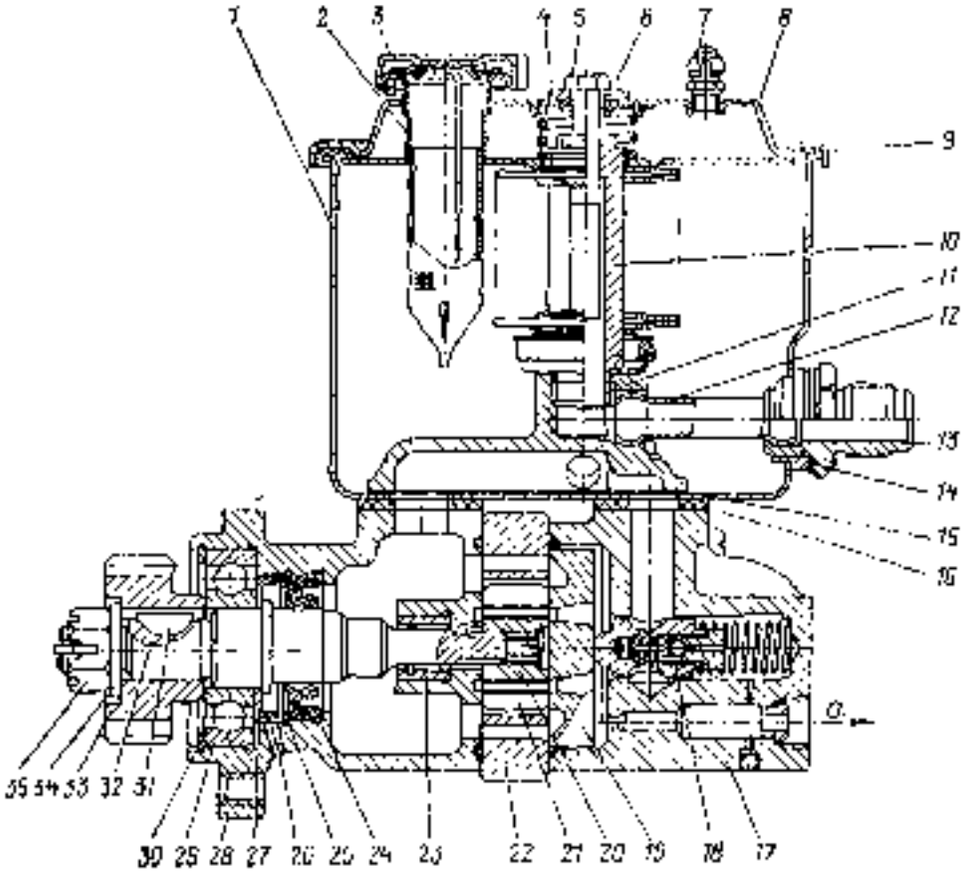

Fig. 96. Booster Pump:

1 — pump body; 2 — filter; 3 — filler cap; 4, 14, 16 — washers; 5 — bolt; 6 — packing ring; 7 — safety valve; 8 — bowl cover and sealing; 9, 26 — gaskets; 10 — pump filter; 11 — impeller; 12 — bowl tube; 13 — union; 15 — manifold gasket; 17 — cover; 18 — by-pass valve; 19 — distributing plate; 22 — valve; 23 — blade; 24 — sleeve; 25 — needle bearing; 27 — collar; 28, 30 — sealing rings; 29 — bolt; 31 — oil control ring; 32 — spring; 33 — bolt bearing; 34 — Woodruff key; 35 — washer; 36 — pump drive gear; 37 — nut; 38 — [illegible] oil feed to system

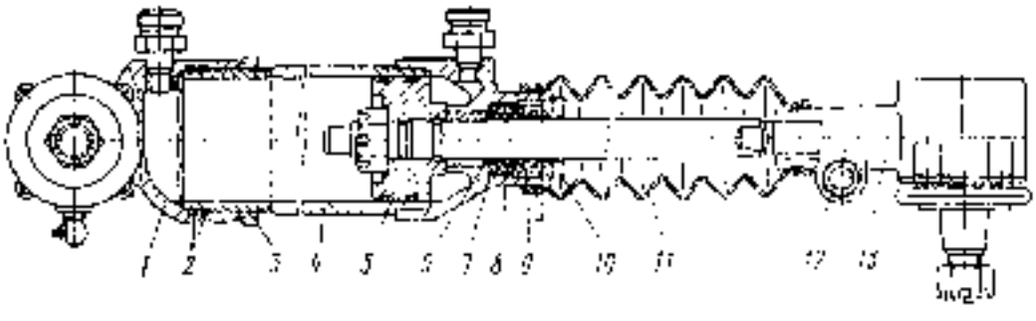

Fig. 97. Booster:

1 — cylinder end; 2, 3 — packing rings; 4 — end nut; 5 — cylinder; 6 — piston and rod assy; 7 — [illegible] ring; 8 — collar; 9 — pressure ring; 10 — nut; 11 — safety coupling; 12, 13 — bolt; 14 — rod tip

The stator, rotor and vanes of the booster pump are fitted individually one to another, as well as the by-pass valve to the pump cover; therefore, do not change their complete set.

If minor scores are seen on the end faces of the rotor, casing or distributing plate, lap one to the

Changing of oil. For changing of oil in the steering control system:

1. Warm the engine and check that the oil temperature in the hydraulic system is not lower than 20°C.

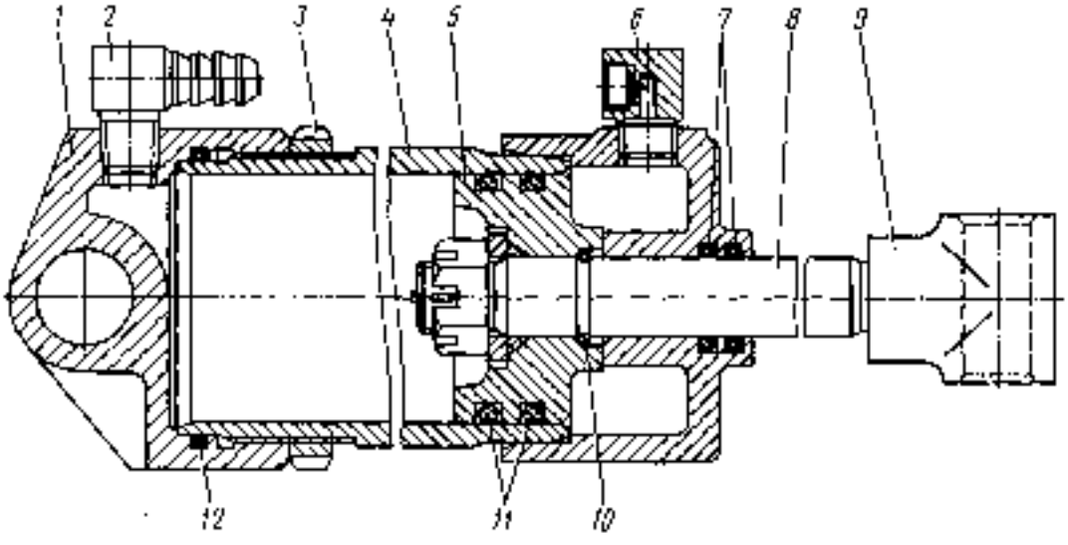

Fig. 98. Spare Wheel Hydraulic Hoist:
1 — cylinder end; 2, 6 — elbows; 3 — end nut; 4 — cylinder; 5 — piston; 7, 11, 12 — packing rings; 8 — [illegible]; 9 — rod tip; 10 — rod self-ring

other. When disassembling the pump, check that the rubber packing rings are in good repair. Before reassembling, wash parts of the pump, booster and con-

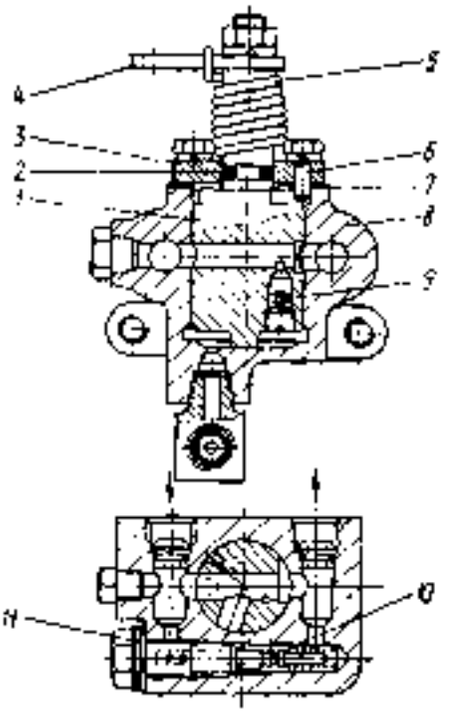

Fig. 99. Hydraulic Hoist Control Valve:
1 — stuffing; 2 — packing ring; 3 — case cover; 4 — lever; 5 — return spring; 6 — lever; 7 — gasket; 8 — valve body; 9 — non-return valve; 10 — safety valve; 11 — stuffing

trol valve in kerosene or gasoline, dry them (without wiping over) and oil; flush the filter gauzes in kerosene or gasoline and then blow them through.

When packing grease in the steering drive joints, take care that the safety coupling is not deformed under pressure of the lubricant.

2. Jack up the front axle.

3. Turn the steerable wheels to the left to the stop.

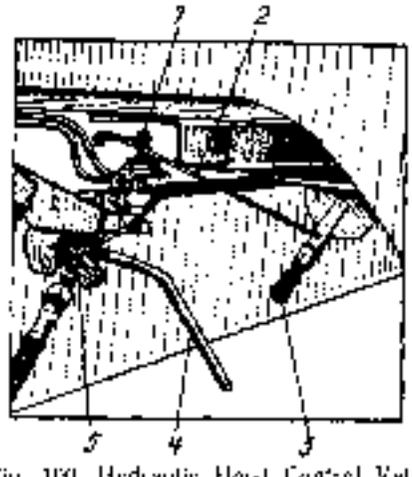

Fig. 100. Hydraulic Hoist Control Valve Actuator
1 — valve; 2 — valve actuator rod; 3 — valve actuator handle; 4 — catch handle; 5 — [illegible]

4. Disconnect the booster hoses: the front one, from the union on the frame and the rear one, from the booster union.

5. Remove cover 8 (see Fig. 96), filter 2 and wash them.

6. Drain oil out of the booster by turning the steerable wheels to the right to stop.

7. Drain oil from the rod space of the spare wheel hoist by lowering the tipping bracket.

8. Connect the booster hoses to the unions on the frame and on the booster.

9. Remove the remaining oil out of the pump bowl, refit the gauze filter and bowl cover.

10. Wash the hydraulic system:

- fill 1.5 ltr of pure oil in the bowl;

— start the engine; when it runs idling, turn the steerable wheels towards this and that side till they go (in two or three attempts); set the wheels in the extreme left-hand position;

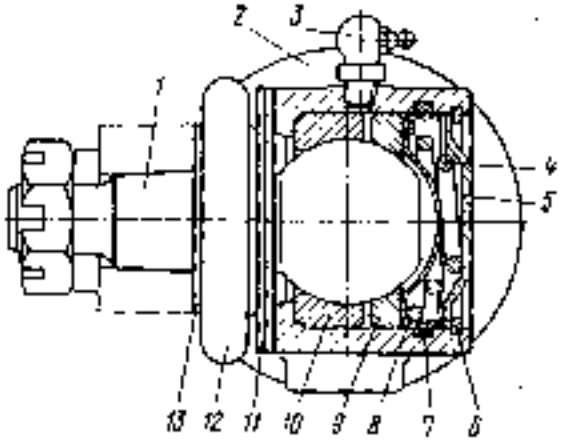

Fig. 101. Steering Gear Joint

1 — bolt pin; 2 — seal; 3 — lubricator; 4 — spring; 5 — stop plug; 6 — locking ring; 7 — packing; 8 — spring holder; 9, 10 — lower and upper inserts; 11 — cover strip; 12 — safety coupling; 13 — washer

— add oil in the bowl up to the gauge upper mark;

— hoist and lower the spare wheel holder tipping bracket in two or three attempts and secure the holder in travelling position;

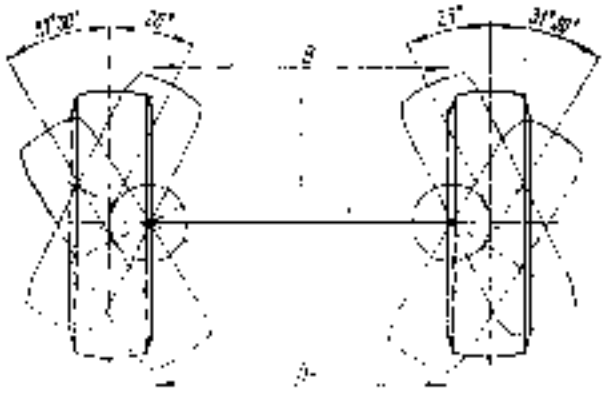

Fig. 102. Positions of Steerable Wheels

— drain oil out of the system (see items 4, 6, 7 and 8)

11. Fill and pump through the hydraulic system as follows:

— fill 1.5 ltr of pure oil in the bowl;

— start the engine; when it runs idling, bleed air out of the hydraulic system by turning the steering wheel towards this and that side till it goes (till air stops bubbling in the bowl);

- add pure oil in the bowl up to the gauge upper mark;

— hoist and lower the spare wheel tipping bracket in two or three attempts; secure the spare wheel holder in the travelling position;

— stop the engine; check oil level in the bowl and add, if need be;

— place the bowl cover filler plug back.

Testing for free wheeling. Angular play of the steering wheel should be checked when the engine runs idling, rocking the steering wheel to this and that side till the truck front wheels could be controlled. Check that the play is not in excess of 25° (or 12° for a new truck).

Before checking, see that the steerable wheels correspond to the straight route of the truck.

The play of the steering wheel should be checked if the truck is outfitted completely, placed on an even ground paved with hard dry material (asphalt, concrete or the like). Finally, check that the steering hydraulic system is filled fully, air is removed out of the working fluid.

Adjusting the front wheel toe-in. For checking the toe-in of the front wheels, see that the tyres have been inflated to the rated pressure and measure distance B_1 and B (Fig. 102) across the wheel rims. For checking:

— place the truck on an even hardly-paved ground so that the front wheels travel corresponds to the straight direction;

— using a measuring rule, check distance B_1 between the wheel rim beads in the rear section at the level of wheel centres and mark these points. Roll the truck so that these marks are in front and check distance B. In front the distance must be 1—3 mm less than that at the rear. If the difference of the distance measured between B_1 and B is beyond the limits, readjust by changing the length of the lateral steering rod after slackening the bolts on the lateral steering rod ends. On readjusting the toe-in, tighten the rod end fastening bolts and check angles of turn of the wheels; the data of these angles are given in Fig. 102. Angles of turn are limited by thrust bolts.

BRAKE SYSTEMS

The truck has independent brake systems — service, stand-by, parking and auxiliary.

Service Brake System

The system is designed to brake the truck with the required efficiency irrespective of the travelling speed, load, up- or downgrade. The drive of the brake gears is of combined type (pneumohydraulic), includes two circuits, and provides for individual braking of the front axle and of two rear axles. The brakes are controlled from the driver's cab with the help of the brake pedal which is connected with a two-section brake valve through a leverage.

The service wheel brakes are of drum-type all-wheel interchangeable units housing inner shoes 4 (Fig. 103). Each brake has two hydraulic cylinders 7 assembled in the same casing. Brake shoes are mounted on supporting pins 6. The wheel brake is readjusted on wearing of the linings by reducing the clearance formed between the lining and drum face by means of adjusting cams 2.

Adjust the brakes as follows:

— using a 22 mm wrench, turn the shoe adjusting cams fully (r.h. one at the shield side — clockwise, l.h. one — counter-clockwise);

- release the cams by backing through about 30° which corresponds to turning the cam axle head through half a face.

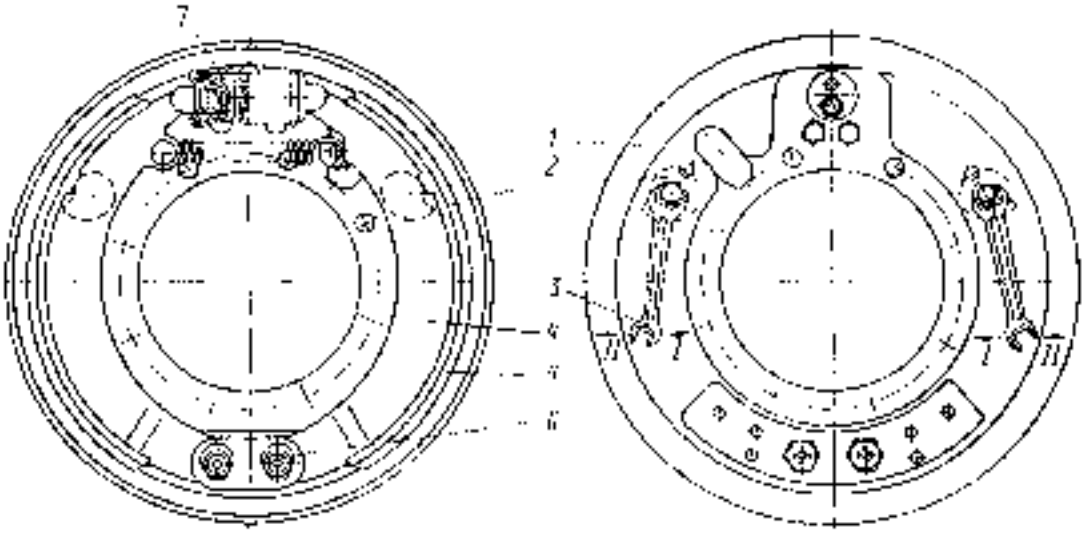

Fig. 103 Service Brake

1 — brake housing; 2 — adjusting cam; 3 — wrench; 4 — brake shoe; 5 — friction lining; 6 — brake shoe pin; 7 — wheel cylinder; 8 — clearance decrease; 10 — clearance increase

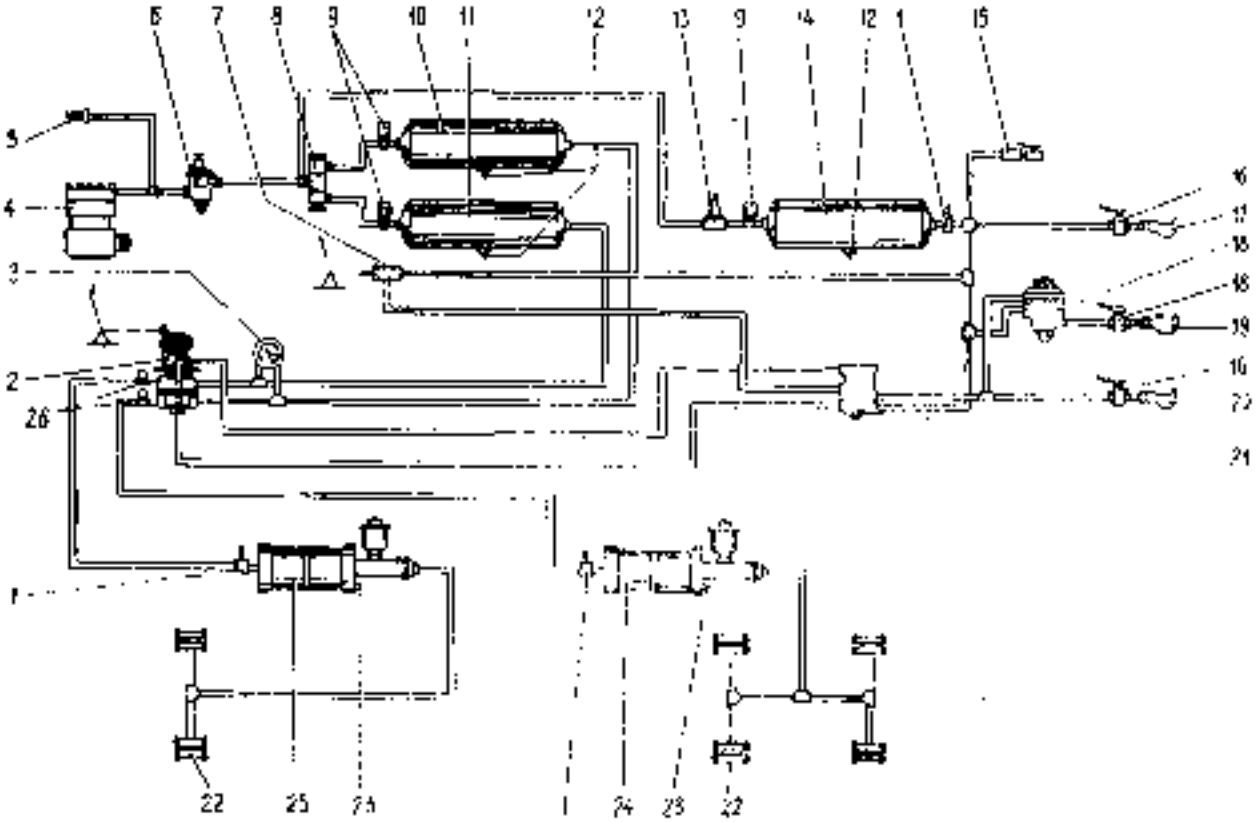

Fig. 104 Layout Diagram of Service Brakes and Combined Drive of Trailer Brakes

1 — check outlet valve; 2 — brake valve; 3 — two points pressure gauge; 4 — compressor; 5 — bowing valve; 6 — pressure regulator; 7 — trailer brake control valve; 8 — double safety valve; 9 — air system minimum air pressure pick-up; 10 — intermediate and rear axles brake circuit air reservoir; 11 — front axle brake circuit air reservoir; 12 — condensate drain cock; 13 — single safety valve; 14 — consumers and trailer brakes circuit air reservoir; 15 — complete with air cut-off cock; 16 — shut-off valves; 17 — type «Palma» feeding coupling head; 18 — trailer brake single line drive control valve; 19 — type «Ab» coupling head; 20 — type «Palma» control coupling head; 21 — trailer brake double line drive control valve; 22 — wheel brake cylinders; 23 — brake light signalling switch; 24 — intermediate and rear axles brakes air booster; 25 — front axle brake air booster; 26 — stop signal switch

On completing the operations on other wheels, check that the brake drums do not heat when the truck is running.

When adjusting do not disturb original setting of brake shoe pins 6.

Readjust clearances between the shoe and brake drum using the shoe pins only if friction linings or shoes in assembly are replaced. First set the shoe pins so, that the marks on the ends face each other. Fit a clearance gauge of 0.2 mm in thickness and 200 mm in length through the handhole in the brake drum between the drum and shoe at a distance of 30 mm from the lining lower edge. Slightly seize the gauge by turning shoe pin *6*. Remove the gauge, turn the drum and adjust the clearance of 0.35 mm between the shoe and drum at a distance of 30 mm from the lining upper edge, using another clearance gauge of 0.35 mm in thickness and adjusting cam *2*. Secure the shoe pins and check again the clearances between the shoe and drum.

If the linings are worn down from the rivet head plane, replace them. If the linings are oiled, flush them with gasoline.

If the brake drum is worn, or if circular grooves are seen, machine the drum working surface with reference to hub bearing outer races. Check that runout of the drum working surface does not exceed 0.25 mm and the drum diameter, 424.38 mm.

Air-hydraulic Drive of Service Brake Gears

The air-hydraulic drive consists of two circuits. One of them serves for actuating the front axle brakes, and the other, for actuating rear and intermediate axle brakes.

To enhance safety and effective operation of the road train, the truck mounts a combined brake drive which ensures possible connection of braking systems of towed motor transport means provided with single-line or double-line braking drives. The layout diagram of the service brake drive and trailer brake drive is given in Fig. 104.

Compressor *4* feeds compressed air via regulator *6* to a safety valve unit. The unit comprises double *8* and single *13* safety valves which distribute and fill in air reservoirs *10*, *11* and *14* of independent circuits.

— of front wheel brake mechanisms drive;

— of intermediate and rear wheels brake mechanisms drive;

— of combined drive of consumers and trailer wheels brake mechanisms.

The first circuit comprises air reservoir *11*, upper section of brake valve *2*, air booster *25* and wheel cylinders *22*, while the second circuit consists of air reservoir *10*, lower section of brake valve *2*, air booster *24*, wheel cylinders *22*.

The third circuit consists of air reservoir *14*, trailer brake control valves: *18* — with single-line drive and *21* — with double-line drive, three shut-off valves *16*, type «A» coupling head *19* to connect the trailers with single-line drive and type «Palm» coupling heads *17*, *20* for connection of the trailers with the brakes double-line drive.

If it is necessary to control the air pressure, in each circuit check outlet valves *1* are available whereto a portable pressure gauge may be connected.

When the truck moves the trailer provided with single-line or double-line brake drive, truck-trailer connection is performed with the help of coupling head *19* in the first case, and using coupling heads *17* and *20* of supply and control lines, in the second case, hence the pressure in the control line is not available.

When the brake pedal is depressed, the drive first and second circuits operate. The consumers and trailer brake drive third circuit also operates. If one of the circuits becomes inoperative, the other two continue to work.

To brake the truck with the trailer when parking, set the parking brake lever to the top fixed position; in this case control valve *7* gets engaged, which bleeds compressed air from outlet *11* (see Fig. 112) of valve *21* (see Fig. 104) and actuates the trailer brake mechanisms.

The truck is provided with brake emergency signalling and control system, which comprises pilot lamps available on the instrument board, minimum air pressure in air reservoirs pick-ups and comprises also the switches located in the brake air boosters.

The brake air drive devices serve for accumulation of compressed air in the truck and for actuating the truck and trailer brakes.

Air compressor (Fig. 105) is a piston-type single-stage two-cylinder indirect-flow unit mounted on the

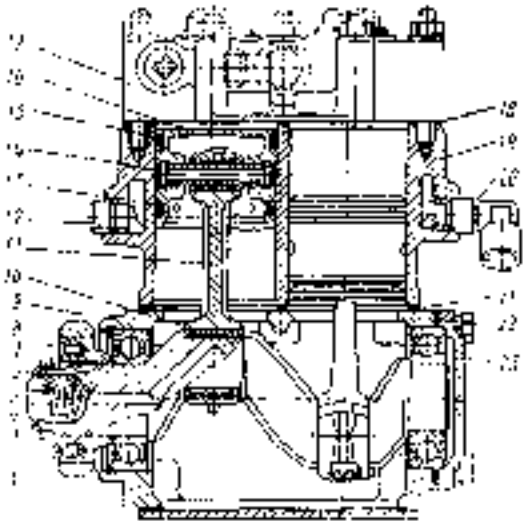

Fig. 105. Compressor

1 — crankshaft; 3 — lock washer; 5 — gear; 6 — packing; 8 — packing spring; 9 — Woodruff key; 7 — drive gear; 8 — ball bearing; 7 — cover; 10 — shaft; 11 — connecting rod; 12 — plug; 13 — oil control ring; 14 — piston pin; 15 — compression ring; 16 — piston; 17 — cylinder head; 18, 21 — gaskets; 19 — cylinder block; 20 — piston; 22 — sleeve; 23 — cover

flywheel housing in the cylinder block span and actuated from the timing gear cluster.

Pressure governor is intended to adjust pressure of compressed air supplied from the compressor. Compressed air is fed from the compressor through governor inlet *IV* (Fig. 106), filter *2*, and duct *12* to circular duct *9*. Then compressed air is fed through non-return valve *10* to outlet *II* and further goes to the the air reservoirs. Compressed air is fed simultaneously through duct *8* to space *A* under piston *7* which is loaded by equalizing spring *5*.

Outlet valve *4* is open and inlet valve *11* is closed. Relief valve *1* is also closed under the action of the spring. With the governor in this state, the air system of the truck is filled with compressed air from the compressor. When space *A* pressure equals

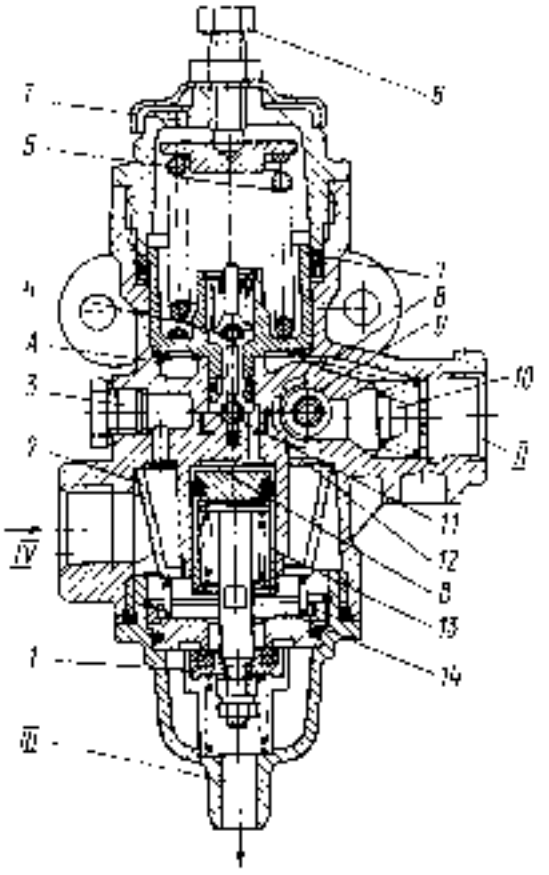

Fig. 106. Pressure Governor

1 — relief valve; *2* — filter; *3* — air bleeding-off duct plug; *4* — outlet valve; *5* — balance spring; *6* — bolt; *7* — balance piston; *8*, *12* — drains; *9* — long duct; *10* — check valve; *11* — inlet valve; *13* — balance piston; *14* — balance piston seat; *I* — chamber under balance piston; *II* — chamber over balance piston; *III* — atmospheric outlet; *IV* — outlet to air system; *IV* — inlet from compressor

750 kPa (7.5 kgf/cm²), piston *7* overcomes the force of spring *5* and goes up, valve *4* is closed, inlet valve *11* is opened, and compressed air goes from space *A* to space *B*.

Under the action of compresed air balance piston *13* shifts down, valve *1* is opened, and compressed air from the compressor is ejected via outlet *III* to the atmosphere together with the condensate accumulated in the space; non-return valve *10* is closed.

As soon as pressure in outlet *II* and space *A* drops to 650 kPa (6.5 kgf/cm²), piston *7* goes down under the action of spring *5*, valve *11* is closed, outlet valve *4* communicates the space to the atmosphere via outlet *I*. Balance piston *13* is closed under the action of the spring and the compressor resumes charging compressed air to the air system.

Relief valve *1* serves also as a safety valve. If the governor fails to operate at a pressure of 686.5—735.5 kPa (7—7.5 kgf/cm²), valve *1* opens overcoming resistance of its own spring and the spring of piston *13*. Valve *1* opens at a pressure of 980.7—1274.9 kPa (10—13 kgf/cm²). The actuation pressure is adjusted by varying the number of shims fitted under the valve spring.

The governor is adjusted using bolt *6*: screw the bolt in to increase the actuation pressure and vice versa. The relief valve actuation pressure is adjusted by varying the number of shims placed under the

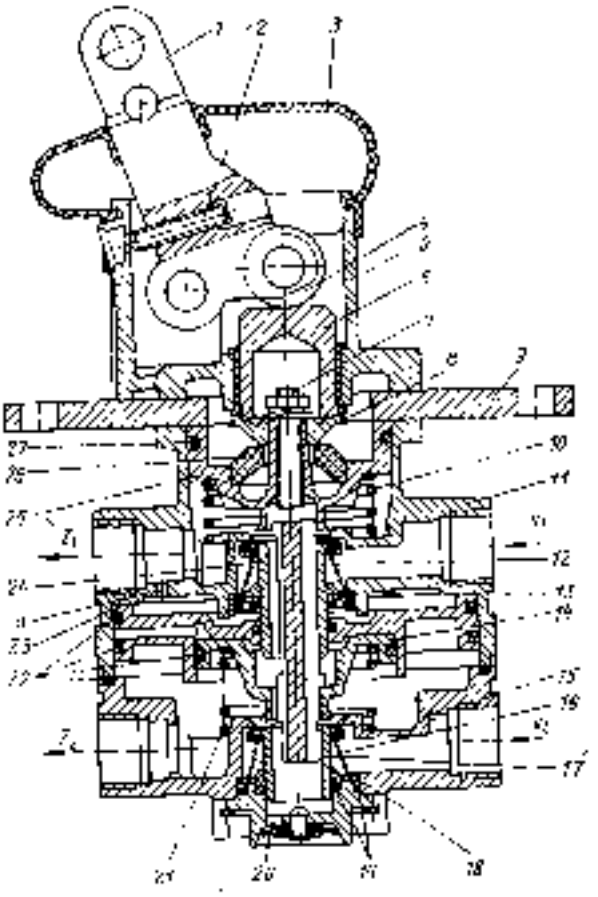

Fig. 107. Brake Valve

1 — lever; *2* — front screw; *3* — smoothing pad; *4* — roller; *5* — lever casing; *6* — push rod; *7* — bolt; *8* — plate; *9* — stopper; *10*, *13*, *26*, *27* — springs; *11* — upper casing; *12*, *16* — sealing rings; *14* — small piston; *15* — lower casing; *17* — lower section valve; *18*, *19*, *22* — packing rings; *20* — atmosphere exhaust valve; *21* — big piston; *23* — upper section valve; *24* — upper piston; *25* — elastic element; Z_1 — outlet to front axle circuit brake air booster; Z_2 — outlet to intermediate and rear axles circuit brake air booster; V_1, V_2 — outlets to air reservoirs; *a* — hole

valve spring. Proper performance of the pressure governor should be checked periodically with the engine running by reading the air pressure against the two-pointer pressure gauge provided on the instrument board.

Two-section brake valve (Fig. 107) is designed for controlling the actuators of the truck wheel brake system through two circuits and also for controlling the trailer brake valve.

The brake valve consists of upper and lower casings. The upper casing mounts the valve linkage. The lower casing is protected from soil and moisture by a hood.

Lower casing *15* houses small piston *14* which is pressed to large piston *23* via spring *21*. Valve *24* of the valve upper section seats in the upper casing due to spring *12*. Valve *17* of the lower section seats in the lower casing due to spring *16*.

Compressed air is supplied to the sections of the brake valve from air reservoirs through outlets V_1 and V_2. When the brake is released, push rod *6* and

piston *25*, *23*, *14* are held in upper positions backed by return springs. Valves *17* and *24* are pressed to the intake seats. Outlets Z_1 and Z_2 and conjugated air boosters are connected to atmosphere through opened outlet seats and hollow casings of valves *17* and *24*. When the brake pedal is depressed, driving lever *1* turns about its pin and valve push rod *6* travels downward together with upper follower piston *25*. The outlet seat of valve *24* closes in the upper section, then valve *24* goes off the intake seat and compressed air flows to outlet Z_1. Simultaneously, compressed air flows through hole *a* drilled in the casing to the chamber formed above large piston *23*. Coming down piston *23* actuates the valve lower section. Thus, the valve upper section is controlled mechanically and the lower section, pneumatically.

When the brake pedal is released the valve operates in the reversed sequence.

If the circuit conjugated with the lower section is broken and if the pressure drops at outlet V_2, the upper section continues to operate supplying air from the other circuit. If the circuit conjugated with the upper section is broken and if the pressure drops at outlet V_1 the valve lower section is actuated by the valve push rod via stud *7* and a hollow rod.

For servicing the two-section brake valve, inspect it regularly, clean it from soil and test it for tightness.

Check that the protecting hood is in good condition and that it is tight on the valve so as not to soil linkage and friction parts of the valve; otherwise, the brake valve will be destroyed. Tightness of the brake valve is checked using soaped emulsion in both braked and released conditions. If air bleeds through the atmosphere outlet of the brake valve when the brake has been released, that indicates untightness of the intake valve of one of the sections, and if the brake has been applied — of the outlet valve of this or that section of the brake valve. Otherwise, replace the brake valve.

The brake valve is actuated mechanically. Brake pedal *11* (see Fig. 68) mounted with the bracket in the cab, connected via tie *7* with lever *15* of the brake valve which is installed together with bracket *1* on the engine flywheel case. The other end of the brake valve lever is connected with lever *19* of the brake valve via adjustable tie *16*. The brake valve is installed on the truck frame left-hand side member.

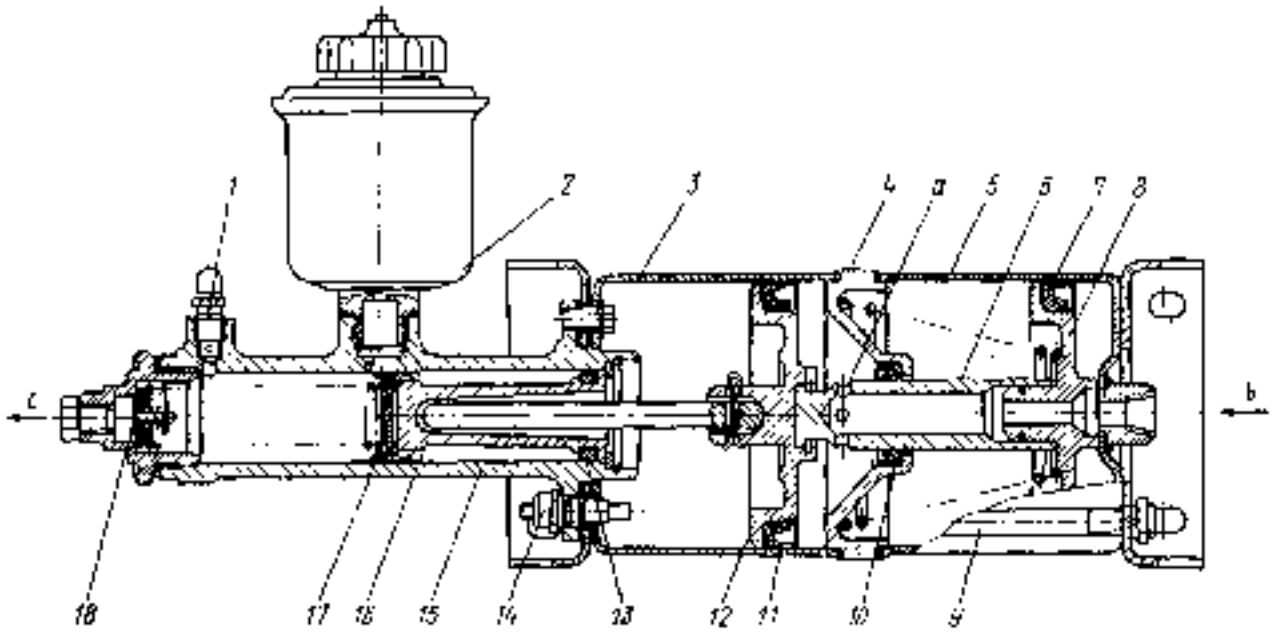

Fig. 108. Air Booster with Brake Master Cylinder

c — bypass valve; 2 — brake fluid tank; 3, 5 — air cylinders; 4 — spacer; 6 — rod; 7, 10, 11, 16, 17 — [illegible]; 8, 12, 18 — pipe lines; 9 — brace; 14 — brake master cylinder piston; 15 — brake master cylinder; 19 — valve; a — radial hole; b — lever; c — brake valve; [illegible] — in brake system

The brake valve drive should be adjusted for ensuring free travel of the brake control valve lever that corresponds to that of the brake pedal within 20—50 mm and for ensuring full travel of the lever corresponding to full travel of the pedal within 150—180 mm, so as to build working pressure in the brake control air system.

For adjusting the brake pedal, change the length of the tie. For this purpose, slacken the locknut, unlock and remove the pin and, turning the fork in this or that direction, set the tie length as required and tighten the locknut.

The size of free travel of the brake pedal should be measured if the truck air system is under normal pressure by depressing the pedal until one of the pointers of pressure gauge *1* (see Fig. 14) starts swinging.

Brake air boosters and brake main cylinders are arranged on the side-member. As the brake pedal is depressed, the brake valve-plate opens and air flows through pipes under pistons *8* and *12* (Fig. 108) of the air booster.

Under air pressure the rod and pistons travel thus actuating, via a push rod, piston *16* of the brake main cylinder so pressing fluid to the brake main line.

When the pedal is released, air flows out of the air booster via the brake valve to atmosphere. Pis-

tions of the brake main cylinder and air booster reset backed with springs.

If tightness of the air boosters has been deranged, replace worn or damaged collars. When reassembling the air booster, to prevent the covers from

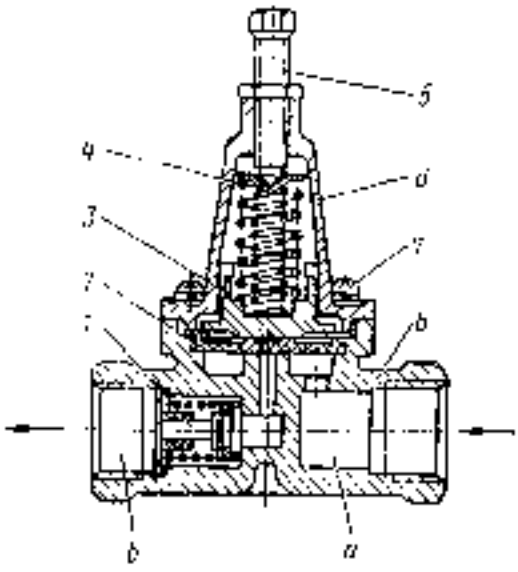

Fig. 109. Single Safety Valve.

1 — non-return valve, 2 — diaphragm, 3 — piston, 4 — spring, 5 — adjusting screw, 6 — cover, 7 — screw, 8 — body, a — intake duct, b — outlet duct

deshaping, do not tighten the nuts of braces 9 by a torque exceeding 15—18 N·m (1.5—1.8 kgf·m). Test the air booster for tightness at an air pressure of 600—700 kPa (6—7 kgf/cm²) feeding air through the pipe union provided on the booster.

Single safety valve (Fig. 109) is designed for guarding the truck brake system against loss of compressed air when the trailer brake and consumer circuit is supplied. The valve is mounted in the air system as the pointer on valve cover 6 shows the air by-pass flow direction.

The cover has adjusting screw 5 which is locked normally with a locknut. Using screw, the force of the springs is changed thus controlling the by-pass pressure value. When the screw is turned on, the by-pass pressure increases, if turned off, it decreases. Compressed air flows through duct a under diaphragm 2 which is pressed to its seat by springs via a piston, so shutting off air from the above-piston chamber. As the pressure rises to 500—560 kPa (5.0—5.6 kgf/cm²), compressed air lifts diaphragm 2 overforcing spring 4 and opening non-return valve 1 flows then to the consumers. As the pressure drops in duct a down to 500 kPa (5.0 kgf/cm²), the diaphragm lowers onto the seat backed with the springs, so shutting off the ducts. Now, the non-return valve closes so shutting off back flow of compressed air.

Double safety valve (Fig. 110) is designed for separating the compressed air feed main line to two self-contained circuits, for shutting off automatically one of the circuits if it is broken or if tightness is deranged, for stowing compressed air in the correct circuit and also for stowing compressed air to both circuits if the main line is damaged.

The double safety valve is mounted in the air system as the pointer on the valve casing shows the air flow direction. The valve casing has three outlets. For adjusting force of spring 7 that controls the air pressure at which the damaged circuit is disconnected, use shims 13.

Compressed air taken in outlet A opens flat non-return valves 9 and 11 flowing to outlets of the two

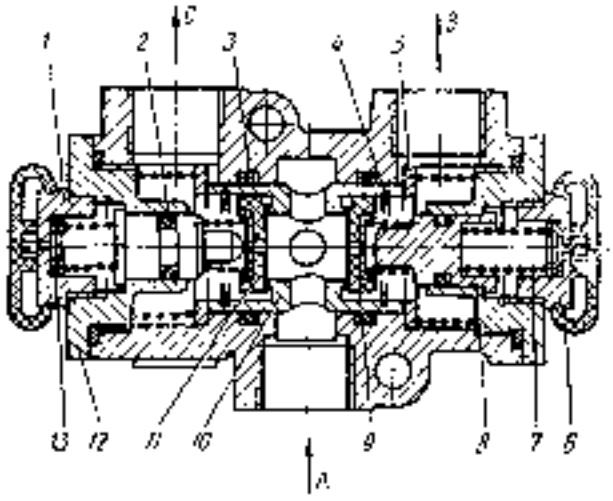

Fig. 110. Double Safety Valve:

1 — plug with drain hole, 2, 3 — packing rings, 4 — thrust ring, 5 — washer, 6 — adjusting bolt, 7 — spring, 8, 10 — pistons, 9, 11 — flat valves, 12 — rod, 13 — shim, A, B, C — outlets

self-contained circuits of the air system. As the air pressures in outlets C and B get equal to that in outlet A, non-return valves 9 and 11 close.

If the pressure drops in outlet B due to derangement of tightness of the main line connected to this outlet, piston 10 actuated by the pressure difference in outlets C and B shifts towards outlet B. Now, valve 9 is pressed to piston 8. Central piston 10 is limited when it thrusts against the rotor. Flat valve 9 is held closed due to spring 7 action till the preset pressure is present, that is about 560—600 kPa (5.6—6.0 kgf/cm²). If the pressure of air supplied to outlet A exceeds the above value, valve 9 opens by-passing surplus air through outlet B to untight brake main line filling this line, if it has been repaired. The same process takes place if tightness is deranged in the main line connected to outlet C.

Trailer brake control valve, shown in Fig. 111, is designed for controlling the trailer brake drive single-line system, and also for limiting the pressure of compressed air supplied to the trailer brake air system up to the preset value.

From the air reservoir compressed air is supplied to outlet V. If the brake is released, spring 9 holds diaphragm 10 together with rod 12 in the lower position. Exhaust valve 13 is closed and intake valve 2 opened: air flows to outlet A connected with the trailer brake control main line. As the pressure in this line rises to about 500—520 kPa (5.0—5.2 kgf/cm²), lower piston 14 comes down, so shutting off intake valve 2.

The pressure in the main line is adjusted by means of screw 1 that changes the force of spring 15.

When the brake is applied, compressed air flows to outlet Z of the valve filling chamber 7 lifting the diaphragm with rod 12 and opening exhaust valve 13. From the trailer brake control main line compressed air is discharged to atmosphere through

the hollow rod and outlet *B* in the cover. Stepped piston *5* follows coming down as the pressure drops in outlet *Z* and in chamber *II*, forcing down rod *12* and closing relief exhaust valve *13*.

As the pressure rises in outlet *Z*, compressed air is exhausted fully out of the connecting main line, and the trailer brake is applied.

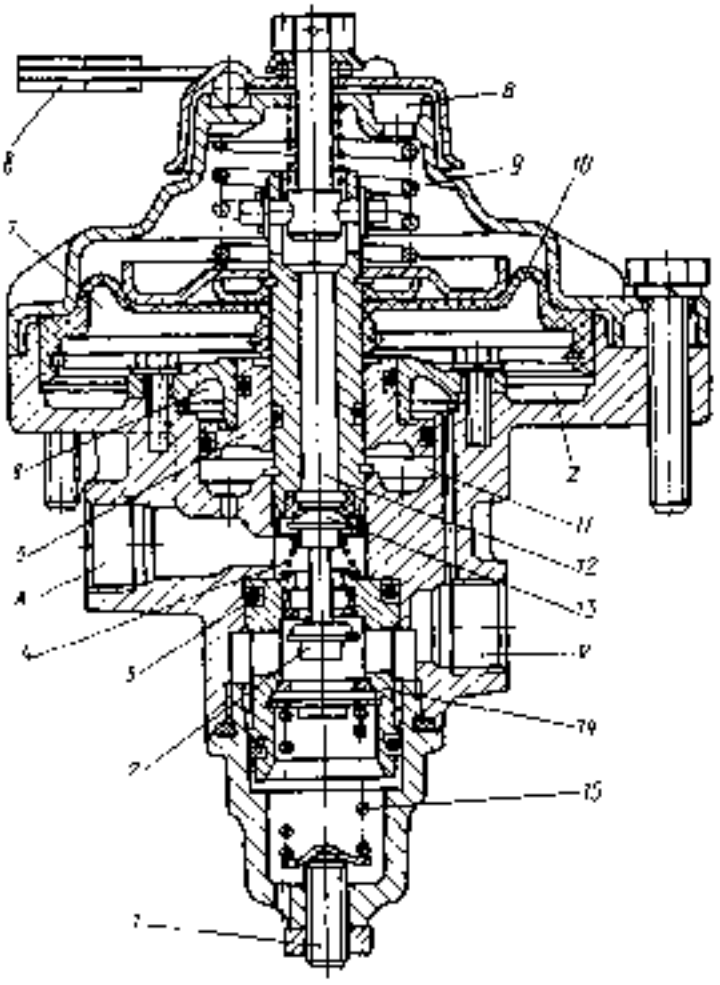

Fig. 111. Trailer Brake Control Valve.

1 — exciting screw; *2* — intake valve; *3* — piston ring; *4*, *7* springs; *5* — stepped piston; *6*, *10* — follow-up adjustment screws; *8* — working piston; *9* — lever for trailer single-line brake drive; *11* — diaphragm; *12* — rod; *13* — exhaust valve; *14* — lever; *15* — outlet to trailer main line; *B* — outlet to atmosphere; *V* — outlet to air reservoir; *Z* — outlet to brake valve.

The trailer valve has lever *8* that, when the parking brake is actuated, lifts rod *12*, opens exhaust valve *13*, and compressed air flows out of the trailer main line through outlet *B*.

Control valve of trailer brakes with double-line drive (Fig. 112). The air is constantly supplied to the control valve, to outlets *II* and *V*. The air supports rod *12* in the lower position via diaphragm *11* and piston *10*, while piston *4* is backed by spring *6* in the top position. Piston *7* with opened exhaust valve *9* is located in the top position together with piston *4*. Inlet valve *3* is closed, but outlet *IV* communicates with the atmosphere via relief valve *2*, hollow rod *12* and outlet *VI*.

The trailer is braked when the air is expelled through outlet *IV* into the trailer main line, when the air is fed to outlets *I* and *III*, and also when the air pressure drops in outlet *II* (braking with the parking brake).

When the air is fed to outlet *III*, pistons *4* and *7* move downwards, shut off exhaust valve *9*, and open inlet valve *3*. The air from the reservoir through outlet *V*, opened inlet valve *3* passes to outlet *IV*, which is connected to the controlled main line of the trailer with the help of coupling head *20* (see Fig. 104), also the air passes to the control valve of the trailer brakes with single-line drive.

The follow-up action begins when the force of spring *6* (see Fig. 112) and air pressure on piston *7* from downwards become balanced. Under this condition the pressure of the air fed to outlet *IV* is proportional to the pressure of air fed to outlet *III*.

When braking is ceased, air is expelled from outlet *III* into the atmosphere via the brake valve. Pistons *4* and *7* return into their initial position (due to spring *6* and air pressure in outlet *IV*) by opening exhaust valve *9*, while the inlet valve is shut off by spring *4*. At that moment outlet *IV* communicates with the atmosphere via relief valve *2*, hollow rod *12* and outlet *VI*.

When the air is fed to outlet *I*, diaphragm *11* with rod *12*, piston *10* and with valve *3* moves upward, hereat exhaust valve *9* is shut off, while inlet valve *3* is opened. The air from the reservoir passes into outlet *IV* and control main line of the trailer.

The follow-up action begins, when the forces, acting on diaphragm *11* from below and on piston *10* from above, are balanced.

When braking is ceased, the air from outlet *I* is expelled into the atmosphere via the brake valve. Diaphragm *11* with rod *12*, piston *10* returns to the initial position, hereat inlet valve *3* shuts off, while exhaust valve *9* is opened. At that moment the air from the control main line of the trailer via outlet *IV*, relief valve *2*, hollow rod *12* and outlet *VI* is expelled into the atmosphere.

During simultaneous feed of air to outlets *I* and *III* and when braking is ceased, the sequence of operation of the drive, described above, is performed simultaneously.

When braking with the parking brake, control valve *7* (see Fig. 104) is actuated, hereat the air from outlet *II* (see Fig. 112) via the control valve is discharged into the atmosphere. Simultaneously with the air discharge from outlet *II* and from the cavity over the diaphragm, piston *10* with rod *12* under the air pressure action (the air comes through outlet *V* from the reservoir) moves upward opening valve *3*, thus delivery of air via outlet *IV* to the trailer control main line is ensured.

The follow-up action begins when the forces acting from the air pressure on diaphragm *11* from above and on piston *10* from below, balance. To ensure advance or retardation of the trailer braking relative to the truck braking, screw *5* is turned in from below into piston *7*, this screw changes prestension of spring *6*. When the force of spring *6* increases, the air pressure in outlet *IV* rises, as compared to the air pressure supplied to outlets *I* and *III* within 20–100 kPa (0.2—1.0 kgf/cm²) (thus the trailer braking advance is achieved.

Trailer brake control valve (Fig. 113) is designed for the trailer brake control, when the truck is braked

by means of the parking brake. This valve is connected with the lever of the parking brake by means of a tie rod equipped with the spring compensator. With the parking brake lever lowered, the air from the reservoir via the control valve passes to outlet *II*

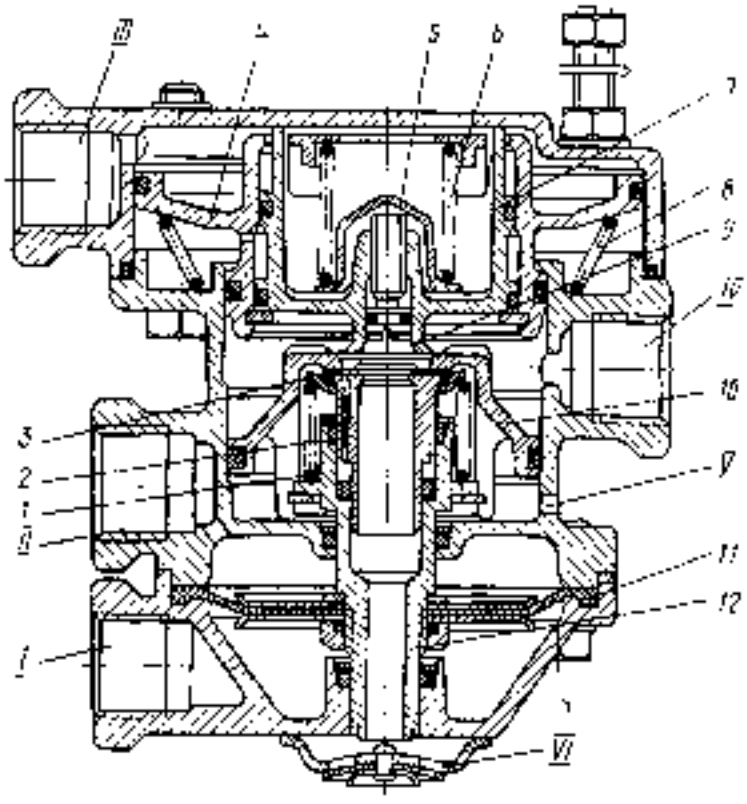

Fig. 112. Control Valve with Trailer Brakes with Double Line Drive:

[illegible]

(see Fig. 112) of the control valve of the trailer brakes with the double line drive. When the parking brake is engaged, slide valve *9* (see Fig. 113) of the control valve is shifted; furthermore, the trailer brake drive operates, as described above.

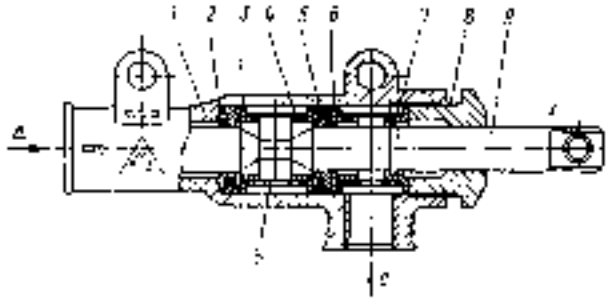

Fig. 113. Trailer Drive Control Valve

[illegible]

Three coupling heads with shut-off valves.

The heads are provided with the covers which protect the system from getting dust and dirt the re'r

Coupling head *19* (see Fig. 104) is painted black. The cover of feeding head *17* is painted red, that of control head *20* is painted blue. For correct coupling of the trailer (semi-trailer) braking system, connect the heads to suit their colour.

After connecting the truck and trailer (semi-trailer) heads, open shut-off valves *16* by turning the lever along the valve body.

For disconnection of the pneumatic lines running to the trailer, turn the levers of the shut-off valves perpendicular to the valve.

In case of emergency disconnection of the trailer from the truck in running, the coupling head (for single-line drive), two heads (for double-line drive) disconnect automatically the pneumatic system, hence the trailer (semi-trailer) braking system becomes engaged.

Check outlet valves (Fig. 114) are intended for determination of output parameters of the air pressure over the circuits with the use of pressure gauges. For connection to the valve use the hoses with union nut M16×1,5 and the pressure gauges with the measurement range of 0—1000 kPa (0 - 10 kgf/cm²) of 1.5 accuracy class.

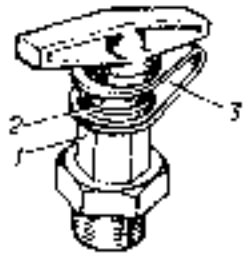

Fig. 114. Check Outlet Valve

[illegible]

The check outlet valves are installed:

— in the circuit of the front axle service brakes on the brakes front booster of the truck run;

— in the circuit of the rear bogie service brakes on the second brakes air booster;

— in the circuit of the trailer brakes, auxiliary brake and consumers on the third air reservoir (installed outside on the frame right-hand side member).

Servicing the air-hydraulic drive. Units and assemblies of the air-hydraulic drive of the brakes do not need special servicing or readjustment. If need be, such operations may be carried out by specialists at repair shops.

The air system is checked for tightness if the pressure drops in the system when the brake pedal is depressed or released. Hence, the pressure in the system must be 700 kPa (7 kgf/cm²), minimum. Check that, after the engine has been stalled and the brake pedal is released, the pressure gauge pointers do not swing noticeably. The same should take place when the brake pedal is depressed completely and held in this position during 15—20 s.

Thereat the air leakage of the braking system hydraulic portion is simultaneously checked, the brake alarm indicator of BK503 switch should not light.

For checking the stop light, depress the brake pedal when the air system is under pressure.

For checking the brake alarm indicator, proceed as follows:

— test pilot lamp *3* (see Fig. 15);

— slacken the nuts which fasten the conductor to switch BK-503;

— screw the switch out of the air booster and tighten the conductor fastening nuts;

— energize the instruments and ground the switch casing, depress the button till it goes.

— check that pilot lamp 3 glows on the instrument board, thus showing that the warning indicator is in good repair;

— do the same with the other switch.

If the switch fails, replace it.

To check the serviceability of the air drive:

— connect the test pressure gauges to the check outlet valves;

— fill the air system with the air until the pressure governor operates. At that, the pressure in the brake drive service circuits should be 650—800 kPa (6.5—8.0 kgf/cm²) as indicated on the two-pointer pressure gauge in the driver's cab. The test pressure gauge installed on the third air reservoir also reads the same pressure;

— depress the brake pedal fully; in this case the air pressure on the test pressure gauges installed on the brakes air boosters should be equal to the pressure in the system. The difference in pressure gauges readings should not exceed 50 kPa (0.5 kgf/cm²).

For checking the brake units:

1. Check pressure at the outlet from both sections of the brake valve and test the double safety valve. For this purpose, connect the check pressure gauges in the brake valve main line and air booster and, if the instruments read 650—800 kPa (6.5—8.0 kgf/cm²) of the pressure in the system, depress the brake pedal till it goes. The air pressure indicated by the test gauges must be equal to that in the system (as indicated on the two-pointer pressure gauge). Then, adjust the pressure in the system to 800 kPa (8 kgf/cm²) and check that the pressure governor operates; then stop the engine and bleed air out of the front axle circuit air reservoir. When the pedal is depressed, air pressure equals the value indicated on one of the test gauges and 0 on the other. Then, by depressing the brake pedal in several attempts, lower the pressure down to 500 kPa (5 kgf/cm²) as indicated on the pressure gauge and start the engine. At a pressure of 560—600 kPa (5.6—6.0 kgf/cm²) check that the pressure in the front axle circuit air reservoir rises. Proceed in the same manner on the intermediate and rear axles brake circuits. If the check pressure gauge fails to indicate the pressure value equal to that in this circuit reservoir when the brake pedal is depressed, check and readjust the brake pedal in free and fuel travel.

2. Test the single safety valve. Connect a check pressure gauge to reservoir *13* (see Fig. 104) after discharging air out of the three reservoirs. Then fill the reservoirs with compressed air comparing the indications on the two-pointer pressure gauge available on the instrument board and on the test gauge. Check that compressed air flows to reservoir *4* as the air pressure in reservoirs *10* and *11* rises to 560 kPa (5.6 kgf/cm²).

3. Check the pressure value in the coupling head. For this purpose, connect a check pressure gauge to the coupling head via a head type *B* and a hose. Fill the brake system with compressed air up to the pressure when the compressor falls out and open the shut-off valve. Check that the check gauge indicates 500—520 kPa (5.0—5.2 kgf/cm²). Then depress the brake pedal or apply the parking brake. Now check that the test gauge indicates 0. For ensuring normal operation of the air drive system, drain regularly condensate from air reservoirs, if air is present in the system. In cold weather drain condensate when driving out of the warm garage. On draining the condensate fill the system with air compressed to the rated pressure.

At an ambient air temperature below 0°C and in case the truck is not parked in a garage, see to it that the condensate is drained from the air reservoirs. In case the condensate is frozen, it is necessary to warm the frozen sections with hot water or vapour.

Do not use an open flame (torch, solder lamp or the like) for heating the units.

When filling the hydraulic system with fluid and when pumping through the brakes, check that the truck air system is under pressure. Before filling, remove soil from the brake main cylinders and tanks. Then, after removing the sealing tube and screwing off the filler plug, fill the tanks with brake fluid and remove air out of the hydraulic system. For pumping through the brake main cylinders and wheel brake cylinders:

— remove the rubber cap off the main cylinder by-pass valve, fit the tube to the valve (the tube is available in the set of tools), dip the tube open end in the brake fluid filled in a vessel containing 0.2 ltr in capacity up to the middle height;

— screw out the by-pass valve through ½—¾ of a turn, then depress the brake pedal in several attempts (depress abruptly and release slowly). Do it repeatedly until no air bubbles come out of the tube dipped in the vessel containing brake fluid. When pumping through, add fluid in the tanks so as to guard the system against air;

— after depressing the brake pedal, turn in tightly the cylinder by-pass valve, remove the tube and put on the cap;

pump through the wheel brake cylinders in the following sequence: middle left, rear left, rear right, middle right, front right, front left;

— after pumping through all the cylinders, add fluid in the tanks up to the level of about 15—20 mm lower the filler upper edge and screw on the filler plug.

For changing the brake fluid, disassemble the wheel and main cylinders and flush the working surfaces of the parts. When reassembling the wheel cylinders, coat the piston and cylinder inner surfaces with brake fluid. To enhance corrosion-resistance of the wheel cylinders, pack lubricant ЛТ-1 under each protective cap on the cylinder face in the quantity of 4—5 g.

If air is possibly entrapped in the brake system hydraulic part or clearances between the brake shoes and drums are wide, brake the truck by depressing the brake pedal in double or multiple attempts with intervals of 2—3 s in duration.

Stand-by Brake System

One of the service brake circuits functions as a stand-by system. Should it happen that one of the circuits fails, the stand-by brake system could brake the truck with sufficient degree of efficiency.

Parking Brake System and Its Drive

The parking brake is of drum type with two inner shoes *8* (Fig. 115). The parking brake drive is coupled to lever *6* (see Fig. 111) of the trailer brake control valve by means of rod *5* (see

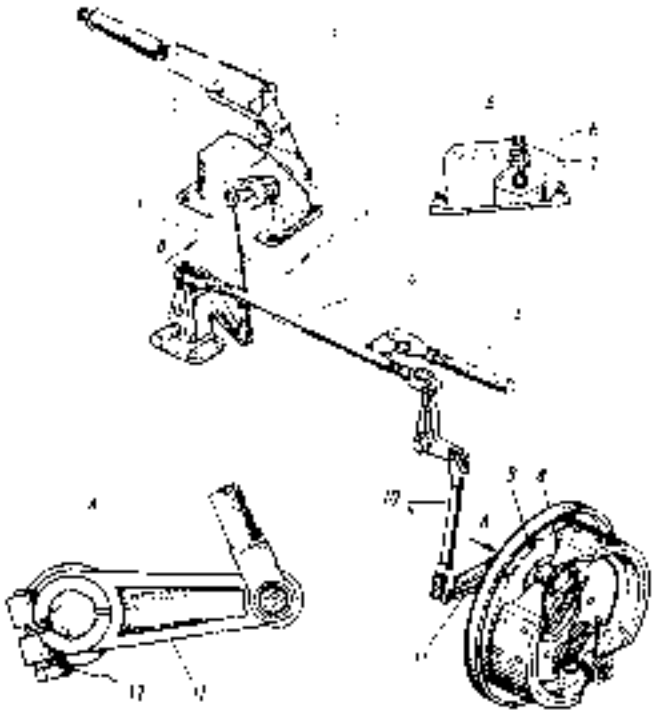

Fig. 115. Parking Brake Drive

1 — parking brake lever; 2 — pawl; 3 — quadrant; 4, 10 — drive rods; 5 — trailer valve drive rod; 6 — parking brake pilot lamp switch; 7 — shims; 8 — brake shoe; 9 — expansion cam; 11 — adjusting lever; 12 — coupling bolt

Fig. 115). Owing to this, braking of the truck with the parking brake engages also the trailer brake system which is actuated from the truck air system.

This brake should be used for parking only. It may be used for stopping the running truck in emergency cases only.

As the parking brake linings wear, stroke of lever *1* increases. When pawl *2* engages the last but one tooth of quadrant *3*, adjust the clearances between the brake shoes and drums. For this purpose, set the parking brake lever in the lowermost position and adjust the lever stroke by shortening the length of rod *4*. In this case expansion cam *9* turns, moves the shoes apart and decreases the clearances between the shoes and the drum. When lever *11* is turned through a large angle, the parking brake efficiency deteriorates. To restore the brake efficiency, act as follows:

— remove the parking brake;

— take the drum on the brake removed, determine the angle of the lever turn by turning lever *11* until it thrusts the shoes. When the lever is turned through 15°, undo bolt *12* and shift the lever relative to cam *9* clockwise for two teeth (on the shield side); when the lever is turned through 30°, shift the lever for four teeth, in turning the lever through 45°, for six teeth;

— screw in bolt *12*;

— reinstall the parking brake and connect rod *10* to the adjusting lever;

— adjust clearances 0.3—0.6 mm between the shoes and the drum using a feeler gauge inserted through the ports in the brake bablle.

With correctly assembled and adjusted brake, and lever *1* in the cab, lever *11* should be inclined downwards from the top flange of the side member by an angle of 15—30°.

The extension of drive lever *1* shaft mounts switch BK-403A indicating application of the parking brake. When the pawl of lever *1* is set to the 2nd—4th tooth of the quadrant the pilot lamp should light up on the instrument board. The moment of the switch closing is adjusted by varying the number of shims *7* available under the switch.

If the linings are worn to the rivets, replace the linings.

Auxiliary Brake System

The compression-type auxiliary brake is designed for speeding down the truck when it comes downgrade in along trip. When this brake is applied, counter pressure is built in the engine gas exhaust ducts if shutters are engaged.

The brake consists of casing *3* (Fig. 116) and shutter *4* controlled by a lever.

The shutters are driven by air cylinders *3* (see Fig. 57) secured on the brake casing by means of brackets *4*.

For applying the brake, depress the auxiliary brake control air valve button available on the cab

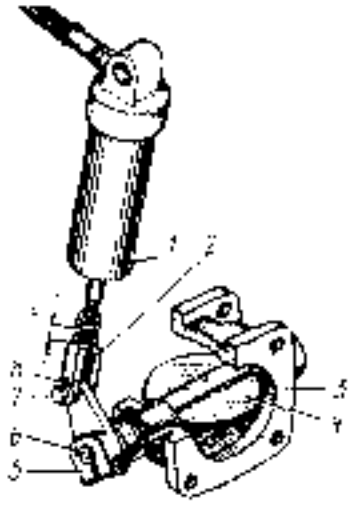

Fig. 116. Auxiliary Brake:

1 — air cylinder; 2 — rod lever; 3 — casing; 4 — shutter; 5 — shutter shaft lever; 6 — key; 7 — pin; 8 — cotter; 9 — n

flow. Compressed air is supplied in the air cylinders, the pistons move closing the shutters. Simultaneously a signal is given to the trailer brake drive, and the trailer is braked somewhat.

When you slow off the valve button, the air flows to the atmosphere from the cylinders, the rods backed with return springs, turn the levers and the shutters in the initial position.

The balanced drive shuts off the fuel feed simultaneously with application of the auxiliary brake. The fuel-feed shut-off air cylinder is similar in design with the auxiliary brake air cylinder.

When driving the truck with the auxiliary brake applied:

— check that the engine crankshaft does not speed in excess of 2600 min^{-1};

- do not shift the gears in the gearbox from a higher to a lower speed when the engine crankshaft runs at a speed of about 2000 min^{-1}.

If need be, speed down the engine crankshaft applying the wheel brakes and by shifting the gears to a lower speed.

If auxiliary brake shutter 4 (see Fig. 116) turns hard, dismantle the brake casing with the shutters, wash in kerosene and blow through with compressed air. If air cylinder rods are seized or if the valve button is jammed, disassemble the components, wash them in kerosene, replace damaged parts, coat friction surfaces with lubricant and refit.

When readjusting the shutters, change screw-off length L of the air cylinder rod with its tip.

If the shutter has been set correctly, check that the key is set along the intake pipe axis when the air cylinder piston is in the extreme upper position.

ELECTRICAL EQUIPMENT

The electrical system is wired as a single-conductor circuit in which the negative terminals of power sources and consumers are grounded to the truck body. The negative terminal of the storage battery is grounded by means of a distance switch.

Power sources are: two storage batteries connected in series and a generator that operates in conjunction with a voltage regulator.

The units and instruments included in the circuit are connected through wire conductors coated with p.v.c. insulating material of different sectional area.

For easy location and assembling of wires in bunches, they have a definite colouring. Individual wires may be of any colour. Wire colour is marked with the colour name first letter mark on collars provided on wire both ends. Colouring of wire conductors of the truck is listed in Appendix 4.

In the Ural-4320-02 truck the circuit is wired as shown in Fig. 117 (insert). Captions to Fig. 117 are listed in Table 3.

The truck has mechanically-driven speedometer. To prevent breakage to the flexible shaft (ГВ28П), in mounting and dismantling the instrument board, place the shaft so that a red paint mark on the shaft sheathing is outside the cab directly after the sealing bush of the hole for the shaft, and the shaft should have no loops behind the instrument board.

In the Ural-4420-02 or Ural-44202-02 bolster trucks the head floodlight for illuminating the bolster arrangement is mounted on the cab rear panel. The Ural-44202-02 bolster truck has no front headlight.

In the Ural-43202-02 and Ural-44202-02 trucks light-signal instruments are mounted in non-light enclosures: cab heater capacitor, capacitor filter 11.7904, preheater motor capacitor, tyre pressure gauge with an illumination lamp are not mounted.

Generator

The a.c. water-proof generator (Fig. 115) is designed as a 12-pole synchronous machine having a built in rectifier unit type ВБГ 7Г or 511137-100 with plenum ventilation.

Table

Electrical Units for Ural-4320-02 Truck

Item in Fig. 117	Description	Type or No of article
1	Front light	ПФ133-АЛ
2	Headlamp	401.3711
3	Fog lamp	ФГ152*
4	Side turn signal flasher	УП101-51
5, 96	Connecting panel	17.3723
6	Starting preheater motor	МЭ252
7	Underhood lamp	ПЛ290Б
8	Solenoid valve of glow plug preheater	11.3741
9	Torch plug of glow-plug preheater	11.3710
10	Coolant temperature pickup	ТМ-00А
11	Oil level feeling pickup	—
12	Oil pressure emergency drop pick-up	ММ111Д
13	Oil pressure pickup	ММ370
14	Starting preheater spark plug	СН123
15	Coolant overheating alarm pickup	ТМ111
16	High voltage source	ТК137А
17	Fuel heater of starting preheater	11.37-1100
18	Starting preheater solenoid valve	ПЭК030-01(5501-01)
19	Generator	Г288Е
20	Starting preheater motor switch	46.3710
21	Starting preheater plug switch	ВК156М
22	Fuel heating switch	ВК146М
23	Starting preheater solenoid valve switch	46.3710
24	Starter	СТ142-Б
25	Voltage regulator	112.3702
26	Capacitor filter	11.7904
27	Voltage regulator switch off relay	11.3747
28	Torch plug relay	11.3747
29	Added resistor with electrothermal relay	12.3741
30	Battery switch off interlock relay	11.3747
31, 90	Portable lamp socket	47К
32	Headlamp fuel switch	ПК3
33	Thermob metal fuse	ПР3
34	Capacitor filter	11.7904
35	Head floodlight	171.3711
36	Portable lamp socket	ПК400
37	Starter engaging relay	РС520
38	Auxiliary brake relay	11.3747
39	Heater motor resistor	СЭ300
40	Turn indicator flasher relay	РС957А
41	Auxiliary brake alarm switch	ММ125Д
42	Fuse unit	ПР120
43	Heater motor	МЭ226-3
44	Cab dome lamp switch	ВК343.01.09
45	Head floodlight switch	ВК343.01.06
46	Trailer train lamp switch	ВК343.02.10
47	Link fuse	ПР119-01
48	Glow-plug preheater switch on button	11.3704
49	Emergency lighting switch	32.3710
50	Headlamp master switch	П305
51	Turn indicator switch	ПК113А-01
52	Starter and instruments switch	ВК356
53	Audible alarm (combined)	РС531
54	Instruments lighting rheostat switch	ВК116Б-01

Item in Fig. 117	Description	Type or No of article
55	Battery cut-out button	11.3704
56	Starter interlocking relay	2512.3747
57	Cab heater switch	Г147.03.11
58	Fog lamp switch	ВК343.01.03 *
59	Tyre pressure gauge	МД-01
60	Fuel reserve indicator	
61	Fuel level indicator	МБ170-01
62	Ammeter	АП171А
63	Upper beam pilot lamp	
64	Speedometer	16.3602
65	Tachometer	257.3813
66	Oil pressure indicator	МК170-01А
67	Oil pressure dispatcher	
68	Coolant temperature indicator	МК171-01
69	Double-pointer pressure gauge	61.3213
70	Parking brake check lamp switch	ВК301А
71	Parking brake relay	РС146
72	Trailer turn signal lamp	МТП-61
73	Cab dome lamp	ПЕ301-Д
74	Rear unit of pilot lamps (also works at)	ПДЕ12Е
75	— trailer turn indicators	—
76	truck turn indicators	
77	glow plug indicator engagement	—
78	Left unit of pilot lamps (also works at)	ПДЕ12Е
79	— parking brake	
80	— coolant temperature emergency rising	—
81	faulty brakes	
82	minimum air pressure in air system	—
83	— oil filter clogging	—
84	Storage battery	6СТ-190ТР
85	Battery switch	ВК660Б
86	Outer starting socket	ПС315
87	Sacking light switch	ВК416А
88	Faulty brake alarm switch	ВК503
89	Body not sealed	ВК322
90	Braking light switch	ВК126
91	Fuel level pickup	ЭМ158-Д
92	Pickup of minimum air pressure in system	ЭМ124-Д
93	Trailer plug socket	ПС300-А3
95	Underbody lamp	ФП103Б
97	Rear lamp	ФП133-А6
98	Backing lamp	2.12.1711
99	License plate lamp	ФП134Б

* Optionally

The generator has terminals: «+» — for connecting with the storage batteries and load, two terminals marked «III» for connecting with terminal «III» and «+» of the voltage regulator, terminals «III» made as two pin jack connector, «—» for connecting with the voltage regulator casing, «~» — for connection to the tachometer.

To guard the generator against breakdown, do not:

— run the engine if the storage battery has been switched off;

— disconnect the wire conductors from positive and negative terminals of the generator or if plug- and socket connectors are split on the generator and voltage regulator when the engine is running;

— check the generator assembly for performance by closing the leads of socket connector «+» and «—» on the generator and voltage regulator;

Specifications

Initial at (25±10) °C)

Rated voltage, V	28
Rated current, A	47
Rated output, W	1000
Rotor rotational speed at 28 V, min⁻¹:	
at no load	1160
loaded with 20 A, maximum	1900
Maximum rotational speed, min⁻¹	8000
Exciting current, A	1.6±0.1

— test the generator by connecting a pilot lamp or a megger.

— connect the storage battery if its terminals are reversed or if the generator positive terminal has been connected with the negative one of the storage battery;

— short circuit of terminals «+» and «III» on the voltage regulator.

Keep the generator clean. Clean it from dust by blowing through with compressed air.

When checking the generator, refer to indications of the ammeter. If the engine crankshaft runs at an average speed, check that the current indicator reads the charging-current value that goes down on restoring the storage-battery charge. If the storage battery is charged fully and correctly the generator is sound and the controlled voltage is selected properly, the ammeter pointer should indicate «0» and light charging current.

For repairing the generator, handle it over to specialized repair shop.

For inspecting the brush assembly, remove the brush holder. Check that brushes slip easily in the holder. Replace a brush if its height is less than 5 mm. Check that the pressure of brushes on the commutator, if the spring is compressed to 17.5 mm, is about [(0.220÷0.03) N [(22±3) gf]. If the slip rings are worn in excess of 0.5 mm in diameter, turn them on the lathe. The minimum diameter of turning is 29.3 mm.

The ball bearings are manufactured fully lightened, packed with grease for the entire service life. If jamming is sensed or if abnormal noise is heard, replace faulty bearings.

For checking the generator on the truck, use a d.c. voltmeter of at least 1.5 class of accuracy. Connect the voltmeter between terminals «—» and «+» on the generator, after the storage batteries have been connected, when the engine crankshaft runs at 2000 min⁻¹. After 10 min of operation of the engine, switch on the headlamps for distance light and note down the voltmeter indication which should be 27.6÷29.2 V.

For checking the generator on a bench, ensure that the rotor speed could be adjusted slowly down to 5000 min⁻¹, having a measurement instrument of at least 1.5 class of accuracy. The circuit for bench check of the generator is shown in Fig. 119.

The electrical data should meet the specifications.

The generator could fail due to breakdown of the rectifier unit. The latter must be tested if the generator has been disassembled after the stator winding is disconnected.

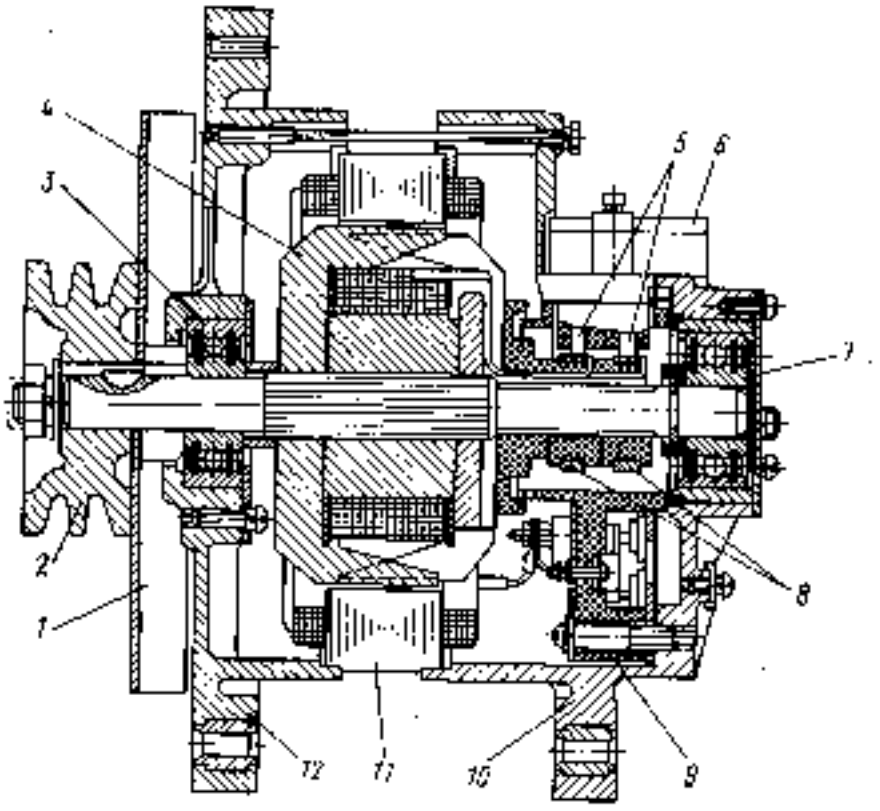

Fig. 118. Generator.

1 — fan; 2 — pulley; 3, 7 — ball bearings; 4 — rotor; 5 — brushes; 6 — brush holder cover; 8 — slip rings; 9 — rectifier unit; 10 — cover at slip ring end; 11 — stator; 12 — cover at drive end

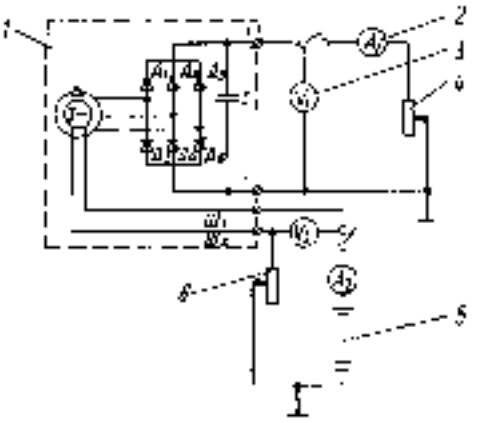

Fig. 119. Circuit for Bench Check of Generator Electric Data

1 — generator; 2 — ammeter; 3 — voltmeter; 4 — load; 5 — storage battery; 6 — series resistor

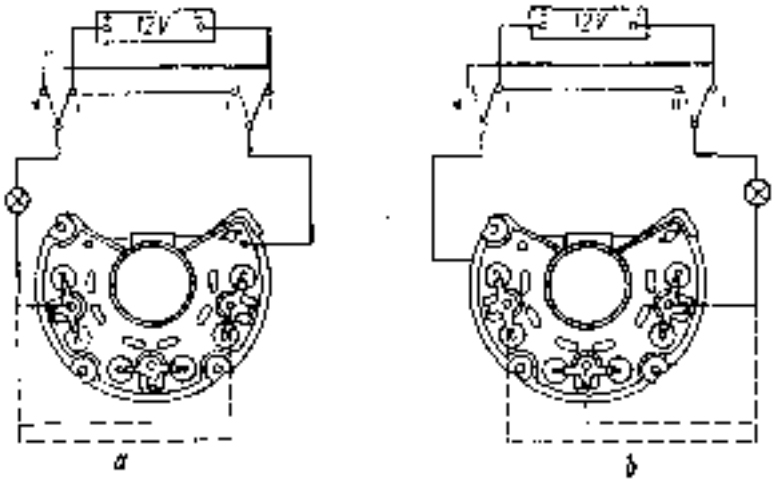

Fig. 120. Circuit for Check of Rectifier Unit:

a — checking of plus diodes; b — checking of minus diodes; 1 — diodes are connected for non-conducting; 2 — diodes are connected for conducting

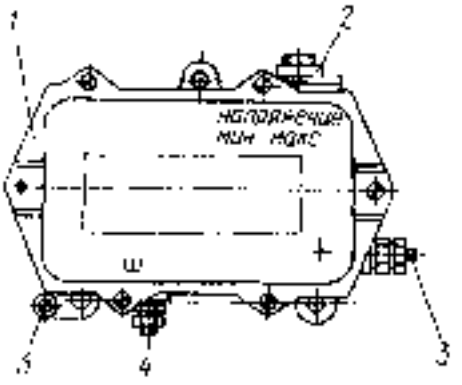

Fig. 121. Voltage Regulator:

1 — regulator casing; 2 — switch stopper; 3, 4, 5 — terminals

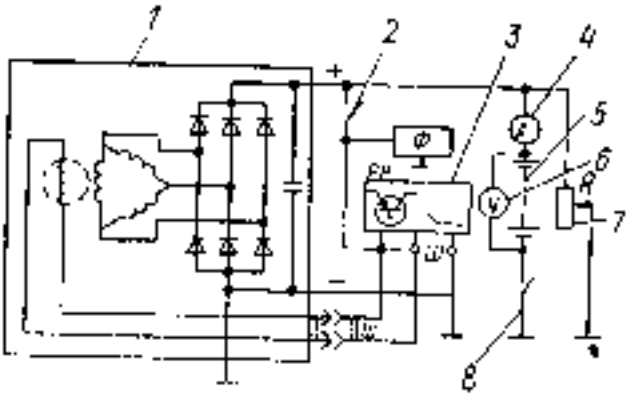

Fig. 122. Connecting Circuit for Voltage Regulator and Generator for Checking Regulated Voltage on Bench:

1 — generator; 2 — ignition switch; 3 — voltage regulator; 4 — ammeter; 5 — storage battery; 6 — voltmeter; 7 — load; 8 — ignition switch

For testing the rectifier unit, connect the storage battery or unit leads via a pilot lamp. For checking the plus diodes connected to the rectifier unit «plus» bar (Fig. 120), connect the storage battery wire and the other wire via the pilot lamp in sequence — to the diode leads. For checking the minus diodes, connect the storage battery to the «minus» bar and the pilot lamp, to the diode leads. Mind that correct diodes of the rectifier unit connect in one direction only; consequently, the lamp glows if the diodes are connected for conducting. Check that, if the lamp glows or if it fails, when the lamp has been connected for this or that direction, the diodes unit is faulty. If diodes are found faulty, replace the rectifier unit. Do not test the rectifier unit connected to a voltage source of more than 24 V or to an a.c. source without the pilot lamp.

When mounting the generator on the engine, remember that the generator fastening rear bolt on the bracket is secured in a split-type support and that the generator front cover foot is secured without a clearance. Therefore, when mounting the generator, before tightening the bolts, slacken the split type support bracing bolt, tighten the fastening bolts on the generator and tighten the bracing bolt on the generator rear support.

When disassembling the generator, proceed as follows:

— turn out the two screws which fasten the brush holder and remove the holder;

— turn out the bracing bolts and remove the cover from the slip-ring end in assembly with the stator;

— undo the nuts which fasten the phase wires from the rectifier unit and separate the stator from the cover;

— undo the nut that fastens the pulley and remove the pulley, fan and supporting bush. Remove the cover off the shaft.

For reassembling the generator, proceed in the reverse sequence of operations.

Voltage Regulator

The contactless voltage regulator with two levels of adjustment is designed for maintaining constant voltage in electric circuits of the truck. It is made as a unit having semi-conductor elements.

For adjusting the voltage, use the switch available in the regulator upper part (Fig. 121). The switch is closed with stopper 2. Positions of the switch arm correspond to voltages: extreme right hand — maximum, extreme left-hand — minimum.

Voltage levels are marked on the regulator cover. Originally the regulator is adjusted for the minimum level.

If the ambient temperature is 0°C or lower, remove stopper 2 and shift the switch arm in position MAKC. (Max.) so as not to under charge the storage battery. At 0°C and higher, shift the switch arm in position MIH (Min.) so that the electrolyte does not boil away.

For guarding the voltage regulator, do not interconnect terminals «Ш» and «Ш». When connecting the wires, refer to the marks made on the generator and regulator.

For checking the controllable voltage in case of necessity:

— connect a voltmeter of not less than 1.0 class of accuracy with the dial rated 0—30, between terminal «+» and the regulator casing;

— start the truck engine and set the crankshaft rpm at a medium speed;

— load the regulator by switching the headlamps for distance light and note down the voltmeter indication.

The voltage adjusted at (20±5) C must be (27.5±0.7) V at the first level MIH. (Min.) and (29±0.7) V at the second level MAKC. (Max.).

When checking on a bench (Fig. 122), the generator rotor speed at which the controllable voltage is tested should be 3500 rpm and load current 14 A. If the voltage goes beyond the specifications, replace the regulator.

Storage Batteries

The storage batteries are used on the truck for powering all the electric current consumers when the engine is off or running at low rpm and also for powering consumers together with the generator when the consumed current exceeds the value permissible for the generator.

Specifications

Rated voltage, V	12
Capacity at 20-h discharge rate and electrolyte temperature of —25°C, A·h	190
Discharge current at 20-h discharge rate, A	9.5
Total amount of electrolyte in battery, l	12
Charging current, A	19
Mass of battery with electrolyte, kg	71

The truck is delivered with the storage battery in working condition. To a special request the truck may have dry-charged cells which will store the charge during one year beginning from the date of manufacture.

Storage batteries *1* (Fig. 123) are installed in container *10* on two side supports and a middle support. The batteries are fixed in the container by two upper clamps *13* and front stop *4*. Upper clamps *13* are fixed using front *8* and rear *12* wedge stops.

Front wedge stops *8* are made adjustable and are secured on container cover *7* with bolts *9*. Rear stop *12* is welded to the top rear part of container *10*. The top panel of container *10* has welded-on guides *11* for correct setting of clamp *13* relative to stops *8* and *12*.

When attending to the storage batteries on the truck and for removing the batteries from the truck:

— disconnect the batteries from the truck circuit by opening the battery switch;

— remove spring rings *6* of cover *7* locks and release the locks;

— for attending to the batteries on the truck, do not take off cover *7* from the truck. Raise it a little and hinge out onto stop *3*. Make sure that cover *7* is secured reliably in the horizontal position.

For removing the batteries from the truck, take off cover *7* from the truck, for which purpose raise the cover and turn it simultaneously relative to clamps *2* or the bottom panel of container *10*;

— if the truck is equipped with batteries

6CT-190TP, remove protective casings from the terminals.

— disconnect conductors running to the starter and to the battery switch, remove the connector from the batteries. If the truck is equipped with batteries 6CT-190TP, it is allowed to loosen fastening of the conductors and the battery connector when the batteries are serviced on the truck;

— take front stop *4* out of container *10*, for which purpose raise one end of stop *4* until it leaves reinforcing angle-piece *5* of container *10*.

If front stop *4* is pinched between battery *1* and reinforcing angle-piece *5*, push the batteries into the container as far as they will go and then take out stop *4*.

If conductors are left attached to the 6CT-190TP battery, raise the handles of battery *1* together with the conductors and, holding them in this position, withdraw stop *4*;

— take upper clamps *13* out of container *10*. If clamp *13* is pinched between battery *1* and rear wedge stop *12*, withdraw clamp *13* using a screwdriver or a drift pin and inserting them into the hole in clamp *13*;

— for servicing the batteries on the truck, move the batteries in turn onto hinged cover *7* of the container.

When the batteries are to be removed from the truck, move one battery onto stop *3* and take off the truck. Then move the other battery onto stop *3* and take it off.

When moving batteries *1* out of container *10* onto stop *3* and when taking the batteries off the truck, take care that the battery does not fall down.

Install and secure the batteries on the truck in the reverse sequence of operations.

See to it that upper clamps *13* are installed with their bevel part facing upward. Fit upper clamps *13* into guides *11*. Otherwise, clamp *13* will not interact with wedge stops *8* and *12* and the battery will be left unfixed, this causing breakage of the battery. Avoid deforming guides *11* when mounting and fixing the batteries.

If the truck is equipped with batteries 6CT-190A, pass the conductors running to the starter and to the battery switch through the slot in upper clamp *13*.

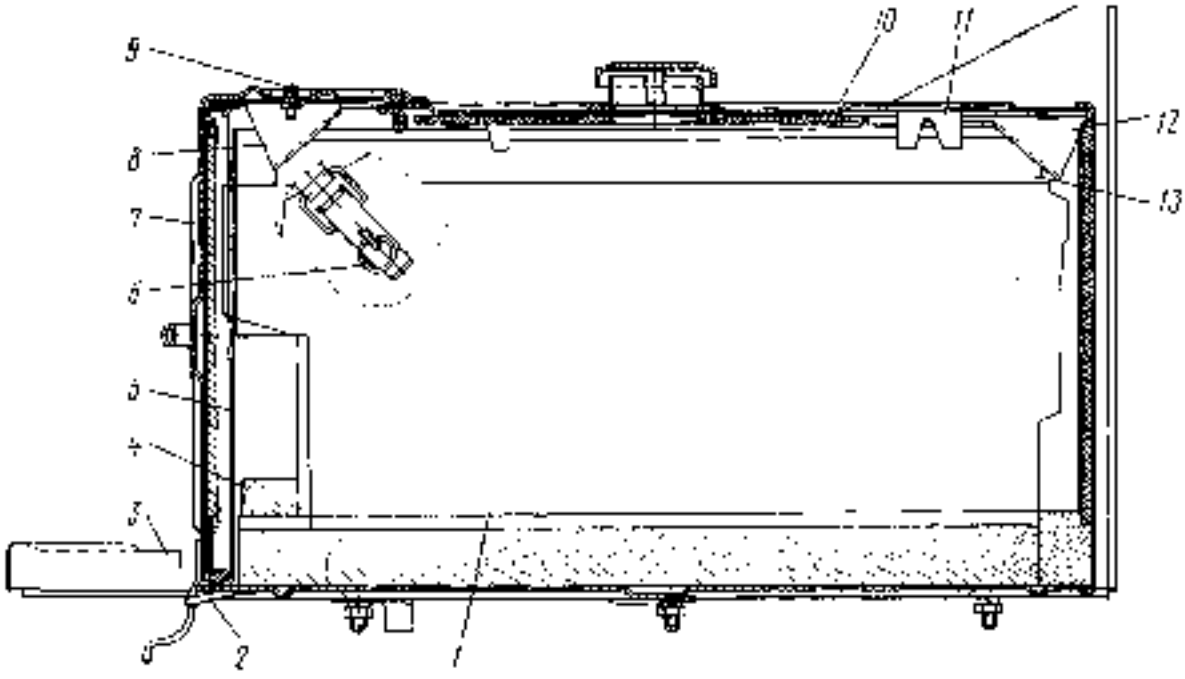

Fig. 123. Storage Battery Setup

1 — battery; *2* — clamp; *3* — footstep; *4* — front stop; *5* — reinforcing angle-piece; *6* — spring ring; *7* — container cover; *8*, *12* — front and rear wedge stops; *9* — bolt; *10* — container; *11* — guides; *13* — upper clamp

When mounting and fixing the batteries, avoid pinching and kinking of the conductors running to the starter and to the battery switch, bending of lugs, and also harmful contact of conductors with metal parts of the container.

Upon mounting the batteries on the truck, adjust the position of front wedge stops *8*, for which purpose loosen bolts *9* that fasten stops *8* to cover *7*, shift stops *8* in the slits of cover *7* from yourself as far as they will go, and tighten bolts *9*. Adjust the position of front wedge stops *8* on closed cover *7* of container *10*, with batteries *1* and upper clamps *13* installed in container *10*.

Battery charge. To bring the dry-charged battery to the working condition, extend it from the container as stated above, unscrew plugs from filler holes, remove sealing gaskets and clear out vent holes in plugs. In polyethylene plugs with a protrusion, cut off the latter, clear out the vent passages, pour in electrolyte of the density given in Table 1.

Electrolyte is prepared by dissolving battery sulphuric acid to GOST 667—73 (not commercial grade) in distilled water to GOST 6709—72. Refer to Table 5.

When preparing the electrolyte, pour sulphuric acid into water, not vice versa.

The electrolyte temperature should be 15—30 °C.

After impregnating battery plates during 2 h, add the electrolyte to the level of about 10—15 mm above the protecting board. Check that the electrolyte temperature before filling is 30 °C, maximum.

After pouring in electrolyte, make a pause of

20—120 min and measure the density. If it drops not more than by 0.03 g/cm³ as to the initial one, the battery may be installed on the truck. If more, the battery should be charged up.

Table 4

Electrolyte Density

Climatic region. Mean ambient temperature in January, °C (GOST 16350—80)	Season	Electrolyte density reduced to 25 °C, g/cm³	
		in the cells	fully charged battery
Cold weather:			
Very cold	Winter	1.28	1.30
From minus 50 to minus 30	Summer	1.24	1.26
Cold from minus 30 to minus 15	Yearly	1.26	1.28
Temperate weather from minus 15 to minus 8	Daily	1.28	1.30
Hot weather from minus 5 to plus 4	"	1.22	1.24
Warm humid weather from 0 to plus 4	"	1.20	1.22

Note. Allowances in density: ±0.01 g/cm³

If a dry-charged battery must be rendered to working condition very quickly, it may be installed on the truck after 20 min impregnation with electrolyte with a density of (1.28±0.01) g/cm³ as reduced to 25 °C.

Table 5

Preparation of Filling of Electrolyte of Specified Density

Electrolyte density reduced to 25 °C, g/cm³	Amount of water, lb	Amount of acid of 1.84 g/cm³ density at 25 °C, lb	Amount of water, lb	Amount of acid of 1.83 g/cm³ density at 25 °C	
				lb	kg
1.22	0.490	0.522	0.889	0.321	0.404
1.23	0.461	0.549	0.829	0.331	0.424
1.24	0.436	0.574	0.819	0.341	0.444
1.25	0.410	0.601	0.809	0.352	0.464
1.26	0.384	0.628	0.800	0.363	0.484
1.27	0.357	0.652	0.791	0.372	0.503
1.28	0.321	0.679	0.781	0.385	0.523
1.29	0.302	0.707	0.772	0.396	0.541
1.30	0.279	0.732	0.762	0.405	0.561
1.31	0.246	0.761	0.717	0.415	0.585
1.32		—	0.660	0.422	0.770

At subzero ambient temperature, pour in electrolyte with a density of (1.27±0.01) g/cm³ at (40±2) °C. In this case, electrolyte should be prepared in two stages according to Table 6.

Electrolyte got on the battery surface should be removed with clean cotton waste wetted in 10 % solution of ammonia or soda ash, then wiped up with cotton waste wetted in water, and wiped dry. The batteries should be charged with direct current.

Battery plus terminal is connected to the plus pole of a source, and minus terminal — to the minus pole.

Proceed with charging until heavy gassing is seen out of the storage battery and the voltage and electrolyte density become steady during 2 h. Check voltage by a voltmeter of 1.0 accuracy class with 3 V scale and 0.02 V division value.

Table 6

Preparation of Electrolyte

Stage description	Electrolyte density, g/cm³	Amount of battery acid of 1.83 g/cm³ density
Preliminary dilution, during the time required for cooling to 15 °C or stowed in heated room	1.20—1.21 at 15 °C	0.21 lb per one litre of water
Finishing preparation right before filling	1.26—1.36 at 40 °C	0.35 lb per one litre of diluted electrolyte

In charging check that the electrolyte temperature does not rise in excess of 45 °C. When it rises to 45 °C, reduce the charging current twice correspondingly reducing the time period of charging or interrupt the process and let the electrolyte cool down to 30 to 35 °C. In the course of charging the battery check that the electrolyte density increases gradually up to the value specified in Table 4; taking into account a temperature correction listed in Table 7.

Table 7

Electrolyte Density vs Temperature Correction

Electrolyte temperature, °C	Correction for hydrometer indication, g/cm³
Higher than +45	+0.02
+15 to +31	+0.01
+30 to +20	0.00
+19 to +5	—0.01
+4 to —10	—0.02
—11 to —25	—0.03
—26 to —40	—0.04
Lower than —40	—0.05

If the electrolyte density goes beyond the specified limits, add distilled water or electrolyte of 1.40 g/cm³ density as required. On correcting (for stirring the electrolyte) proceed charging during 30—40 min.

In half an hour after completion of charging, obtain the electrolyte level to the normal, turn in the plugs, wipe the battery surface with waste, as described above. Install the cover and protective housing, install the battery on the truck.

The manufacturer brings the electrolyte density at the end of first battery charge to (1.28±±0.01) g/cm³.

Checking electrolyte level and density. The electrolyte level should be 10—15 mm above the protective board. Increase the level only by adding distilled water. In cold season, to prevent freezing, add water directly before starting the engine for quick mixing it with electrolyte. It should be added only when it is known that it was splashed out (for example at the end of charging) or tank leakage

Electrolyte density is checked by a densimeter and a pipette. Electrolyte density values are given in Table 4.

Maintenance of storage battery. In operation, regularly clean the battery, its terminals and wire shoes as dirty surfaces, oxides, loose clamps and shoes will cause accelerated discharge of the battery and prevent its normal charging. If the battery frequently or long time is in discharged or even semi-discharged state, its plates are sulphated (coated with large-crystal lead sulphate). This leads to a reduced capacity and increased internal resistance of the battery. The exposed part of plates is also sulphated due to a lower level of electrolyte.

At frequent cases of non-reliable engine starting, but at least once in three months, check the degree of battery charge as to the electrolyte density, taking into account a temperature correction listed in Table 7.

After determining the battery electrolyte density, counting for the initial density of electrolyte in fully charged battery, detect the degree of its discharge as to Table 8.

Table 8

Determining the Degree of Batteries Discharge

Climatic regions, Average ambient temperature in January, °C	Season	Electrolyte density in fully charged battery, g/cm³	Electrolyte density allowance for battery charged, g/cm³	
			by voltmeter	by densimeter
Cold weather: very cold (from minus 38 to minus 50)	Winter	1.30	1.22	1.26
	Summer	1.26	1.20	1.22
cold (from minus 20 to minus 5)	Year-round	1.28	1.22	1.24
Temperate weather (from minus 15 to minus 8)	Year-round	1.26	1.20	1.22
Hot weather (from minus 15 to plus 1)	Year-round	1.24	1.16	1.20
Warm humid weather (from 0 to plus 5)	Year-round	1.22	1.14	1.18

A battery discharged more than by 25 % in winter and more than 50 % in summer should be removed from the truck and set for charging.

If the batteries are brought to working position and not installed on the truck or temporarily removed from the truck or stored out if longer than a month, do the following

— at above-zero storage temperatures, charge up the battery every month,

at subzero temperatures it is enough to effect monthly checks of electrolyte density and charge up only when the density drops more than by 0.04 g/cm³

In this state, the batteries can be kept: at subzero temperatures — not over 1.5 year, and at above-zero temperatures — not over 9 months within the guaranteed service period.

The batteries removed from the truck after continuous operation should be charged and has the electrolyte density brought to normal according to the given climatic region, and be given a training discharge with 10-h duty current for evaluating its technical status.

Dry-charged batteries should be kept at indoor temperature of minus 40 to plus 60 °C. The plugs with sealing disks should be turned in batteries tightly, outlet bolts and nut given a thin grease coat.

Probable faults of batteries and remedies are given in the section «Trouble Shooting».

Starter

The sealed solenoid-type starter is a d.c. series-wound motor driven from a free-wheeling ratchet gear.

The starter is energized as the switch key is turned clockwise in extreme right-hand unlocked position. Right after the engine is started, set free the key.

Specifications

(at ambient temperature of (25+10) °C)	
Rated power at 1500 min⁻¹ rated capacity of storage battery 6CT-190TP, kW (hp)	7.73 (10.5)
No load current at 24 V, A, not more	140
Voltage at 50 N·m (5 kgf·m) braking torque, V, not more	8
Current at 60 N·m (5 kgf·m) braking torque and 9 V, A, not more	800
Relay pickup voltage, V, not more	16
Brush spring pressure, N (kg)	13—20.5 (1.5—2.05)
Brush length, mm	19—20

Drive *15* (Fig. 124) shifts on the shaft of armature *22* in longitudinal splines. The drive consists of housing *2* (Fig. 125) driving coupling member *4*, gear *8* with a driven coupling member, spring *3*, bush *1* with spiral splines and a mechanism used for centrifugal disengagement of the coupling member. The drive housing is packed with grease.

The traction relay contacts close only after drive gear *8* comes in full mesh with the flywheel rim.

The starter is sealed with packing elements placed at the joints of outer parts of the starter and relay. The starter motor is protected against ingress of dirt from the flywheel case with the help of collar *21* (see Fig. 124) fitted in intermediate bearing holder *18*. The traction relay is protected against dirt and water by means of bellows *12*.

The starter cover and intermediate bearing have oil reservoirs containing felts impregnated with turbine oil and closed with air-tight plugs.

Using and Servicing the Starter

When starting the engine, do not run the starter uninterruptedly for longer than 15 s and not more than 20 s at subzero temperatures. **The starter may be energized repeatedly after one or two minutes,** presetting the instrument and starter switch in position ВЫКЛЮЧЕНО (Off). If the engine fails to start after three attempts find trouble and remedy it.

For disassembling the starter:

1. Undo the nuts and remove jumper *5* (see Fig. 124) that connects the relay with the body.

2. Undo the four nuts on cover *1* at the commutator end, which fasten rocker *2*.

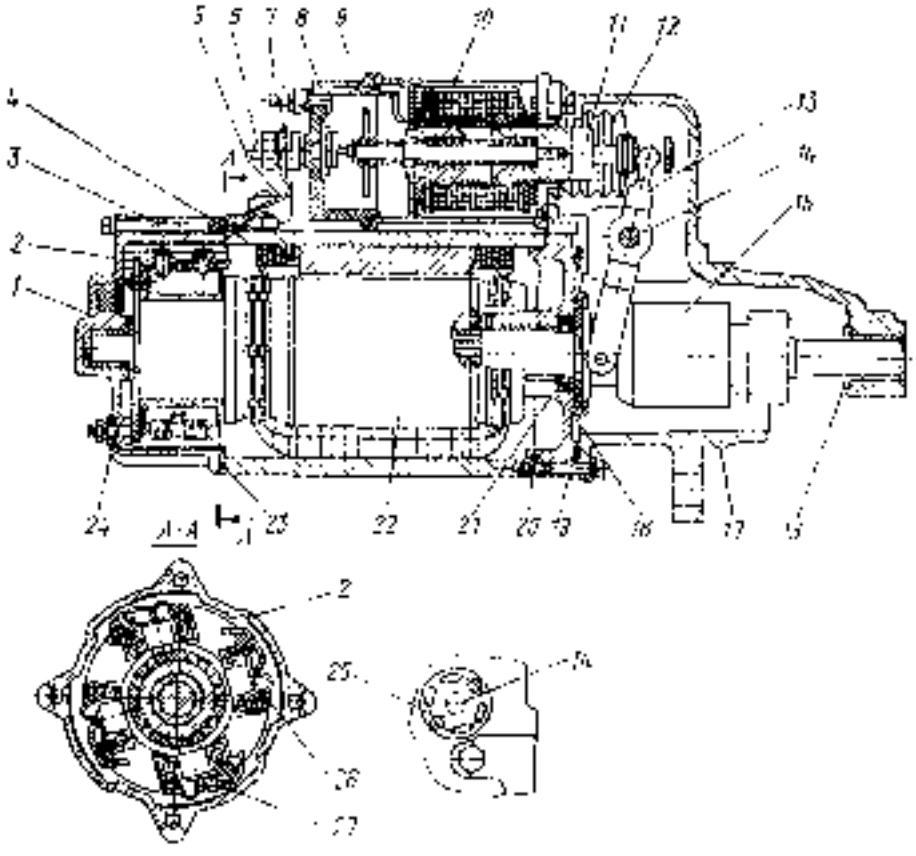

Fig. 124. Starter

1 — commutator end cover; 2 — rocker; 3 — bolt; 4 — field winding; 5 — jumper; 6 — relay outlet; 7 — relay winding output terminal; 8 — fastening relay cover; 9 — contact bolt; 10 — contact relay spring; 11 — lever pin; 12 — armature shaft; 13 — bellows; 14 — cover; 15 — lever pin; 16 — drive; 17 — thrust washer; 18 — intermediate bearing holder; 19 — intermediate bearing with shell holder; 20, 21, 22 — rubber rings; 23 — collar; 24 — armature; 25 — rubber washer; 26 — cam flange; 27 — commutator brush; 28 — metal brush

Fig. 125. Starter Drive

1 — pinion; 2 — bush; 3 — housing; 4 — sleeve; 5 — drive coupling member; 6 — taper; 7 — pin; 8 — lock; 9 — gear

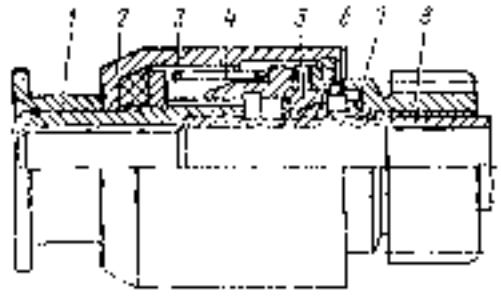

3. Bend out the lock washers, screw out four bolts *3* and remove the cover at the commutator end.

4. Turn out the screws which fasten the winding leads and brushes on the rocker, remove the brushes and rocker.

5. Turn out two screws from flange *26* and remove lever pin *14* from cover *17* at the drive end.

6. Turn out four screws and remove the relay and armature *11* from cover *17* at the drive end.

7. Bend out the lock washers, turn out five bolts and remove the cover at the drive end.

8. Withdraw the drive and lever *13* out of the cover.

9. Pull out intermediate bearing holder *18* and pick out starter armature *22* from the body.

Inspect the commutator and clean it over, if need be, using a cloth wetted with gasoline. Otherwise, clean the commutator surface using a fine glass paper (of C-100 grain effect). If carbon could not be removed, machine the commutator on a lathe. Check that surface roughness is better than $R_a = 1.25$ and the commutator minimum diameter is 53 mm.

Check that brushes move easily in the holders. If brushes having chips or worn down to height of 13 mm are seen, replace them. Inspect fasteners on the brushes and blow through the brush-commutator assembly with compressed air.

If burnt, clean the contact bolts and starter relay plate, using fine glass paper or file taking care so as not to disturb the parallelism. If heavy wear is seen on the contact bolts or plate, replace the bolts or turn over the plate.

For reassembling the starter, proceed in the reversed sequence of operations. On reassembling, check the starter relay for adjustment and tightness.

Before checking, remove copper-made jumper *5* connect a wire conductor from the storage battery positive terminal to relay winding terminal *7* and the negative terminal with the starter body; connect a pilot light between the storage battery positive terminal and starter relay output bolt, which will glow when the contacts make.

Supply voltage to starter relay output terminal *7* and measure the clearance formed between thrust washer *16* on the armature shaft and drive bush which must be 0.5—1.5 mm and check now that the light glows.

For adjusting the starter turn lever pin *14* designed as a cam that has flange *25* with six adjusting holes. When adjusting, turn out two screws which fasten the flange to the cover at the drive end, turn the flange for aligning the hole in the flange with two threaded holes in the cover. Check that the starter relay has been adjusted correctly.

When fitting a check gasket (Fig. 126) of $A = 2.5$ mm in thickness (steel 45 GOST 1050—74, HRC_m 41.5—46.5) between the drive bush and thrust washer, check that the contacts make and the light glows.

If the gasket of 6 mm thick is placed, check that the contacts are opened still and the light does not glow. If the light glows, readjust the starter. Check that the drive resets when the relay is cut off.

If the drive shifts hardly on the shaft, clean the latter from soil and coat it with lubricant. Screw

out the plugs on oil containers of covers and intermediate bearing and add engine oil.

Push the gear in the drive, fill engine oil in the drive housing, move the gear longitudinally in 5—10 attempts and drain the oil. Repeat this operation

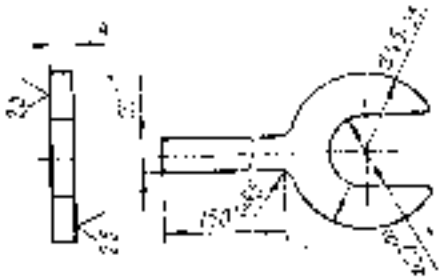

Fig. 126. Starter Check Gauge

in two or three attempts, then fill oil in the drive housing.

Inspect sealing rings, washers, bellows, replace if necessary. Inspect inserts in the covers at the commutator side. Replace the cover with inserts and the

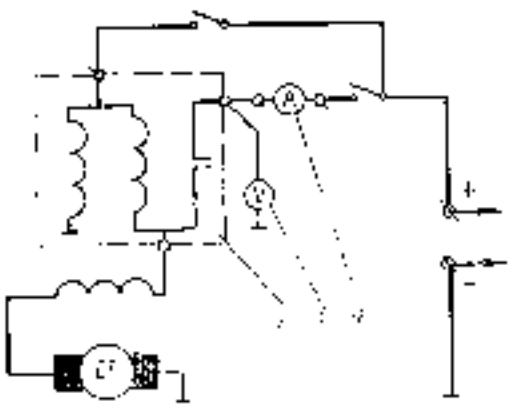

Fig. 127. Circuit for Starter Check

bearing holder if the insert worn down to dimensions:

— 19.4 mm in the cover at the drive side;
— 16.3 mm in the cover at the commutator side;
— 25.5 mm in the bearing holder.

For checking electrical data of the starter circuit shown in Fig. 127, use a voltmeter of 1.0 class of accuracy at least and ammeter of 1.5 class.

Lighting and Signalling Systems

Lighting and signalling systems comprise: two headlamps, front and rear lights, licence plate illumination light, flooding lamp, backing lamp, cab dome light, under-hood lamp, instrument illumination lamps, pilot lamps arranged on the instrument board.

The front lights are used as clearance front lamps and front turn lamps, the rear lights, as clearance rear lamps, rear turn indicators and СТОП (Stop) light.

The headlamps are energized by means of the master switch in position *II*; the distance or dim light is switched on by the foot switch.

The flooding lamp is energized by an individual switch if set in position *I* of the master switch.

If the master switch is set in position *I* and *II* the latter energizes also the clearance and instrument illumination lamps.

When mounting the body dome light, connect its circuit to the under-body lamp.

All the turn indicators are energized for flashing (alarm condition of the truck) by a special switch in whose button the pilot lamp lights. Other pilot lamps are energized from respective pickups or switches.

Sound signalling means are pneumatic and electric. To the pneumatic signal air is supplied from the air system via the air take-off valve and foot switch. Electrical pulses are received from the buzzer.

Headlamps. The light from the headlamp is directed by two screws available under the lamp rim. Screw *10* (Fig. 128) is intended for adjusting the light direction vertically (up and down), and screw *9*, horizontally (right and left).

For adjusting place the unloaded truck on a flat ground in front of an upright screen at a distance of (7.5±0.3) m apart from the headlamp diffuser and, removing rims from both lamps, switch on the light.

Adjust the beam of ФГ122-ВВ1 and 101.3711 headlamps with "European" system of light distribution in the mode of lower beam with the light section on the control screen in its lower portion, and a dark margin in its upper portion (Fig. 129).

The margin of light and dark sections should be horizontal and should coincide with line *D—D* in the left portion of the screen, directed from *P* inflection point upward at an angle of 15° to the horizontal at the right portion of the screen. The allowable lines deviation in the horizontal and vertical planes of inflection points from the traverse points of the left and right vertical lines with line *D—D* is ±35 mm.

On completion of adjustment put on outer flanges and fasten them, seeing to it that the light pattern is not shifted during adjustment.

Replace blackened bulbs before they burn. When replacing a burn-out bulb, restore the seal in the optical element. Name and specifications of lamps used in the truck are listed in Table 9.

Direction and braking signals. The turn indicators are energized from the switch mounted on the steering column. If the switch arm is turned clockwise, the right turn signal lamps glow in the front light, side turn signal flasher and rear light. If the arm is turned counter-clockwise, the left turn signal lamps glow. The switch resets automatically.

An interrupting transistor type relay is connected in the turn indicator supply circuit, that energizes the light signal means intermittently. The performance of the turn indicators is checked by respective pilot lamps arranged in the truck instrument board. If this or that pilot lamp glows continually or if this lamp fails, if the light is interrupted irregularly, which indicates that the corresponding turn indicator or the interrupting relay fails.

Check that the rear stop lamps glow after the brake pedal is depressed.

Blackout attachments. Provisions are made for attaching blackout parts on the outer light assemb-

lies. On the headlamps the blackout attachments are used in two conditions.

— blacking-out (the cover with the deflector is enclosed and the lamp light radiates through a narrow slit made in the attachment having a blue-green lens);

— non-blacking-out (the cover with the deflector is disclosed, but the lamp upper half is enclosed with the attachment).

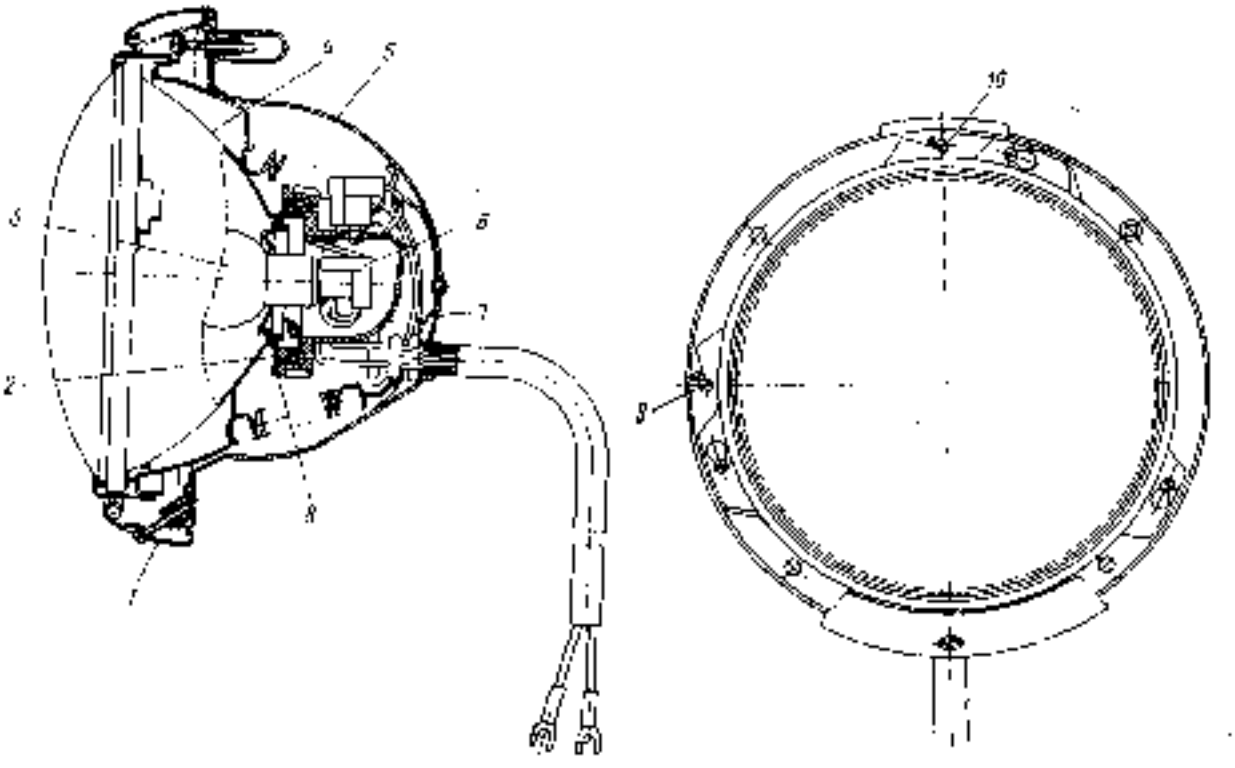

Fig. 128. 40Д.3711 Headlamp:

1 — outer flange, 2 — gasket; 3 — bulb; 4 — optical element, 5 — headlamp shell; 6 — plug connector; 7 — housing, 8 — housing holder, 9, 10 — adjusting screws

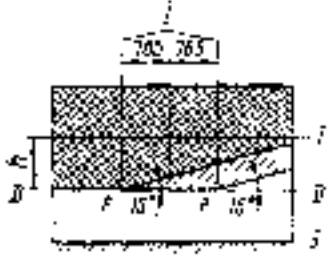

Fig. 129. Marking of Screen for Adjusting ФГ122-ВВ1 (40Д.3711) Headlamps

1 — headlamp centre line, 2 — grooves, 3 — [illegible]

Blackout attachments are available for front and rear lights, side turn signal flashers and licence plate illumination light; the cab dome light could be blacked out with a blackout insert.

Safety fuses

The preheater supply circuit is protected against short-circuits by type ПР3 bimetal fuse rated at 30 A.

The upper fuse unit (Fig. 130) protects:

1 (link) — inoperative;

2 » — flooding light circuit;

3 » — circuit of portable and under-hood lamps, power circuit of pilot lamp units;

4 » — circuit of cab dome light, truck train sign light and stop lamps;

5 » — circuit of heater motor and backing lamp;

6 » — instruments and buzzer supply circuit.

The lower fuse unit protects:

1 (link) — left-hand clearance light circuit;

Table 9

Name and Specifications of Truck Lamps

Where installed	Rating (designed voltage), W	Type to GOST 2035-76	Qty per truck
ФГ122-ВВ1 (40Д.3711) headlamp	55÷50	А24-55÷50	2
Flooding lamp	70	АКГ 24-70	1 (2*)
Front light	36	А24-21-3	2
	7	А24-5	2
Rear light	36	А24-21-3	1
		А24-5	2
Side turn signal flasher	7	А24-3	2
Cab dome light	36	А24-21-3	1
Portable light	36	А24-21-3	1
Under-hood lamp	7	А24-5	1
Signal, check and instrument illumination lamps	3	А24-2	19
Licence plate illumination light	7	А24-5	2
Alarm signal light switch	3.5	АМН24-3	1
Truck train sign illumination light	7	А24-5	3

* On Ural-4420-02 truck.

2 » — right-hand clearance light and instruments illumination circuit;
3 » — left-hand headlamp dim light circuit;
4 » — right-hand headlamp dim light circuit;
5 » — left- and headlamp distance light circuit;
6 » — right-hand headlamp distance light circuit.

For reliable operation of electronic units and systems, see that the fuses in the units are in proper

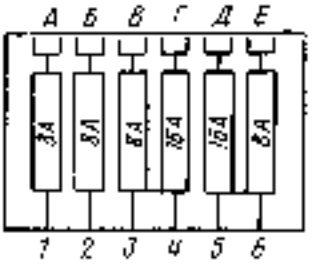

Fig. 130. Safety Fuse Assembly Circuit Diagram
1 to 6 — fuses

condition. Do not use unspecified fuses such as bent wire, bolts, washers, etc. In case of a short-circuit, this will lead to instant disabling of articles based on electronics. A burnt fuse should be replaced with another one of the same working current value.

CAB, FENDER ASSEMBLY AND BED

Cab

The truck has an enclosed-type three-seat cab having a fixed windshield and heat insulators, mounted after the engine and outfitted with a rear-view mirror at each side. The spherical mirrors must be adjusted so that the visibility zone is at best, according to Fig. 131.

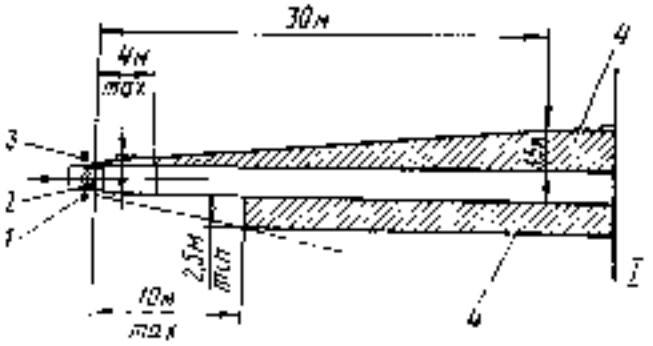

Fig. 131. Visibility Zones through Rear-View Outer Mirrors:
1, 3 — left and right rear view mirrors; 2 — driver's eyes points; 4 — visibility zone of rigid surface; I — horizon line

The cab is secured on the truck frame in four points through rubber pads. If the frame is deformed, the flexible attachment guards the cab parts against over-stresses.

Cab doors have locks and glass-frame risers. As the door is closed, pawl *12* (Fig. 132) comes in touch with door striker *11*, so the door is locked when the pawl turns.

In this position the pawl is fixed by latch *13* and latch catch *14*. Simultaneously, upper guide prong *9* of the lock enters the slot in the striker guarding the door against sagging.

The door lock could be blocked from the outside after the lock drive inner handle is turned down. When the lock is blocked, lock dog *5* stops the latch so holding it in permanent engagement with the catch. The left-hand door lock could be blocked from the outside when the lock key is turned.

For opening the door lock, turn the lock drive handle upward or depress the button on the outside handle. Now, the latch sets free the catch and the dog resets back with spring *15*. The door lock drive handle is positioned horizontally and directed forward.

The door striker is secured on the lock post with two bolts and a screw which allows to adjust it in height and depth. When adjusting vertically, check that the lock prong enters correctly the slot in the striker.

If the striker has been adjusted correctly in height, check that the door does not lift or lower in opening. When adjusting it in depth, check that the striker lower boss is held tight on the dog and that you will not apply superforce when opening the door. When adjusting in depth, check that the door aperture packing parts could not be deformed heavily and that these parts would ensure tightness and that the door does not click when the truck drives. If the door closes hardly, push out the striker or if the door clicks, pull it inside the cab. When driving the truck, check that the doors are closed tightly.

If the door packing parts flake, adhere them using grade 88НП cement after grinding and wiping through with clean wool-and-paper cloth wetted with gasoline.

The doors are outfitted with lowering and swinging glass linings. The door glass frames are lifted and lowered through a lever-type mechanism. Check that the glass frames move in the guides freely, unobstructedly.

All the friction surfaces of locks, window opener, hinges, fasteners, spring pins parts are lubricated with Литол-24 or grease at disassembling.

Windshield washer and wipers. The cab has windshield washers and air-controlled wipers.

The wipers are connected in the truck air system. Each wiper comprises an air-controlled motor having a slide type distributor and a gear used for setting the brushes on the glass frame lower edge, two brushes, ties and levers used for driving the brushes. For switching on the wiper, turn counter-clockwise the valve head available on the instrument board. By turning the valve head it is possible to adjust the wiper brushes in swinging. By turning the valve head counter-clockwise, you may increase the intensity of the brush operation. By turning the valve head clockwise till stop, you will stop the wiper.

After the wiper is cut off, the brushes set down to the glass frame lower edge automatically. If the brush setting mechanism fails, switch it on repeatedly and cut off the valve.

The hood left-hand side has a 1.5 ltr water tank used for washing the windshield glasses, from which water is supplied via a diaphragm-type pump through hoses and from two sprayers onto the windshield glass.

The pump is mounted on the floor at the left side of the cab. For feeding water depress the pedal, on each attempt water jets over the glass. Wash the

glass after the wipers are switched on. The water jet is directed by turning the sprayer nozzle. At freezing temperatures drain water out of the tank.

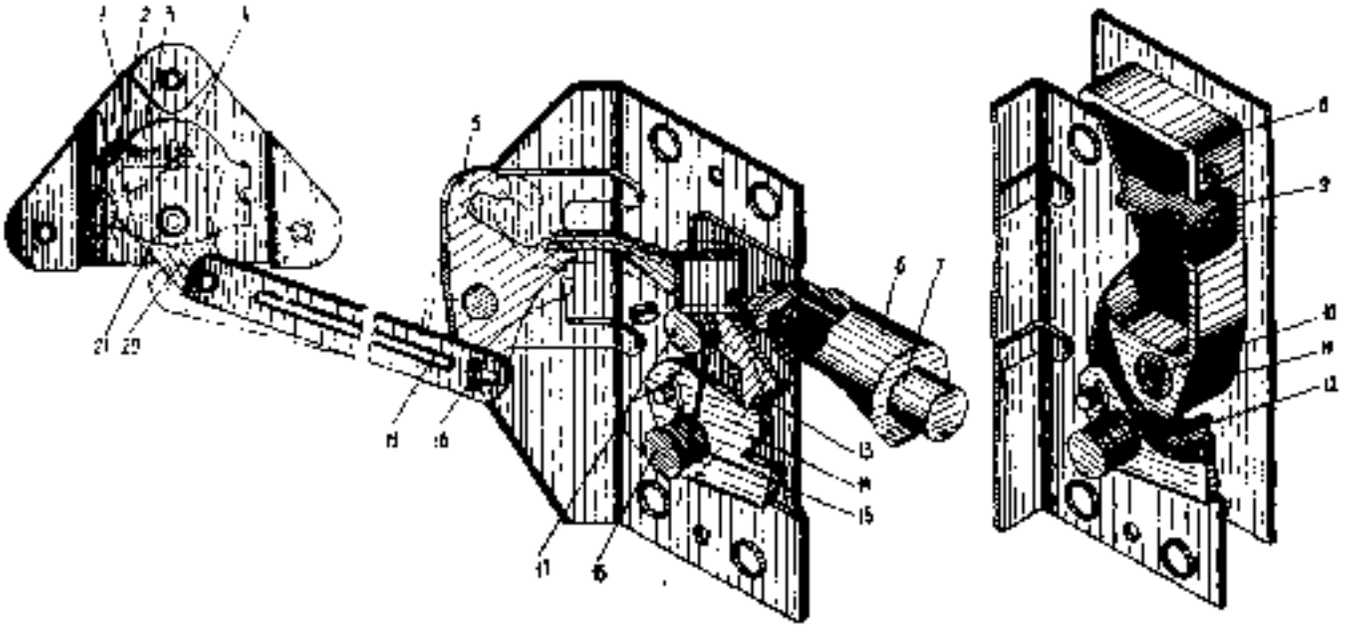

Fig. 132. Door Lock:

1 — lock control lever; 2 — springs; 3 — bracket; 4 — roller; 5 — lock dog; 6 — door outside handle; 7 — [illegible]; 8 — [illegible]; 9 — [illegible]; 10 — [illegible]; 11 — [illegible]; 12 — [illegible]; 13 — [illegible]; 14 — [illegible]; 15 — [illegible]; 16 — [illegible]; 17 — [illegible]; 18 — [illegible]; 19 — [illegible]; 20 — [illegible]; 21 — [illegible]; 22 — [illegible]; 23 — [illegible]; 24 — [illegible]; 25 — [illegible]; 26 — [illegible]; 27 — [illegible]; 28 — [illegible]; 29 — [illegible]

Heating the cab. The cab interior is heated with warm air blown out from a heater connected in the engine cooling system. From outside air could be taken into the heater radiator through exterior hatch *12* (Fig. 133) and from the cab, through interior hatch *7*. If the heater fan operates, heated air flows to warm air distributor *3* and then into the cab through controllable flaps. Lever *4* is used for controlling the warm air distributor flaps. If the lever is shifted in the upper position, air flows via deflectors *13* for blowing over the glasses, in lower position, for warming driver's and passengers feet. If the lever position is changed relative to the extreme positions, air quantity is also changed supplied for blowing over the glasses and for warming the feet.

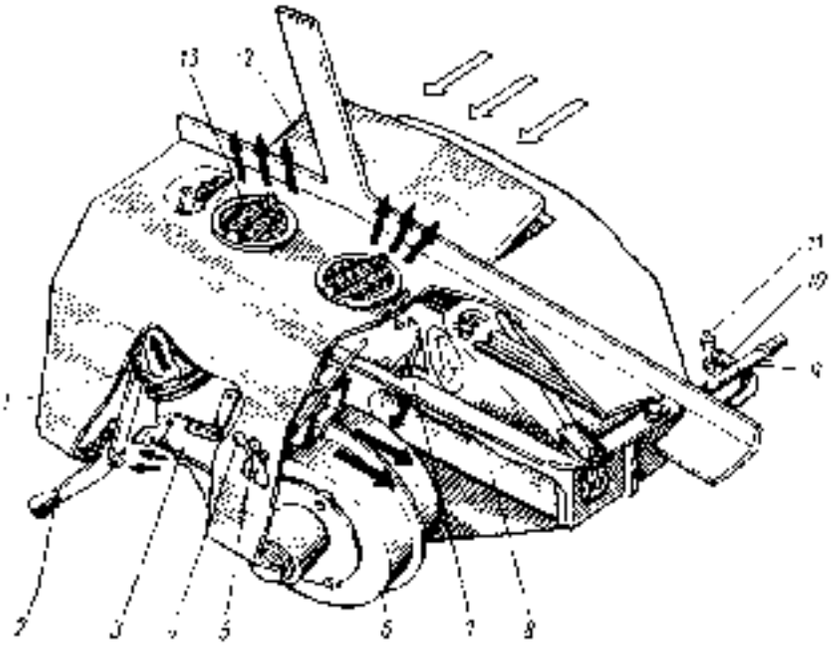

Fig. 133. Cab Heater and Windshield Blower:

1 — windshield blowing hose; 2 — exterior hatch control lever; 3 — warm air distributor; 4 — warm air distributor flap control lever; 5 — interior hatch control lever; 6 — motor for fan; 7 — interior hatch; 8 — heater radiator; 9 — heater radiator water inlet pipe; 10 — water feed pipe; 11 — [illegible]; 12 — exterior hatch; 13 — deflector

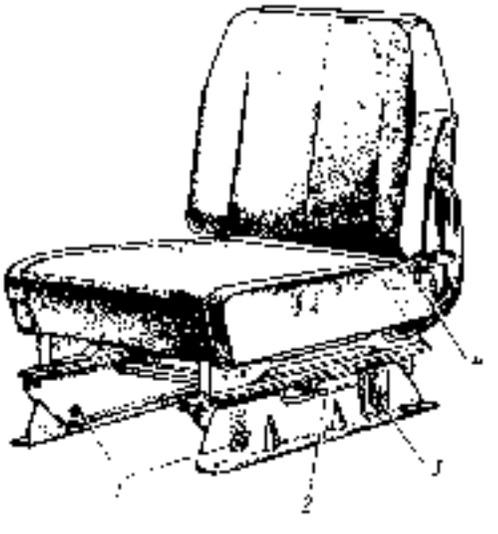

Fig. 134. Driver's Seat:

1, 3 — [illegible] height and [illegible]; 2 — [illegible] forward or locked shift lever; 4 — seat back [illegible]; 5 — [illegible] fly nut

Interior hatch *7* is controlled by lever *5*. If the lever is set in the upper position, the hatch is opened and, in the lower position, it is shut.

For most favourable positions of the heater con-

trols: simultaneous intake of air from the outside through hatch *12*, from the cab, through hatch *7*, supplying heated air over the windshield, to feet of the truck driver and passengers if lever *4* has been set in the middle position. The fan switch is available on the instrument board.

Cock *11* mounted in the engine water-feed right-hand pipe must be opened if the truck is used in cold-weather conditions. In summer disconnect the heater from the cooling system by shutting off the cock.

For starting the cold engine at an ambient air temperature of minus 10 °C and lower, if water is filled as the coolant and the engine is not preheated, prior to filling water in the cooling system, shut off the cock so as to preclude intake of cold water since it might freeze in the heater radiator. After warming the engine, open the cock.

The cab is aired through heating system hatches, apertures of turnable and lowering glass frames of the doors.

If natural air is insufficient for airing the cab, open hatch *12* and switch on the fan.

Driver's and passenger's seats are of separate design, having rubber belts and foam rubber cushions as shock-absorbing elements. The position of the driver's seat is adjusted by shifting it forward or backward. The limits of adjustment are 110 mm. Lever *2* (Fig. 134), provided at the left side of the seat base, lock the cushion in the desired position.

The driver's seat has a mechanism used for changing the tilt of the cushion and position of the seat at height with the limits of adjustment of up to 90 mm. For changing the position of the seat, turn out two front screws *1* available at the left and the right sides of the seat. Readjust the seat in height at its front, turn on these screws through some threads (do not tighten them home), slacken the fasteners on the seat rear part by turning out two screws *3* through four or five threads.

On adjusting the seat in position, tighten all the screws. The screw taper part should be fixed in one of the five tapered recesses.

The driver's seat back may be adjusted in tilting. To change the seat back incline, give two-three undoing turns to nuts *4* on the seat left and right sides, select the required incline and take up the nuts tightly.

Cowling

Some units are made detachable for convenient servicing or repair on the engine.

The assembly cowling is fastened to the truck frame through rubber pads and in the cab, through rubber buffers. The hood is of alligator type, to be opened at 90 °.

Truck Bed

The Ural-4320-02 truck bed has a hinged tailgate. The general view of the bed and the bed fasteners are shown in Fig. 135.

The bed is equipped with seats for carrying people, extension racks for the front and side boards, and top bows with braces. The middle seat can be dismounted and fixed on the front board (Fig. 136), while the side seats can be folded up, thus providing space for carrying loads.

The truck is outfitted with a canopy. Installed canopy is shown in Fig. 137. The canopy folding sequence is given in Fig. 138. Before folding, dry the canopy canvas.

Bed of Ural-43202-02 truck is a wood-made structure having a metal framework and three drop side boards. Wooden bars of 75 mm in height are placed between bed longitudinal girders and frame side members. The side boards are braced in the middle part with two chains.

On special request, the front and side boards may have extensions.

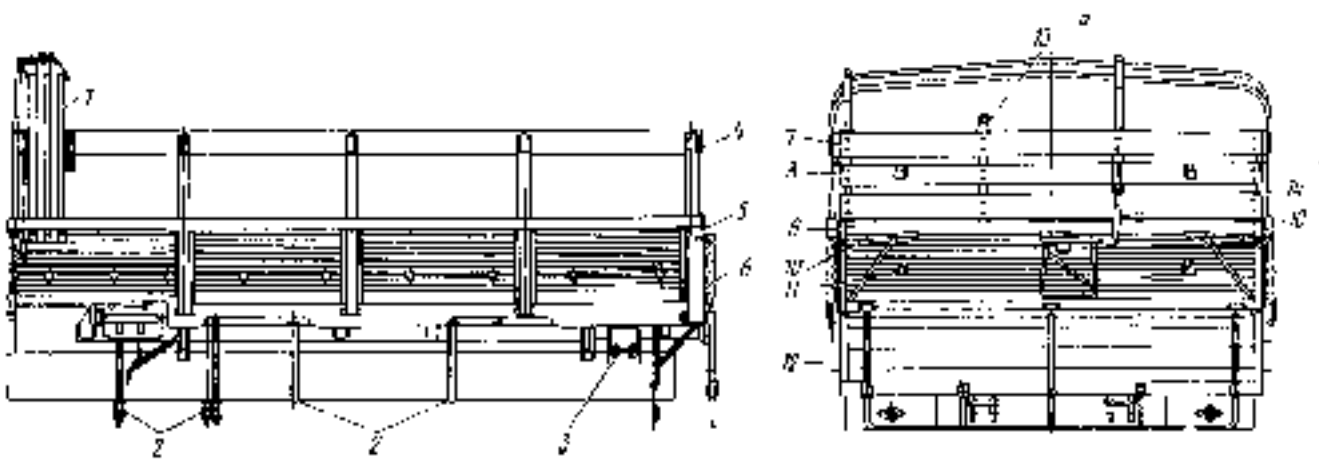

Fig. 135. Fastening of Bed on Frame

[illegible] — canopy [illegible] in [illegible] position; 2 — U-bolts; 3 — bracket of fastening bed to truck frame; 4 — side extender [illegible]; 5 — side flap; 6 — tailgate locking chain; 7 — front rational board; 8 — bracket of fastening front middle seat; 9 — front board; 10 — side seats of bed; 11 — bracket of fastening rear middle seat; 12 — tailgate; 13 — signalling push-button to driver; 14 — middle seat of bed; a — rear view

When the truck is in service, regularly check bolted joints of parts of the cab, cowling and bed so that they are tight on the truck frame. Inspect parts of the cab, cowling and bed; if cracks are found, weld them and paint.

If it is necessary to perform welding jobs remove old paint from the parts surfaces.

Before repainting of the damaged places (mecha-

ical injuries, cracks, chipping, rust, welding fly ash, splashes) it is necessary to work the old paint coating with fine or water-proof emery cloth. Wipe the worked surface with cleaning cloth moistened in gasoline or solvent, dry and paint with the enamel

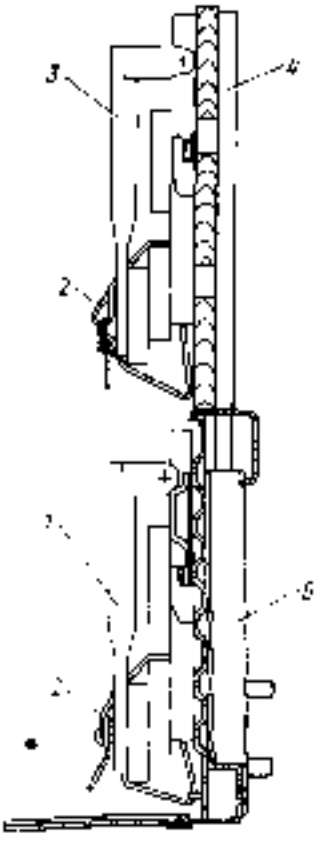

Fig. 136. Middle Seat Folding:
1 — rear middle seat; 2 — fastening belt; 3 — front middle seat; 4 — bed front grid; 5 — bed front board

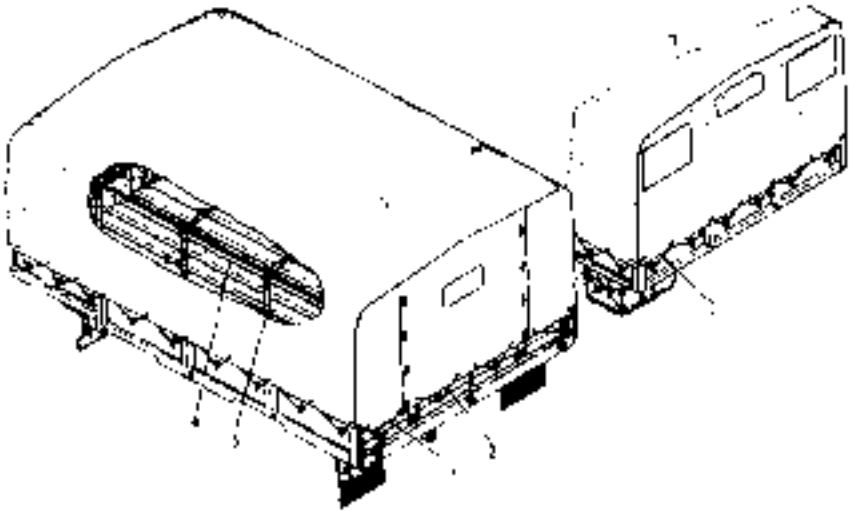

Fig. 137. Truck Bed with Canopy:
1 — canopy fastening rope; 2 — tent fastening rope; 3 — canopy bow; 4 — bow clearance tube; a — front view

of the same colour in two layers with an interval of 5—10 min using a sprayer or a soft brush.

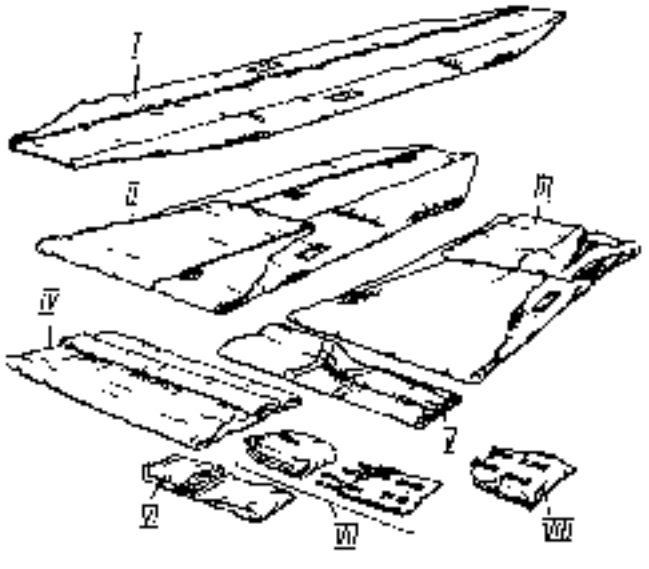

Fig. 138. Canopy Folding Sequence.
I to VIII — folding steps

Regularly pick away and dry the carpet from the cab floor; otherwise the carpet, if moistened, looses its heat-insulating properties and promotes rusting.

BOLSTER

The towing truck has a bolster arrangement with dia. 30.8 mm locking hole across the grips to GOST 12017—81. The bolster is used for articulating the truck with a mating semitrailer that has a standard hitching pivot. Bolster *10* (Fig. 139), on which the semitrailer rests, rocks in longitudinal and lateral planes. The former — on pins *15*, the latter — at the expense of elasticity of rubber hinges *11*.

The bolster is hitched with the semitrailer pivot by means of two grips *2* of the hitch mechanism. The grips are mounted on pins *14* which seize the pivot in turning thereon. In closed condition the grips are held by locking cam *3* backed with spring *5* fitted on the cam rod. When the two vehicles are hitched, self-release safety lock *4* sets in vertical position.

For unhitching turn away the self-release safety lock and, using lever *1*, shift locking cam *3* in the extreme front position. Latch *6*, backed with spring *7* locks the cam in the front position. When the truck drives away, the semitrailer pivot pulls apart the hitch mechanism grips and disengages them. In this case the left-hand grip pin turns the latch and the locking cam could shift backward till it thrusts against grip end faces, the grips being held in opened condition. Thus, the bolster becomes ready for hitching automatically with the semitrailer.

In hitching the semitrailer pivot shifts and turns the grips forcing them to close. The locking cam slides on the end faces and enters the slot of the grips, so closing the latter automatically.

On the truck frame the bolster hitch arrangement is secured via brackets *13*, underframe and bars.

Run-on slides are provided behind the bolster, used for facilitating the hitching of the truck with the semitrailer.

Hitching and unhitching. Before hitching make sure that the bolster proper and its fasteners are in good condition; check that the bolster and slide guides are not soiled and that there are no foreign particles thereon; if need be, clean the bolster top from soiled grease and coat it with fresh lubricant in a thin layer. Apply the parking brake and set the semitrailer on the bolster so that the semitrailer rest plane is in the same level with the bolster or somewhat lower it.

For hitching or unhitching select an even flat ground having hard surface. Set the truck and semitrailer longitudinal axes aligned in the same straight line.

For hitching proceed as follows:

1. Pull away the self-release safety lock and set the hitch control lever in the extreme front position.
2. Back the truck slowly to the semitrailer so that the semitrailer pivot enters between slide guides and in the bolster grips till it goes. Check that the hitch operation is carried out automatically.
3. Apply the truck parking brake.
4. Check that the grip lock lever is in the extreme rear position and that the self-release safety lock comes down locking the cam rod.
5. Lift the semitrailer support in the extreme top position and fasten it reliably.
6. Plug the semitrailer connecting cable in the socket connector.
7. Connect the truck brake air hose to the semitrailer connecting head.
8. Open the brake air valves on the truck and semitrailer setting their levers in parallel with the valve longitudinal axes.
9. Release the semitrailer parking brake.
10. Move forward the road train for some distance and check that the vehicles have been hitched correctly and that the brakes and instruments of the semitrailer operate efficiently.

For unhitching proceed as follows:

1. Apply the semitrailer parking brake.
2. Lower the semitrailer support until it rests on the road unloading somewhat the truck springs. When unhitching on loose ground, place pads under the semitrailer support.
3. Close the truck air shut-off valve and the semitrailer brake control valve setting their levers in square with the valve longitudinal axes. Disconnect the brake air drive connecting heads and close the protecting covers on the heads. Fasten the connecting head together with the hose on the truck platform.

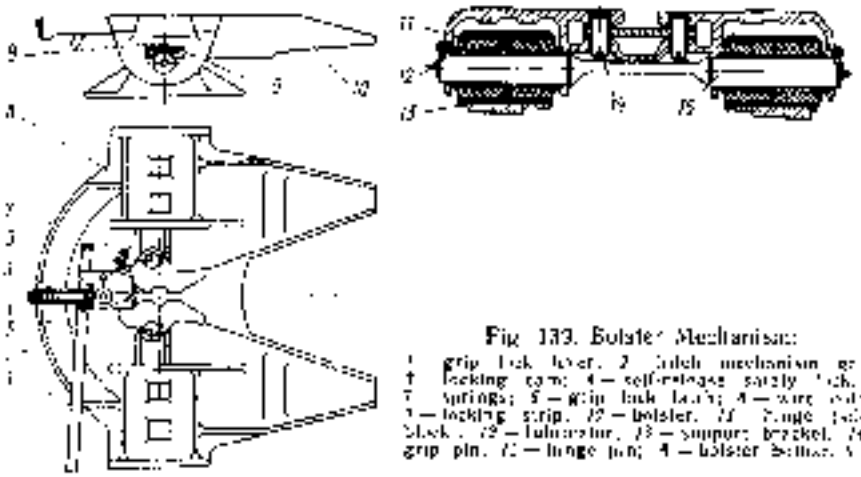

Fig. 133. Bolster Mechanism:
1 — grip lock lever; 2 — hitch mechanism group; 3 — locking cam; 4 — self-release safety lock; 5 — springs; 6 — grip lock lever; 8 — wire holder; 9 — locking strip; 12 — bolster; 14 — hinge (silent block); 15 — lubricator; 18 — support bracket; 24 — grip pin; 42 — hinge pin; 4 — bolster bottom view

4. Unplug the connecting cable from the socket connector and fasten the cable on the truck platform.
5. Pull away the bolster self-release safety lock and reset the grip lock lever in the extreme front position.
6. Engage the first gear in the gearbox and steer the truck slowly forward until it is unhitched fully from the semitrailer.

SPECIAL EQUIPMENT

Layout of auxiliary units and power take-off conditions should be submitted to manufacturer's approval. Propeller shafts to be laid out by the user for driving auxiliary units must have disbalance of not more than 0.004 N·m (40 gf·cm) and stress of shifting in splined joints of not more than 150 N (15 kgf).

Auxiliary Power Take-Off

Power is taken off the primary shaft of the distributor box via moving coupling *3* (Fig. 140), utilized for driving the winch.

If the truck is not outfitted with a winch, the PTO may be used to drive various plants under stationary conditions or when the truck is running.

Propeller shafts installed by the user for driving of plants must not have a disbalance in excess of 40 gf·cm and the effort of movement in splined joints in excess of 150 N (15 kgf).

Rotational speed of the PTO shaft should not exceed 1600 min^{-1} with any gear engaged in the gearbox. The mechanism ensures a power take-off up to 40 % of the engine maximum power.

The PTO can operate even at neutral setting of the distributor box gear-shift coupling, when the primary shaft gears are at rest and do not splash the oil. For lubrication of the gear and shaft bearings, a plunger pump is installed in the casing. The pump includes piston *12* with delivery valve *13*, safety valve *16*, and housing *14*. The piston with the

connecting rod is mounted on the eccentric of shaft *1*; the piston performs translational motion as the shaft rotates. To prevent an undue rise of pressure with

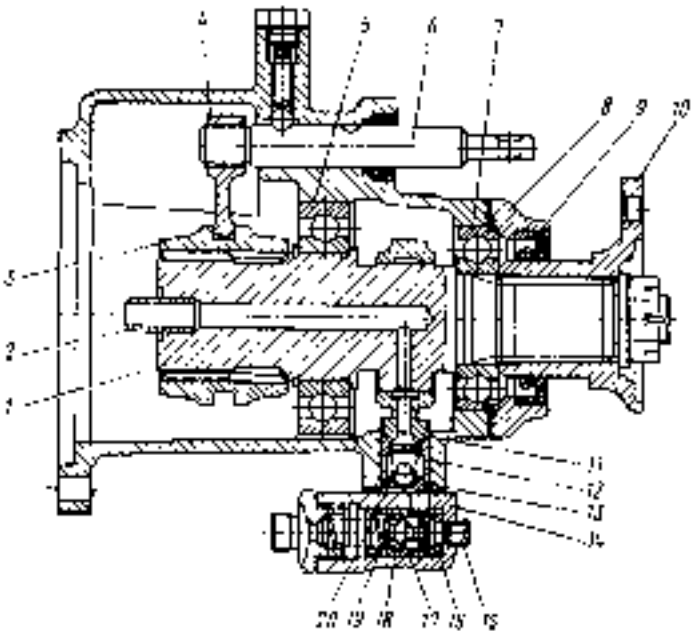

Fig. 140. Auxiliary Power Take-off

1 — shaft; *2* — housing; *3* — coupling; *4* — lock; *5*, *7* — roller bearings; *6* — lock rod; *8* — bearing cap; *9* — collar; *10* — flange; *11* — pump connecting rod; *12* — pump piston; *13*, *14* — pump valves; *15* — plug bolt; *16* — stopper; *17* — safety valve; *18*, *19* — valve seat; *20* — safety valve spring

increasing rotational speed, the suction valve is of differential type and has a cylindrical spring. Oil is taken from the distributor box oil bath through a pipe and then the pump forces oil to the gear bearings through the ducts made in shaft *1* and in the primary shaft of the distributor box. Some oil penetrates through the gaps and lubricates the shaft bearings.

The PTO is engaged using the lever installed in the truck cab.

To prevent spontaneous engagement of the PTO, a lock is provided on the cab floor. When assembling the auxiliary PTO and the control drive, do the following adjustment works: rotate rod *6* to set coupling *3* so that its end face bears up against the shoulder of shaft *1* and the lock ball is in the recess of rod *6*.

The control drive is adjusted by varying the rod length. In this case, the lock plate, when extended to the extreme r.h. position to the truck front, should fix reliably the PTO lever in the «off» position. The lever should bear up against the bevel part of the lock.

When the auxiliary PTO operates continuously, see to it that the bearings of the distributor box primary shaft and the PTO shaft do not overheat. Overheating is indicative of a fault in the oil pump.

Serviceability of the PTO box pump should be checked by two workers as follows:

— apply the parking brake to the truck;

— set the distributor box shift lever to the neutral position;

— disengage the winch by lowering the lever on the frame r.h. side member;

— screw out stopper *16* in the pump body;

— start the engine, engage the auxiliary PTO and one of the gears in the gearbox;

— check serviceability of the pump, for which purpose stop the plug hole with your finger. If the pump is in good repair, oil pulsates in the hole.

Do not operate the PTO if the pump is faulty.

Winch

The winch (Fig. 141) is designed for self-recovering and also for recovering of trucks and trailers on heavy road. It comprises a worm-type reduction gear unit, a drum with wound on wire rope and a rope winding guide.

The gear unit mechanism comprises a globoid pair with 31:1 ratio. Worm wheel *20* is riveted on a hub that is able to mesh with drum shaft *10* via moving coupling *22*.

The reduction gear worm mounts automatically-operated band brake *1* (Fig. 142) that guards the drum against occasional rotation and unwinding of the rope when the truck clutch is disengaged or if the safety pin has been sheared off.

The brake should be adjusted when the drive runs for backward motion and the drum moving coupling is disengaged. If the brake overheats to a temperature your hand could not bear (~60 °C) during 1 to 3 min, tighten the band fastening nut *3* and locknut *4* through two or three turns.

Adjusting the winch reduction gear unit. Adjust the gear bearings if axial clearances are formed and when a new worm pair is fitted.

Adjust the bearings if you fail to eliminate axial clearances by retightening the bearing cap bolts. The bearings must be readjusted with preload.

Check that the torque required for cranking the gear worm in bearings *29* (see Fig. 141), *31* and *32* is about 1—2.5 N·m (0.1—0.25 kgf·m). If the shaft turns rather easily or it has an axial clearance, remove some shims *28* and *33* of the same thickness from under the bearing front and rear caps.

If the shaft is cranked at more than 2.5 N·m (0.25 kgf·m), add shims of the same thickness under the caps. For checking the worm shaft torque, see that the cap fastening bolts have been tightened to the stop.

Quantity of the shims placed under the rear and front caps should be approximately the same, and that facilitates subsequent adjustment operations of the worm pair for meshing. When readjusting the worm wheel shaft taper bearings, vary the number of shims *16* and *24* to be placed under bearing caps.

When checking the worm wheel shaft bearings for preload allowance, see that the shaft has been meshed with the worm. The torque required for cranking the worm wheel shaft in the bearings is about 3—6 N·m (0.3—0.6 kgf·m).

On readjusting the bearings, check that the worm pair is meshed correctly, using paint on the teeth contact pattern. If the pair has been adjusted correctly, see that the teeth working face print, when the wheel is unloaded, is in the tooth middle and makes at least 5 mm in width and ⅔ in height of the tooth.

To change the contact pattern in height of the tooth, shift worm *30* axially, using shims.

To displace the contact pattern towards the tooth

root, remove a number of shims 28 from under cap 27 at the flange side, to displace it towards the tooth end, add shims. Correspondingly, change the number of shims 33 under cap 37 at the brake side, so that the total thickness of shims at both sides remains the same. The contact pattern is displaced in the shaft, which would be sheared off if the winch is overloaded.

All propeller shaft joints are of identical design and unified with those of GAZ 53A truck.

The intermediate propeller shaft runs in two bearings.

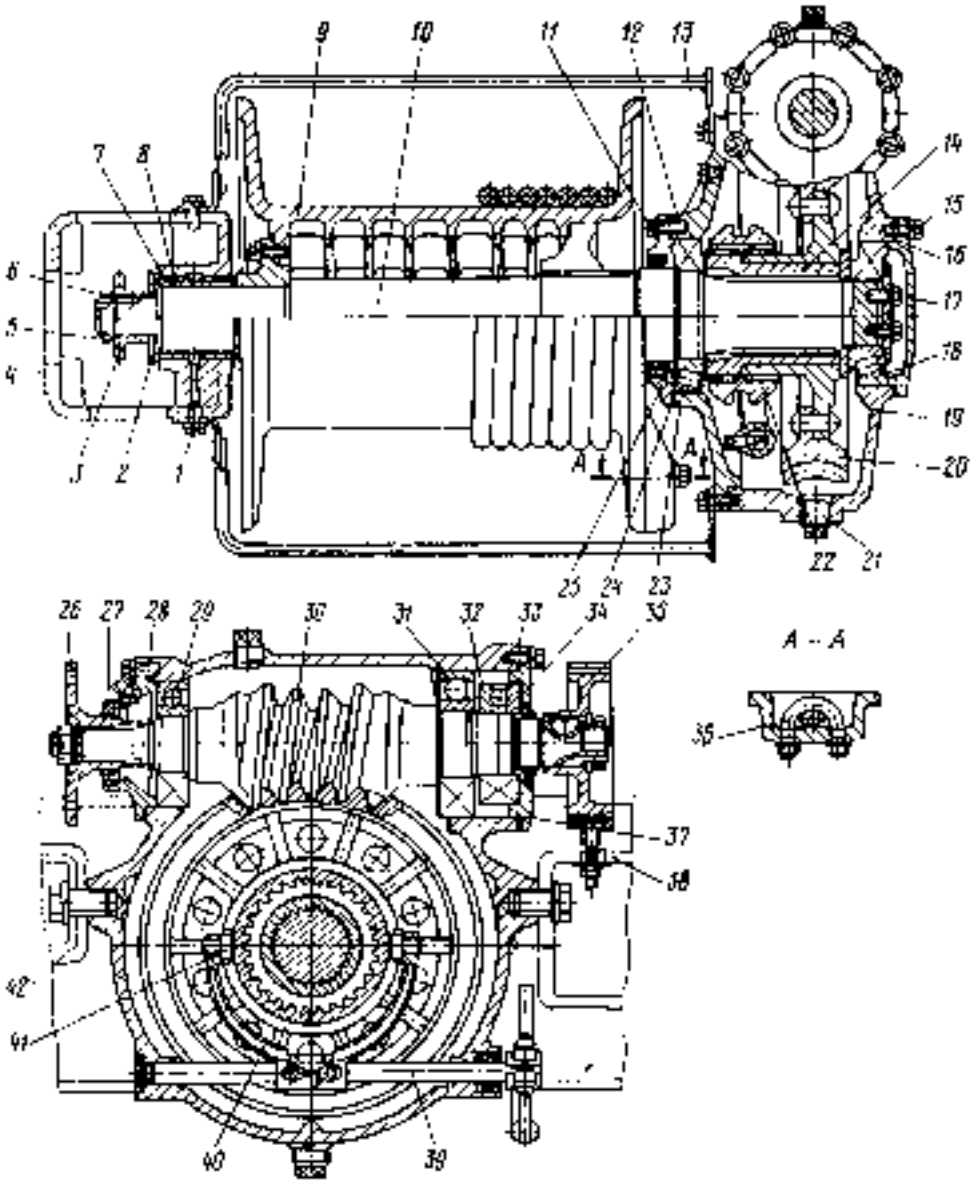

Fig. 111. Winch Reduction Gear Unit

1 — [illegible]; 2 — thrust washer; 3 — washer; 4 — worm shaft bracket; 5 — lock washer; 6 — nut; 7 — sliding bearing; 8 — distance bush; 9 — cover; 10 — worm shaft; 11, 41 — bolts; 12 — reduction gear cover; 13 — rope winding; 14 — fixed coupling; 15, 16, 17, 18 — shims; 19, 25, 27, 37 — bearing caps; 20, 21, 30, 31, 32 — bearings; 22 — reduction gear case; 23 — worm wheel; 24 — pipe; 26 — moving coupling; 28 — flange; 29 — reduction gear worm; 33 — gasket; 34 — hand brake; 36 — rear fastening clamp; 38 — lever screw; right-hand bracket; 39 — coupling bolt; 40 — fork; 42 — slide block; 43 — winch suspension cross member

tooth width by the axial displacement of the worm gear in the same direction.

The globoid worm pair operates correctly only if the meshing has been adjusted properly.

Maladjustment may cause overheating of the pair and fast wear of worm wheel teeth.

Winch drive. Power from the distributor box is taken off via the auxiliary power take-off to the winch reduction gear by means of three propeller shafts.

For protecting the winch parts against overload, safety pin 2 (Fig. 113) is fitted in the front propeller

For correcting errors in mounting, sliding forks 7 of the front and rear shafts enter the splines provided in the ends of the intermediate propeller shaft. Oil in the splined joints is stowed due to packing rings 8.

For smoothing rotation of the winch reduction gear worm, the drive propeller shafts are mounted so that the axes of holes for the bearings in sliding forks of front 4 (see Fig. 74) and rear 6 shafts are aligned.

Rope winding guide. The winch is outfitted with a rope winding guide (Fig. 144), used for winding

the wire rope on the drum even if the drum deflects relative to the truck axis at 15° maximum. On the drum the rope is held by a clamp and is paid out backwards only.

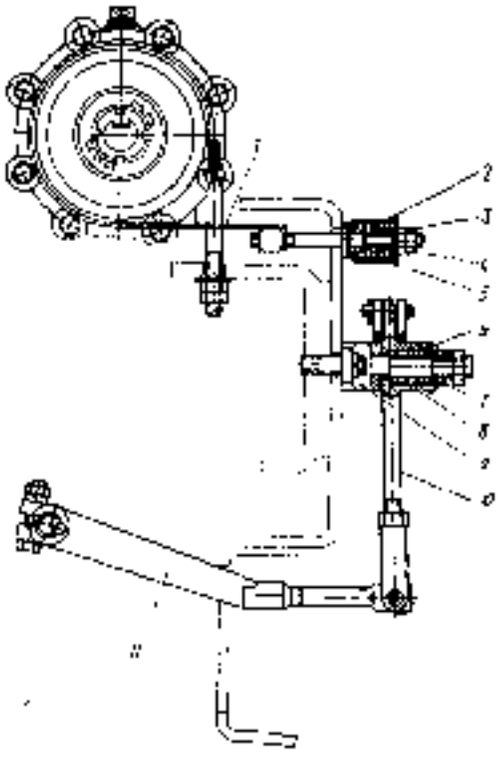

Fig. 142. Winch Control.

1 — band brake, 2, 3 — springs, 4 — nut, 5 — lock nut, 6 — press over coupling, 7 — winch control lever, 8 — bush, 9 — bracket, 10 — tie rod, 11 — winch engagement lever

Case 22 of the guide roller holder lays over the rope reciprocating along lead screw 6 and on two guide rolls 7. The l. h. and r. h. threaded screw, fitted in two bearings, is driven via a chain transmission from the drum shaft through driving 16 and driven 19 sprockets. For tensioning the chain, use shims 2 and 14; the chain may sag as about 3—10 mm.

From lead screw 6 axial force is transferred to the guide roller holder case via lead screw slide block 20. The latter is placed inside the guide roller holder case and locked with cover 21. Guide rollers 19 are fitted on polyamide bushes 18 turning on pins 17 locked by strip 5.

Rules for using the winch. Prior to operating the winch, check that the drive for engaging and disengaging the winch drum operates correctly; also check that the rope is wound correctly and is fastened reliably. If the drive is adjusted properly, check that the length of tie rod 10 (see Fig. 142) between holes in the adjusting forks is about 228—232 mm.

At difficult engagement on the winch drum in cold season, warm up the winch reduction gear in idle running during 3—5 min.

Do not use the winch rope for towing a truck or a trailer or if the rope angle of deflection relative to the truck center line exceeds 15°.

For putting the winch in operation:

— set the distributor box and gearbox levers in the neutral position;

— using a 30 mm wrench, set the moving coupling lever in the upper (on) position for forcing out the rope. For paying out the rope by hand, set the moving coupling lever in the lower (off) position;

— release the lock and shift the auxiliary power take-off lever forward to the stop;

— engage the first or second gear and pay out the rope of the desired length; take in sags by hand. Before pulling check that at least three or four coils are left on the drum;

— for pulling a cargo, engage the reverse gear;

— for self-recovering of the truck, engage a lower speed gear in the distributor box and the reverse gear in the gearbox.

Speed up the engine crankshaft slowly. If the engine is accelerated abruptly, it has no effect on increasing the pulling force applied to the rope but may cause a shear-off of the safety pin. If the safety pin is sheared off, immediately disengage the drive and shift the gear shift lever in the neutral position; otherwise, the shaft may be seized in the flange. Fit a new safety pin.

Do not use bolts or other parts at the substitute of the pin.

In service it is difficult to determine the force applied to the rope; therefore, before using the winch, estimate probabilities of use of the pulley under local conditions. Use of the winch with the pulley is shown in Fig. 145. When the pulley is not supplied with a hook, use the towing rope supplied with the truck.

When the pulley has to be applied for increasing the pulling effort for self-recovering (position I), it must be fastened to a fixed object selected as a support and the winch rope hook, to the truck towing hook. When the pulley is used for changing the rope direction for recovering of another truck (position II), fasten it to a fixed object selected as the support and the winch rope hook, to the towing hook of the truck to be pulled out. When the pulley is

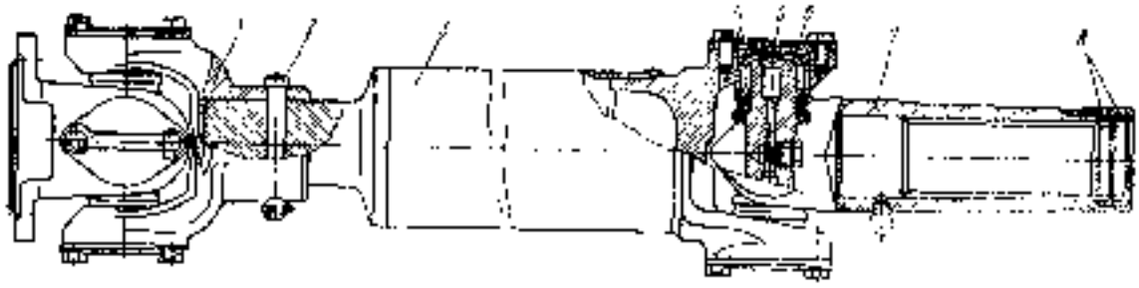

Fig. 143. Winch Drive Front Propeller Shaft.

1 — universal joint fork, 2 — safety pin, 3 — propeller shaft, 4 — needle bearing cup, 5 — locking strip, 6 — cover cross, 7 — sliding fork, 8 — packing rings

used for increasing the pulling effort for recovering of another truck (position *III*), fasten the pulley to the towing hook or rope on the recovery truck towing hook and the winch rope hook, to a fixed object by means of the second towing rope.

Centralized System of Tyre Air Pressure Control

The tyre air pressure control system (Fig. 146) makes possible to control and maintain

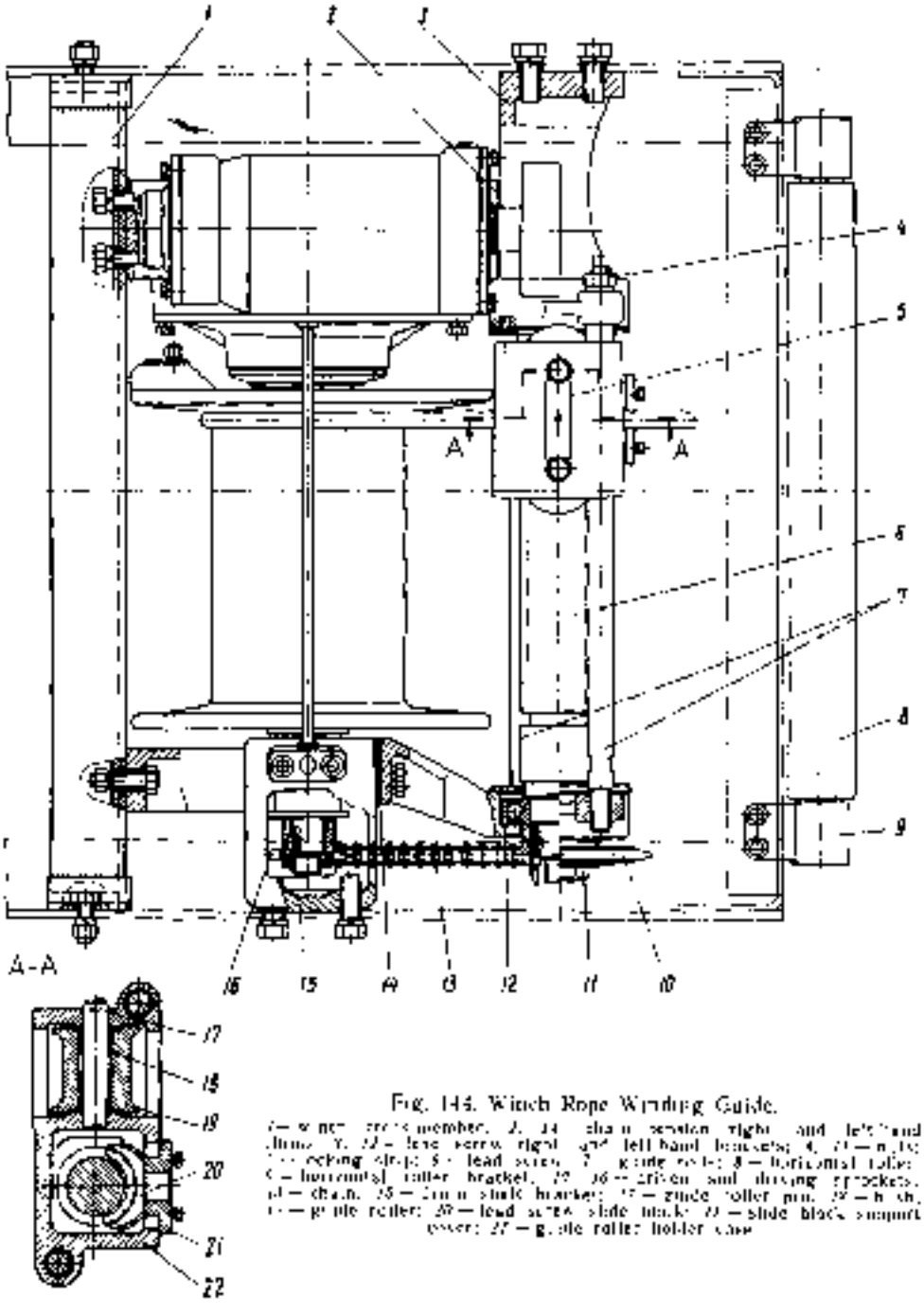

Fig. 144. Winch Rope Winding Guide.

1 — winch cross member; 2, 3 — chain tension right and left hand chains; 4, 5 — right and left hand brackets; 6, 7 — guide rollers; 8 — horizontal roller bracket; 9, 10 — driven and driving sprockets; 11 — chain; 12 — chain shaft bracket; 13 — guide roller pin; 14 — hook; 15 — guide roller; 16 — lead screw; 17 — slide block; 18 — slide block support cover; 19 — guide roller holder case

It is admissible to fasten the winch rope directly to the fixed object, at that the hook is fastened to a preliminarily tightened rope.

For precluding overheating of the winch reduction gear do not allow more than three attempts in sequence for pulling the cargo with the use of the rope full length at the maximum or proximate load.

Lay out the winch hook in the thansport position as shown in Fig. 145, *IV*.

pressure within the required limits and to increase cross-country capacity of the truck by reducing the tyre pressure. It allows to drive with a punctured wheel tube without changing of the wheel (**wheel valves of intact wheels should be closed**), if supplied air is sufficient for maintaining the required pressure in the tyres. Air is supplied to tyres via a single-line circuit. When the wheel valves are open, all truck tyres are interconnected and have the same pressure.

In this case, air pressure is controlled simultaneously in all the tyres.

Pressure control valve of spool type consists of case *7* (Fig. 147) in which collars *10* and slide valve *12* are set. As the latter shifts along the pin, the circular groove turned thereon communicates the valve chamber with atmosphere or with the delivery pipe. The limit valve used for shutting off the tyre inflation system if the pressure in the truck air system drops lower than 600 kPa (6 kgf/cm²), is adjusted by bolt *14*.

Unit of air-feed collars *22* (see Fig. 148) comprises four collars fitted in the axle journal (housing). The collars seal joints of duels in the fixed journal (housing) and those in the turning semiaxle.

Using and servicing the system. Before leaving for a trip open the wheel valves completely and for a standstill close them to avoid air escape through untight joints in the pipelines. If an ambient temperature drops below minus 35°C, open the wheel valves 15 km after starting to drive.

Blow through the air pressure control system with the air from the tyres after the wheel valves are opened. For the purpose, set the valve control lever in the ВЫПУСК (Exhaust) position and drop the pressure in the tyres by 0.03—0.05 MPa (0.3—0.5 kgf/cm²). After that adjust the pressure in the tyres to the pressure which corresponds to the road roaring. Blow the system through also before the truck standstill and after each leaving a garage.

For testing air pressure in the tyres, see the pressure gauge indications after the pressure control valve is set in the neutral position and the wheel valves are opened. Not to damage the tyre pressure gauge by rising sharply air pressure, shift smoothly the control valve lever in the НАКАЧКА (Inflating) position when the pressure in the tyres is not high and when the wheel valves are sure to be opened. If a pressure drop is evident, determine by closing and opening the wheel valves in turn, in which tyre air escapes. If it is necessary to reduce the air pressure in tyres, adjust it in compliance with Table 10 (section «Driving Technique») depending on the trip conditions.

Maintenance of the system consists in checking the tightness of joints of pipes and hoses. Air heavy escape points should be determined by ear and minor air leaks, by applying soaped emulsion. If air escapes through untight joints, repair by tightening or replacing faulty parts of the joint.

If the pressure control valve, wheel valves and pipe connections are found intact, check that air escapes through air-feed collars. If need be, replace broken collars.

The air-feed collar unit shall perform efficiently, mainly if collar friction surfaces are lubricated properly. When refitting some of the collars, lubricate their surfaces and pack the lubricant in chambers between the first and second and also between the third and fourth collars. When mounting a semi-axle, also lubricate thoroughly the working journal surface, taking care that the airfeed hole is not clogged with lubricant.

When fitting collars, use a special mandrel (position *III* in Fig. 148) so as not to damage them in pressing-in. Use a special remover available in the set of tools when pulling out the collars (positions *I* and *II*).

Install the hubs with the caps according to the pointers given in section «Driving Axles. Adjustment of Wheel Hub Bearings».

If the pressure control system is broken, inflate the tyres through the hose available in the set of tools, connecting it to the air take-off cock and in turn to the wheel valves.

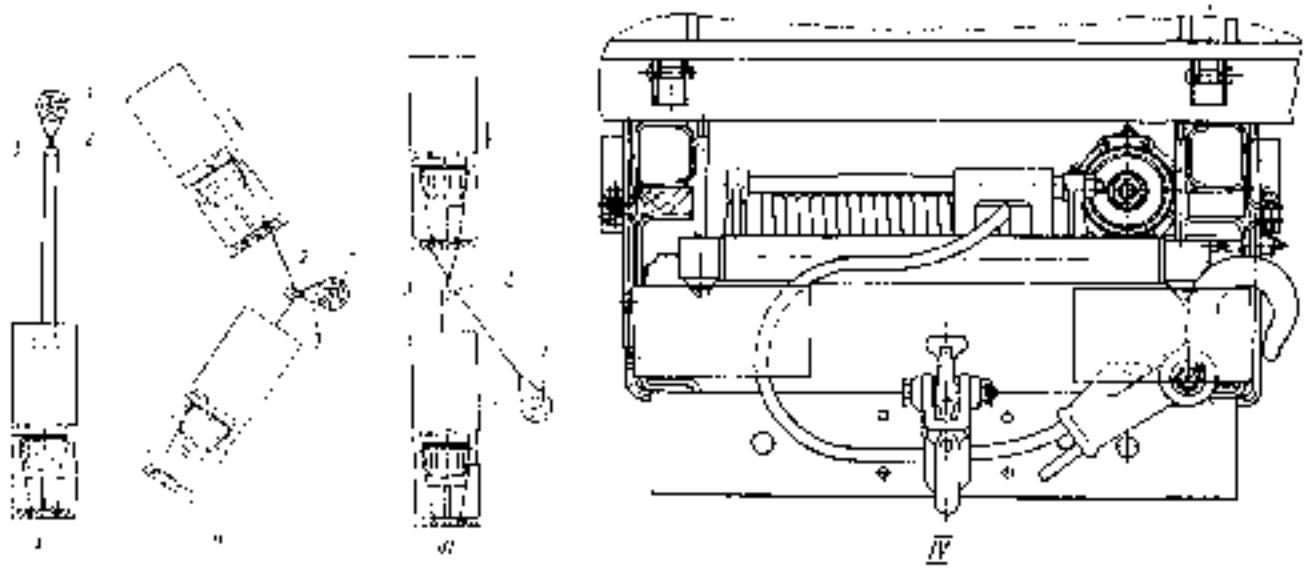

Fig. 145. Winch Pulley Appliance

1 — fixed object; 2 — pulley; 3 — leaving rope; 4 — pulling effort increase for self-recovering; 5 — pulling effort change in recovering of trucks; *III* — pulling efforts increase in recovering of trucks; *IV* — folding of rope in transport position

Sealing System

The sealing system (Fig. 149) is used for sealing parts and units of the truck which may be flooded with water when the vehicle crosses fords and for maintaining constant pressure in the inner spaces of units, and in fuel tanks.

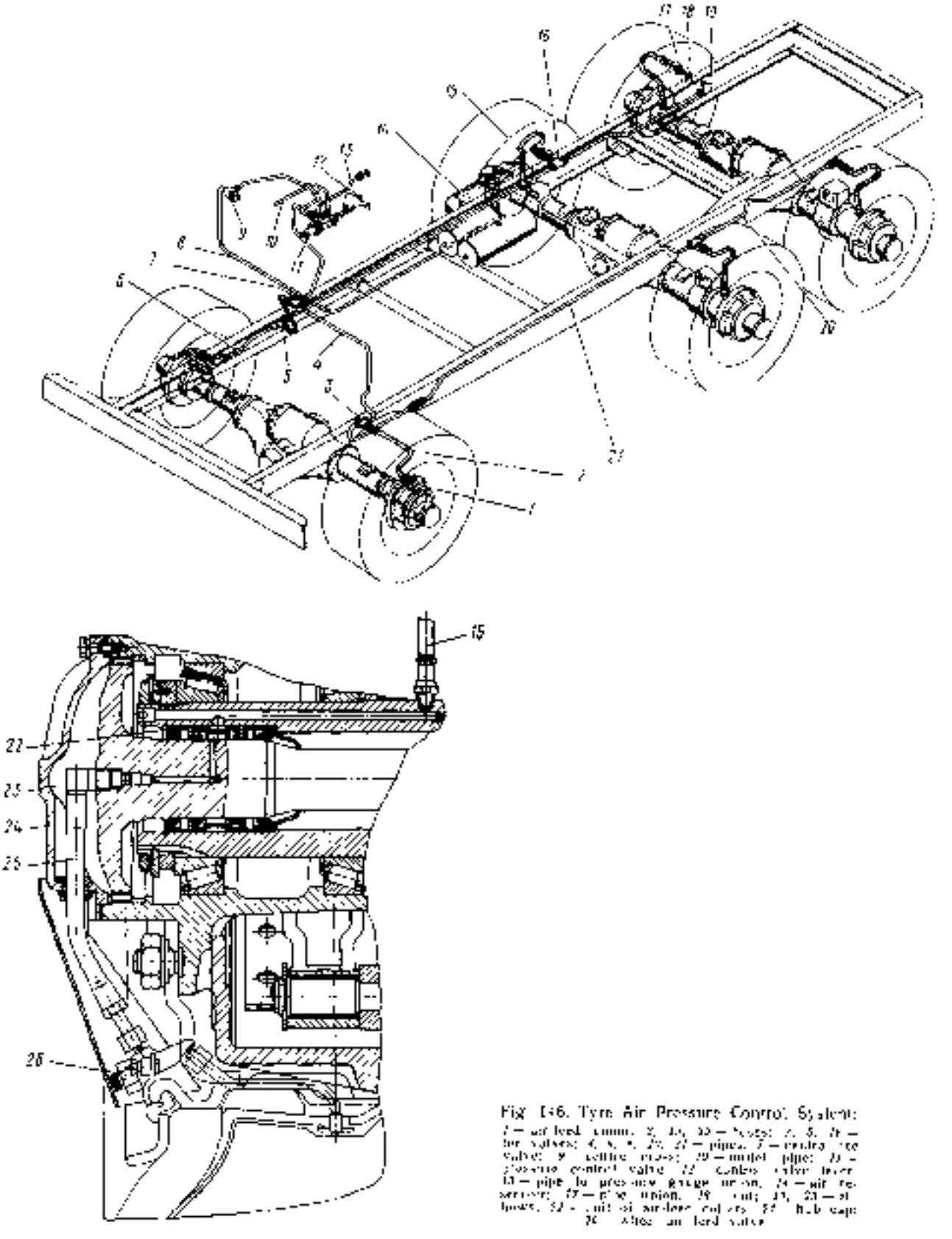

Fig. 146. Tyre Air Pressure Control System:

1 — air feed union; 2, 10, 33 — hoses; 3, 5, 7 — tee valves; 4, 8, 9, 20, 21 — pipes; 6 — rear tee valve; 11 — centre tee; 19 — inlet pipe; 12 — pressure control valve; 13 — cabin valve lever; 14 — pipe to pressure gauge union; 24 — air reservoir; 17 — pipe union; 18 — unit; 22, 23 — stubs; 32 — unit of air-lock valves; 35 — hub cap; 36 — Allen air feed valve.

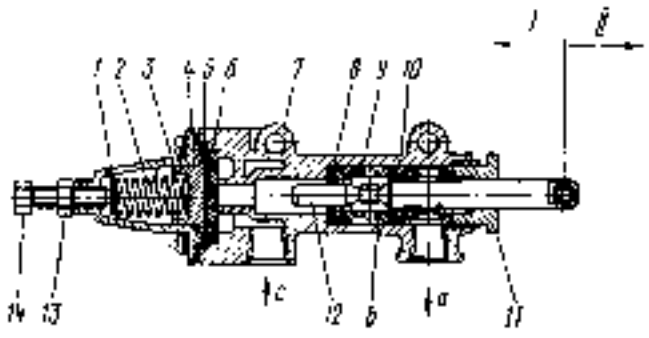

Fig. 147. Pressure Control Valve:

[illegible]

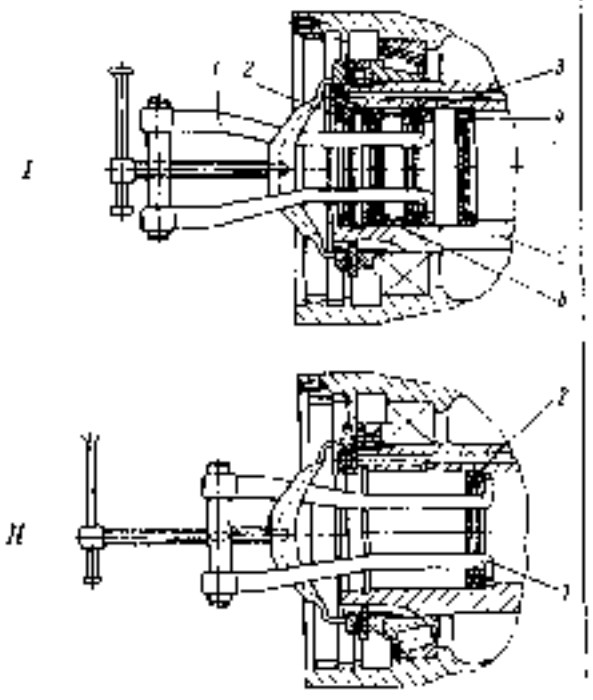

Fig. 148. Dismounting (I, II) and Mounting (III) of Air feed Collar Cuff Parts:

[illegible]

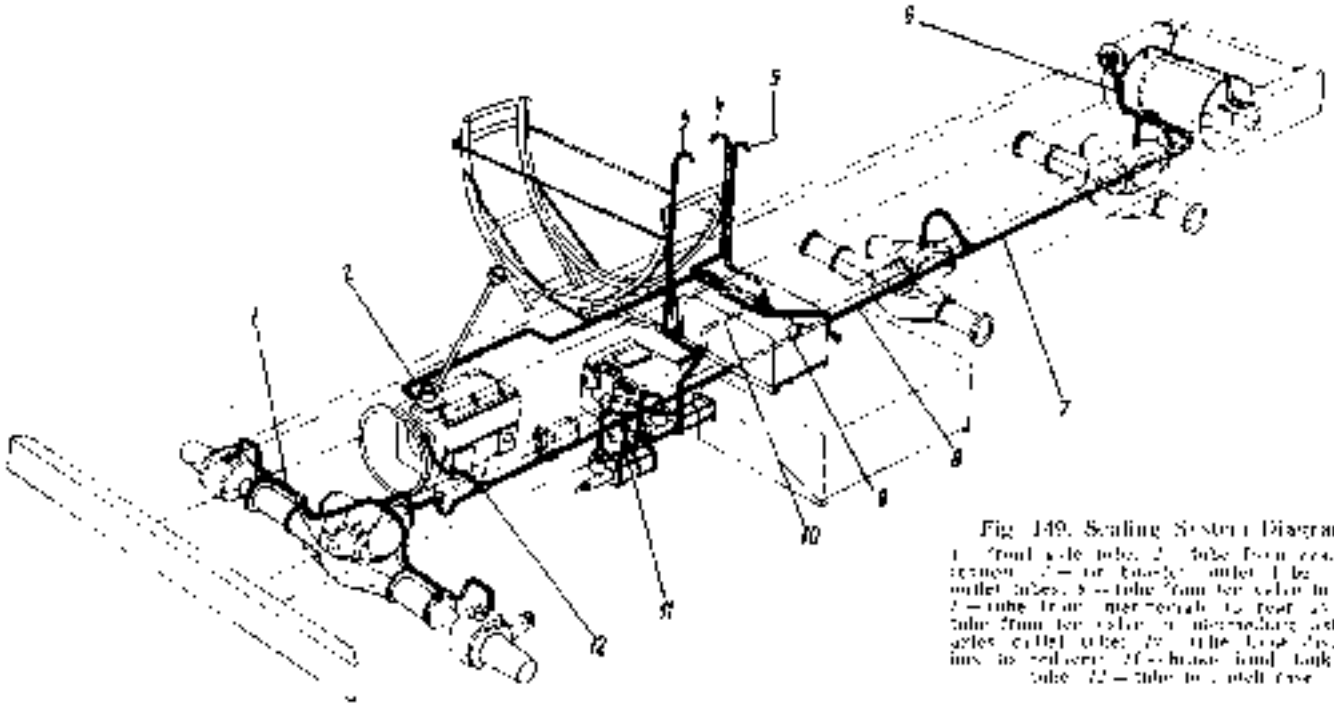

Fig. 149. Sealing System Diagram:

[illegible]

TROUBLE SHOOTING

Trouble	Probable cause	Remedy
	Engine	
Engine fails to start	No fuel in tank	Fill fuel tanks
	Flywheel lock in lower position	Set lock in upper position
	Pipes or fuel tank intake pipe filter are clogged	Flush filter, wash and blow through fuel-feed pipes
	Air entrapped in fuel system	Pump through system, repair if leaking parts
Engine fails to deliver power, smoking	Fuel advance angle is maladjusted	Adjust fuel advance angle
	Air filter is clogged	Clean air filter
	Fuel feed is insufficient	Replace fine fuel filter elements, flush coarse fuel filter
	Governor control lever fails to come to maximum speed limit bolt	Check and adjust speed governor drive
	Adjustment is deranged or injectors are clogged	Readjust or, if need be, clean and flush injectors
	HPFP plunger sticks	Replace plunger pair or readjust pump on bench
Engine knocks	Fuel advance is maladjusted	Readjust fuel advance angle
	Derangement of adjustment of thermal clearances in lining mechanism	Readjust thermal clearances
Oil pressure drops in lubrication system	Oil level insufficient in crankcase	Add oil to normal
	Oil pressure pickup or indicator fails	Replace pickup or indicator
	Oil temperature is excessive	Open oil cooler valve, repair cooling system
	Oil filter elements clogged	Replace filter elements
	Oil pump differential or safety valve is clogged or damaged	Screw out plugs, remove valve and spring. Flush and reassemble valve, refill if it is reversed order. Replace faulty parts, if need be
Oil pressure rises in lubrication system	Oil solidifies	Change oil in compliance with Lubrication Chart
	Lubrication system valve is seized	Repair or replace faulty parts, if need be
Coolant temperature rises in cooling system	Coolant level insufficient	Add coolant to normal level
	Radiator shutter closed	Open shutter
	Hydraulic coupling engaging unit in position O	Set hydraulic coupling engaging unit in position A
	Hydraulic coupling engaging unit fails	Set hydraulic coupling engaging unit in position II for some time, readjust it as soon as possible
	Water pump drive belts are undertensioned or broken	Readjust tensioning or replace belts
	Thermostats fail	Replace thermostats
	Radiator core external surface is soiled	Clean radiator core
	Coolant temperature pickup or indicator fails	Replace coolant temperature pickup or indicator
Coolant is overconsumed	Coolant leaks through joints in cooling system	Tighten joints, replace gaskets and packing rings, if need be
	Coolant leaks through water pump end packings	Replace end packing
	Coolant is entrapped in lubrication system through cylinder lining rubber packing rings or cylinder head rubber gaskets	Replace cylinder lining or head packing rings or rubber gaskets
	Glow-plug Preheater	
Current indicator reads off-scale	Glow plug is grounded	Disconnect wire from left-hand plug terminal holding wire long away from ground and energize glow-plug preheater. If scale goes off-scale, disconnect wire from right-hand plug terminal. If scale does not go off right-hand plug is grounded, so replace faulty plug. On grounding plug check wire insulation, electrothermal relay and storage battery, interlocking relay and, if short circuiting happened on starting by starter, plug switch off relay
	Electrothermal relay coil is shortened	If plugs are correct, disconnect wire which is connected with glow-plug preheater switch-on button from electrothermal relay terminal. If pointer does not go off scale, when glow-plug preheater is energized repeatedly, it indicates that relay coil is shortened. Replace relay

Trouble	Probable cause	Remedy
Current indicator pointer fails to swing	Electrothermal relay coil burns	Energize glow-plug preheater and check voltage across electrothermal relay terminals. If terminal from jack connection side is not live and other terminal is live, it indicates that coil has burnt. Replace relay
	Plugs burn or contact is deranged in circuit	Energize glow-plug preheater and check that each component terminal is live, beginning from plugs. If right-hand plug terminal is live, it indicates that plugs have burnt. Replace plugs and repair circuit
Current indicator reads discharge current value reduced twice (between marks 30 and 0)	One of plugs burns	Energize glow-plug preheater for 5 to 7 s and replace cold plug
Device fails to show flame	Plug is underheated	1. Check time duration from glow-plug preheater switch-on moment to check lamp glow. Replace faulty electrothermal relay. 2. Inspect storage batteries, check fuel terminal connections are tight. Recharge battery, if need be; tighten terminals. 3. Test voltage across plugs which must be (19±0.3) V
	Plug pass-through capacity is underrated	Wash plug filter and nozzle in pure gasoline and blow them through with compressed air. Check pass-through capacity. Replace plug that failed
	Glow-plug preheater fuel system is untight	Check for tightness. Repair fault
	No fuel flow through plugs	Check that fuel flows through plugs. Wash filter and plug nozzle in pure gasoline and blow through with compressed air
Starting Preheater		
Preheater boiler is overheated, water is thrown through preheater filter	Ice plugs are formed in feed branches if water has not been drained fully or if preheater is used incorrectly. Water does not circulate	Warm pipes switching preheater on and off in step of 2 to 3 min periodically, sluicing hot water over pipes
Preheater fails to start, pump unit motor fails to turn	Fan impeller sticks due to freezing of remaining water after washing or fording of truck. Fluid pump impeller sticks because of freezing of remaining water if not drained fully out of cooling system	Warm fan case and fluid pump using materials at hand
	High-voltage source circuit is opened	Check and tighten current-conducting wires terminals
	High-voltage source fails	Disconnect high-voltage wire and secure wire end 3 to 5 mm apart from truck ground. If no sparking is seen when plug is energized, replace h.v. source
	Spark plug fails	Clean or replace plug
	Solenoid valve fails (no click is heard when valve is energized)	Test circuit feeding current to valve, check wire terminals for tightness
	Fuel filter is clogged in solenoid valve or injector	Flush filter and blow it through with compressed air or replace it
	Injector is clogged	Disassemble injector. Wash parts with kerosene or acetone. Reassemble injector and check for spraying when injector is not screwed in burner
Preheater smokes or throws out flame	Fuel pump is maladjusted	Reduce fuel consumption, adjusting fuel pump reducing valve
	Motor speed insufficient	Charge storage battery, check motor
Engine is warmed continuously, preheater burns irregularly	Fuel is fed insufficiently since filter or injector is clogged, fuel pipeline is untight, fuel pump is maladjusted	Flush filters, injector, repair fuel pipeline. Readjust the pump reducing valve
Clutch		
Clutch slips	Clutch release sleeve does not travel freely	Readjust sleeve for free travel
	Friction surfaces are oiled	Dismantle clutch from engine, wash friction surfaces with gasoline
	Friction linings are worn or destroyed	Replace friction linings or driven plates assy
Clutch is disengaged incompletely (clutch drags)	Clutch release drive fails to ensure required travel of clutch release fork shaft lever	Check clutch release drive (reduced full travel, increased free travel, etc.). Remedy defects

Trouble	Probable cause	Remedy
Clutch pedal force increases appreciably. When the clutch pedal is depressed to the stop, it fails to return to the initial position	Clutch booster engaging valve is maladjusted	Readjust the moment of the valve operation
Gearbox		
Engagement of all gears is obstructed. First and reverse gears are engaged with grinding noise	Clutch is disengaged incompletely (clutch drags)	Remedy as required (see section «Clutch»)
Second, third, fourth and fifth gears are engaged with bumps and grinding noise	Synchromesh unit: tapered rings, pin blocking chamfers and slide are worn	Replace synchromesh rings
Gears shift spontaneously	Gear is engaged incompletely due to failure of gear-shift mechanism locks, fork legs or slide blocks are worn, fork fasteners are loose	Tighten fasteners, replace worn parts
Excessive noise	Hard wear or breakage of gear teeth. Breakage of gear bearings. Breakage of shaft bearings	Replace faulty parts
Oil leaks from the gearbox	Wear or poor elasticity of collars Poor sealing in sealed surfaces	Replace collars Draw up fasteners, replace gaskets
Distributor Box		
Excessive noise	Insufficient quantity of oil in distributor box	Add oil to check plug level
	Primary shaft and layshaft are displaced axially in excess of normal	Readjust bearings or replace with new items
Gears shift spontaneously	Gear shift fork or coupling is worn Gear shift coupling and primary shaft splines are worn	Replace worn parts
	Primary shaft is displaced axially	Readjust bearings or replace with new ones
Engagement of gears and blocking of differential are obstructed	Gear splines, front holder or shifter coupling are ragged	Grind surfaces of splines
	Lock sticks	Clean hole for ball
Drive Axles		
Excessive noise in axle	Contact pattern for bevel gears is displaced towards tooth narrow end edge	Readjust meshing
	Clearance in reduction gear bearings	Restore preload of bearings
	Gear teeth working faces are worn or damaged	Replace gears
Wheels and Tyres		
Excessive non-uniform wear of tyre tread pattern	Poor toe-in of steerable wheels	Adjust the wheel toe-in
	Misadjustment of wheel hub bearings and bearings of steering knuckle king pins	Adjust bearings
	Parts of steering rod hinges are worn	Replace worn parts by new ones
	Wheels are out of balance: high radial or side run-out of wheels	Balance wheels. Replace wheels exhibiting high radial or side run-out
	Abrupt braking or taking-off. Driving the truck with tyre pressure which is too low or too high	Observe driving rules and rational methods of driving. Observe strictly norms of tyre air pressure. Do not overload tyres
Steering Gear		
Truck drives unsteadily, steering wheel free travel is in excess of 25°	Pair «worm-segments» is worn	Readjust axial clearance between worm and segment teeth
	Spool fastening nut is loose	Unlock nut, tighten and lock nut by press-fitting nut ferrule in shaft slot
	Parts of steering rod joints, wheel shaft splined fork are worn	Replace worn parts
	Steering mechanism fasteners are loose	Tighten steering mechanism case fastening bolts
Steering gear is hard to operate	Oil level is insufficient in pump tank	Add oil to required level
	Air or water is entrapped in system (foaming in tank, oil seems muddy)	Evacuate air, otherwise, check that all joints are tight; remove and flush gauze filter, inspect gasket under pump manifold. Check header fastening pair bolts for tightness; otherwise, change oil

Trouble	Probable cause	Remedy
Excessive noise when pump operates	Pump fails Pump safety valve seat screws out Oil leaks out of booster control valve Steering control propeller shaft splined joint is seized Oil is insufficient in pump tank	Check pump Disassemble pump, screw in seat Replace booster control valve Remove wheel shaft, flush and lubricate splined joint Add oil to required level
Oil is thrown through pump breather	Filter is clogged or mounted incorrectly Header is deformed Gasket under header is destroyed Excessive oil Gauze filter is clogged Header gasket is damaged Header is deformed	Flush filter Flatten it Replace gasket Level oil normally Check mounting and flush filter Replace gasket Flatten it
Brake System		
Air system reservoirs are not filled with air or filled slowly	Compressor, pressure governor or double safety valve is faulty	Repair compressor, pressure governor and double safety valve
Pressure governor operates frequently. Pilot lamp 8G3/13X (Air) glows on instrument board	Hard leakage of air due to poor tightness of pipe and hose connections, connectors and adapters	Draw up the joints. Replace faulty connectors
Insufficient braking or no braking with the brake pedal depressed to stop	Brake valve is faulty. Excessive stroke of the air booster pistons owing to a large clearance between brake shoes and drums. Pilot lamp 10/PM03 (Brake) glows on instrument board	Repair or replace brake valve. Adjust shoe-to-drum clearance in service brakes
	Friction linings are worn	Replace friction linings and adjust the brakes
	No brake fluid in main cylinder tanks	Locate and eliminate fluid leakage. Prime fluid and scavenge brakes
	Leakage of brake fluid or ingress of air in brake hydraulic drive system	Locate and eliminate fluid leakage. Prime fluid and scavenge brakes
	Inner collar of main cylinder is worn. Piston or booster partition collars are worn: when brake pedal is depressed, air seeps out of air booster (filter or sealing tube)	Replace collars
Brakes drag (being released slowly)	Brake pedal does not travel freely	Readjust brake pedal to free travel
	Mineral oil gets in hydraulic controls, so rubber collars swell	Flush hydraulic controls with alcohol brake fluid, replace collars and pour in fresh brake fluid
	Compensation hole in master cylinder is clogged	Remove tank and clean compensation hole using cia. fib not soft wire
Generator		
Charging current is zero or underrated	Driving belts slip	Readjust belt tension
	Fault in wiring or contact connections to generator, voltage regulator or other parts of circuit. Loose contact between generator and regulator casings	Repair wiring or contact
	No contact between brushes and slip rings:	
	— brushes are jammed in their guides	— turn out brush holder screws, remove and clean brushes and their holders
	brushes are worn	— replace brushes if their height is less than 5 mm
	— slip rings are soiled or oiled	— wipe over slip rings with cloth wetted in gasoline, or remove soil using glass cloth
	voltage regulator fails	— check and replace, if need be
	Rectifier unit is faulty	Replace rectifier unit
	Generator phase lead is broken	Eliminate break
Excessively high charging current (ammeter reads over 50 A even after 15—20 min of engine operation)	Voltage regulator is faulty. Earth fault of generator terminal «Ш» (shunt wire) or of voltage regulator	Replace voltage regulator. Eliminate fault
Excessive mechanical noise from operating generator	Bearing components are worn or bearing is broken	Replace faulty bearing
Starter		
Starter fails (when starter is on, headlamp light inteasly is unchanged)	Break or fault in wiring	Check wires running to starter and eliminate trouble
	No contact between brushes and commutator	Dismantle and disassemble starter. Clean commutator from carbon. Check brushes for easy movement in brush holders and, if need be, clear side faces or replace brushes. Check brush springs and replace them, if necessary

Trouble	Probable cause	Remedy
Starter fails to crank engine or cranks it slowly	Relay is faulty Earth fault in excitation coil Jumper installed between excitation coil leads and relay terminal bolt is broken Storage batteries are discharged or faulty Poor contact in starter power circuit Poor contact between brushes and commutator	Replace relay Replace starter Replace jumper Charge or replace batteries Clean and tighten wire terminals Clean commutator, check brush spring force and easy movement of brushes, eliminate faults
	Engine is cold (in winter) Oil used does not comply with the season Burning of relay contacts Turn-to-turn fault in excitation coil Earth fault of excitation coil wires Wear-out oil inserts in cover on drive side and in intermediate support	Warm up engine Change oil. Dress relay contacts Replace starter Replace inserts, feed oil to felt gaskets
Starter speeds up but fails to crank engine	Drive is faulty	Replace drive
Relay operates irregularly (starter is switched on and then immediately off)	Relay holding winding is broken	Replace relay
Drive gear fails systematically to mesh with flywheel rim. Relay operates normally	Starter relay is maladjusted Seizing of drive on shaft due to absence or poor quality of lubricant or due to presence of clutch wear products on shaft Milling of drive gear teeth Dealing of flywheel rim Self-disassembling of drive	Adjust relay Remove seiling from shaft and splines, lubricate them with grease LITHOL-24 or ZIITA, or mineral oil Replace drive Replace flywheel rim, if need be Replace drive
Storage Batteries		
Battery fails to ensure required engine rpm	Battery overdischarged Starter feed voltage dropped excessively	Charge battery, check generator and voltage regulator Clean out battery terminals and wire shoes. Coat them with petrolatum. If needed, take up starter wire shoes
Battery self-discharging accelerated	All or some battery cells faulty Short-circuited battery outlets with dirt or electrolyte splashed on battery surface Electrolyte fouled with impurities	Forward battery to repair Wipe up battery with dry cloth wetted in 10% solution of spirit or ammonia or soda ash Discharge battery by current equal to 1/10 of battery capacity down to 1.1 - 1.2 V per battery cell. Drain out electrolyte, wash battery, pour in fresh electrolyte and charge battery
Electrolyte level in battery drops too quickly	Electrolyte boils out Battery monoblock damaged Electrolyte level excessive	Check voltage regulator Forward battery to repair Suck out surplus electrolyte with rubber syringe
Electrolyte pours out from vent hole of one or several battery cells during charging	Charging current excessive Short circuit in one of battery cells	Check voltage regulator Forward battery to repair
When charging fully discharged battery, voltage and electrolyte temperature rise quickly with intensive gassing, while density rises insignificantly	Sulphating of plates which can occur if battery not used for long, or continuously used at reduced electrolyte level or systematic undercharging	Sulphating of plates should be remedied by charge — discharge cycle with current not over 1/20 of battery capacity at initial electrolyte density not over 1.12 g/cm³. Badly sulphated plates should be rejected

PECULIAR FEATURES OF OPERATION

PREPARATION OF NEW TRUCK FOR SERVICE

Before putting the truck into service, check complete set of components and accessories, correspondence of the chassis and engine serial Nos to those indicated in the shipping documents of the truck. Install in place articles and accessories supplied with the truck according to the list of standard equipment.

— windshield wiper blades;
— rear-view mirrors;
— windshield washer tank;
— first-aid kit casing;
— top bows with braces and the canopy (if need be);
— spotlight, etc.

Depreserve tools and accessories and put them in their allotted places in accordance with section «Location of Tools and Accessories in Ural 4320-02 Trucks» of this Manual.

Be sure to carry out servicing of the truck in the extent prescribed by the daily maintenance (DM). Additionally check and, if need be, adjust tensioning of the drive belts of the fan hydraulic coupling, generator and water pump; check availability of oil in the fuel advance injection automatic coupling, gearbox, distributor box, drive axles, booster pump tank, and steering gear case. Top up oil, if required.

Check level of electrolyte in storage batteries, level of the storage battery charge and re-charge the battery as required. Check wire lugs and battery terminals for proper contact.

Fill the fuel tanks with fuel and prime the engine fuel system using the fuel-feed hand-operated pump.

ENGINE START AND STOP

Sequence of operations carried out for starting the engine depends on heat condition and also on an ambient temperature. The engine could be started, if the storage battery is in good order, without preheating at an ambient temperature to minus 10 °C. If an ambient temperature drops from minus 10 to minus 20 °C, use the glow-plug preheater for facilitating engine startup, at a temperature from minus 20 °C and lower temperatures make use of a starting preheater. If the storage batteries are undercharged and for the purpose of enhancing the service life of the engine, it is recommended by the Ural Automobile Works to use the starting preheater also at an ambient air temperature above minus 20 °C.

Engine Start without Warming

The cold engine is started at an ambient temperature down to minus 10 °C as follows:

1. Set the gearbox control lever in the neutral position.
2. Close the radiator shutter.
3. Switch on the storage battery.
4. Energize the instrument, setting the ignition key in the middle position.
5. Set the engine stop lever in the working position (shift it thrusting against the panel).
6. Depress the fuel-feed control pedal till the position that corresponds to medium rotational speed of the crankshaft, and the clutch pedal till stop.
7. Holding the pedal depressed, switch on the starter.
8. As the engine starts, switch off the starter releasing the ignition key. Hold the fuel-feed control pedal in depressed condition that corresponds to medium speed of the crankshaft, until the engine runs steadily. Using the speed control knob, adjust the crankshaft rotation at minimum speed.

If the engine fails to start, proceed repeatedly as above. If the engine fails still in three attempts, find the fault and repair it.

Before starting a warmed engine, set the fuel-feed control pedal in the position that corresponds to medium speed of the engine crankshaft and release the pedal. Switch on the starter and after the engine runs steadily, release the ignition key and fuel-feed control pedal.

Cold Engine Start with Use of Glow-Plug Preheater (ЭФУ)

Sequence of operations.

1. Using the fuel feed hand-operated pump, pump through the engine fuel system (after parking for longer than one day).
2. Switch on the storage battery.
3. Set the gearbox control lever in neutral position.
4. Energize the instruments turning the ignition key in the middle position.
5. Set the engine stop knob in the working position (shift it thrusting against the panel).
6. Depress the glow-plug preheater switch-on button and hold it depressed until the pilot lamp glows.
7. Depress the fuel-feed control pedal to condition that corresponds to medium speed of the crankshaft.
8. After glowing of the pilot lamp, depress the clutch pedal fully and switch on the starter by turning the key in the extreme right hand position and holding the button depressed.
9. As the engine starts, switch off the starter, holding the switch-on button depressed until the engine runs steadily, then, smoothly release the clutch pedal and preheater button. If the engine fails to start, proceed repeatedly as described above with an interval of 1—2 min.

Cold Engine Starting with the Use of Starting Preheater

For preheating and starting the cold engine, if the cooling system is primed with low-freezing coolant:

1. Raise the hood.
2. Switch on the pumping unit using switch *1* (see Fig. 55) for 10—15 s.
3. Energize the spark plug by switch *7* (spring-loaded) and hold the switch knob in turned position during the time determined by the ambient air temperature: 30 s at a temperature above minus 30 °C; 60 s at a temperature from minus 30 °C to minus 50 °C.
4. Energize the spark plug by switch *4* (spring-loaded) and at the same time, keeping the spark plug energized, turn on the pumping unit using switch *3*, and energize the solenoid valve by using switch *2*. Hold the spark plug switch knob (for 20 s, maximum) until a characteristic roar is heard in the boiler indicating ignition of fuel in the burner. If the preheater is in good repair it should be started during 10 to 15 s.
5. Release the spark plug switch knob (the plug is deenergized). Continuous uniform roar in the boiler testifies to steady operation of the preheater.

If the preheater fails to start, turn off the solenoid valve and the pumping unit and after 1 minute restart it in the above sequence. If the preheater fails to start in two successive attempts, find and eliminate the cause of trouble.

6. Lower the hood leaving a gap of 100—150 mm.
7. When liquid in the engine cooling system is warmed up to 70—75 °C, as indicated by the coolant temperature indicator on the instrument board, deenergize the solenoid valve, scavenge the gas ducts of the boiler for 20—30 s and switch on the pumping unit.
8. Start the engine, as described in subsection «Engine Start Without Warming».

If water is used in the engine cooling system, warm up and start the engine as follows:

1. Prepare 32 ltr of clean water.
2. Make sure that all the four drain cocks of the preheating system and the preheater cock have been closed after full draining of water, when the truck was parked.
3. Start the preheater as described above.
4. After 10—15 s of preheater operation, fill the boiler with 16 ltr of water through filler *11* (see Fig. 54), screw on plug *10* of the filler neck. The radiator filler plug should be left open. If the preheater stops occasionally, start it repeatedly, if it

still fails, drain water out of the system immediately.

Find and eliminate the trouble in the preheater, then start the preheater and continue warming-up in the sequence described above. In doing this close the hood leaving a gap of 100—150 mm.

5. Warm the engine until the radiator filler steams vigorously.

6. Deenergize the solenoid valve, scavenge the boiler gas ducts within 20—30 s and switch off the pumping unit, depress the clutch pedal fully.

7. Start the engine as described in the subsection «Engine Start without Warming».

8. Open the cock of the cab heater.

9. Add water through the radiator filler neck until the system is filled and close the radiator plug.

Engine Stop

Before stopping the engine, let it run during 1—3 min unloaded at medium speed; then speed down to minimum and pull out the knob till stop.

RUNNING-IN (DREVING) A NEW TRUCK

Service life, reliability and economical operation of the truck depend on the running-in of the parts in the pre-service period. In the course of initial 1000 km of run, carefully service the truck abiding by the service regulations described below. When driving the truck, watch that units do not overheat. During initial 1000 km of run:

— warm the engine at the crankshaft speeds of 1200—1600 min^{-1};

— do not exceed the speed in the first gear — 5 km/h, in the second — 10, in the third — 20, in the fourth — 40 and in the fifth — 50 km/h;

— do not drive the truck under heavy road conditions and with a trailer;

— do not reduce air pressure in the tyres.

Two times take up wheel fastening nuts after 100—150 km and 200—300 km of run.

When running in Ural-4420-02 and Ural-44202-02 bolster trucks during initial 1000 km of run, drive on hard-surface road entrained with a semi-trailer of total mass of 12 t maximum.

After 1000 km of run, proceed as described in section «Maintenance in Pre-service Period».

DRIVING TECHNIQUE

If the truck is driven correctly, its service life would be prolonged and trouble-free operation would be ensured; hence, the truck could be driven at average travelling speeds with minimum consumption of fuel. The truck could cross over heavy road sections provided all the mechanisms are applied skilfully.

If the truck tows a trailer or if it is driven under heavy road conditions, start in the first gear only. In crossing over heavy road sections (snow, mud, soft soil, sand and the like), block the distributor box differential and, if need be, reduce the air pressure in the tyres to the desired level that corresponds to the best passability across this section (if the truck has a centralized tyre inflation system).

Slipping of drive wheels when the truck becomes immovable or driving of the truck when the wheels slip, with the differential unblocked causes quick wear of tyres and of the distributor box differential mechanism.

Otherwise, unblock the distributor box differential so as not to load the power transmission additionally. Engage a low gear in the distributor box, when crossing over a heavy section of the road or when climbing a steep upgrade.

Shift the distributor box from a higher to a lower gear only when the truck has been stopped. Do not set the distributor box control lever in the neutral position if a gear is engaged in the gearbox or if the auxiliary power take-off is connected.

Brake the truck smoothly, depressing the pedal gradually. When descending a long downgrade, brake the truck with the use of the engine applying the auxiliary brake. In this case, check that the engine crankshaft speed approaches the rated one, but does not exceed 2600 min^{-1}. If the engine speeds up in excess of 2600 min^{-1}, brake the truck vigorously by applying the wheel brakes.

Caution! Do not shut down the engine when driving on a lengthy downgrade. To hold a stopped truck on a downgrade, use the parking brake. **When driving on slippery or ice-covered road, be careful since the truck may skid sideways.**

If the truck is outfitted with a centralized tyre air pressure control system, when driving on improved road with specified load, check that air pressure in the tyres is 320 kPa (3.2 kgf/cm^2). When carrying passengers or cargo of 3000 kg maximum in mass, adjust pressure in the tyres equal to 220 kPa (2.2 kgf/cm^2).

When driving on cobble-stone, crushed-stone, gravel road, on worn-down asphalt surface highway, on earth-roller or snowrolled road, pressure in the tyres may be adjusted to 250 kPa (2.5 kgf/cm^2). In this case the driving speed should be 60 km/h, maximum.

When crossing hard-to-pass sections, it is possible to reduce the inner tyre pressure. At that the maximum run and speed should not exceed the values given in Table 10.

Do not reduce the air pressure in the tyres greater that it is needed for particular load. On soft ground, wet plough-land, virgin snow and sandy sections, drive the truck smoothly, without jerks, wheel slipping or stops. Small snow humps and short upgrades should be crossed after accelerating the truck. Remember, that driving at the low tyre pressure should be limited, reduce the pressure only in the extreme cases. It is prohibited to drive the truck with tyre pressure reduced to obtain smooth running.

When driving after the pressure has been reduced, follow indications of the tyre pressure gauge to correspond to the road conditions.

If the truck is equipped with constant-pressure tyres, do not drive at the reduced tyre pressure as this will lead to premature wear of the tyres. If the truck drives continuously, pressure in the tyres may rise due to heating. Do not reduce pressure in the heated tyres so as to reduce rolling resistance and save the fuel.

Fording. The truck outfitted with a sealing system could cross fords, if specially prepared, of up to 1.7 m in depth (taking into account the wave height). Crossing a deep ford requires great care. Prior to that, thoroughly inspect the bottom, see for no deep holes, large stones, boggy areas. Carefully select and

check the places where the truck goes in the water and out of it.

For crossing fords of up to 1 m in depth:

— close the radiator blind;

— set the air pressure in the tyres of 320 kPa (3.2 kgf/cm²);

Table 10

Type of road	Pneumatic tyre pressure, MPa (kgf/cm²), min	Maximum speed, km/h	Maximum road width for service life, km
Hard-to-pass marshy terrain, virgin snow and loose sand	0.05 (0.5)	15	600
	0.1 (1.0)	25	800
	0.15 (1.5)	30	1400
Roads of all kinds only for pumping up period	0.1 – 0.15 (1.0 – 1.5)	40	1400

Note. When pumping up the tyres from the minimum pressure of 0.05 MPa (0.5 kgf/cm²) to 0.15 MPa (1.5 kgf/cm²), it is recommended to stop the truck.

If the ford is deeper:

— set the hydraulic coupling engaging unit for releasing by force. In fording, do not run the fan since the fan driving belts could be deranged;

— disconnect the ejection system, set shutter lever *11* (see **Fig. 57**) in square with the pipeline longitudinal axis;

— place rubber gaskets into plugs of storage battery and take up them tightly;

— clean the outlet pipe flange fitting surface from dirt, fit on the fording valve with its flap hinge facing upwards;

— check fasteners on the gas exhaust and ejection systems.

For fording, engage the first or second gear in the gearbox and a lower gear in the distributor box, lock the inter-axle differential mechanism. Enter the river slowly, raising no waves and avoiding manoeuvring. The time of driving the truck in water should not exceed 15 min.

To avoid penetration of water and soil in the tools box press tightly its cover with the central screw. On crossing a ford open the tools bag and remove water, if available and dry the tools.

On crossing a ford, check the oil level in the truck engine and other units. High oil levels, water drops on the oil level gauge or change of oil colour are the signs warning that water has found way in. Therefore, change oil, if water is found in the engine crankcase. Pack fresh grease in sliding bearings and joints as soon as possible. If the engine stalls in fording, make two or three attempts to start the engine by the starter with intervals of 1 min. If the engine fails to start, pull the truck out of the water.

If the truck stuck in water for longer than 20 min, tow it to the nearest service station and service it there. If the truck moves by its own, check all the main components and inspect chambers in wheel hubs and front axle knuckles (for traces of water). If the oil level in the units is high, reduce it to the required level and change oil in the nearest service station.

On crossing a ford prepare all components for operation in normal road conditions and repair all water leak-proof connections of units. For keeping the truck ready for fording, regularly inspect hoses, tubes, their joints, packing of units and repair in due time.

Crossing trenches, ditches and pits. Drive at low speed, block the distributor box differential mechanism in adverse conditions. Approach the trenches at square angles; otherwise, the load could be re-arranged and the unloaded wheels could slip.

Driving with a trailer or semitrailer.

To ensure the serviceability of the hitching device use hitching loop of 90 mm in inner diameter and 42 mm s.a., the towing hook with the throat diameter of 48 mm and width in the throat zone of 69 mm.

Maximum permissible dimensions: loop cross-section 38 mm; hook throat 52 mm; hook width 66 mm.

If the towing hooks and hitching loops are worn-out considerably, they should be replaced with new ones.

When manoeuvring, avoid folding of the trailer until the trailer tow-bar thrusts against the frame side-member end faces. Otherwise, the trailer loop could be seized in the towing hook throat and the towing arrangement broken.

If a very difficult terrain is to be crossed, unhitch the trailer and after crossing, pull it to the truck using the winch. Mind that three or four coils should be left on the winch drum. Pull the trailer at the engine crankshaft medium speed. Do not tow the trailer by the winch rope.

If Ural-43203-02 truck drives with a trailer (or if it manoeuvres) on heavy road sections, be careful that spare wheel and its holder do not come in contact with the trailer.

The centre of gravity of a bolster-type truck is higher than that of a side-board truck; therefore, when driving, take utmost care. Apply brakes of the road train smoothly.

Remember that the road train will move most advantageously on heavy road, if the truck and semitrailer are in line in horizontal plane or if an angle is rather small. As the angle increases, a side force develops tending to overturn the truck or to cause slippage sideways.

Caution! When the truck moves with the auxiliary brake engaged on a slippery road having a low adhesion ratio and with no solenoid valve engaging the service brake system on trailers and semitrailers, folding and skidding of the trailer are possible.

MAINTENANCE

Types of maintenance. By schedule and labour applied, the maintenance is subdivided into the following types:

— daily maintenance (DM);

— pre service maintenance:
First maintenance (M-1);

— second maintenance (M-2);

— seasonal maintenance (SM).

Schedule of maintenance. The daily maintenance is to be carried out before the truck leaves and after it returns.

The pre-service maintenance is to be carried out after first 1000 km of run.

The seasonal maintenance is to be carried out twice yearly — in spring and in autumn, together with the next scheduled maintenance. The schedule

of M-1 and M-2 may be corrected depending on the truck service conditions and climatic regions to GOST 21624—81 and the «Rules for Maintenance and Repair of Automotive Vehicles» (Publishing House «Transport», Moscow, 1986).

For the first category of service conditions, the M-1 should be carried out every 4000 km of run, the M-2, every 16,000 km.

LIST OF MAINTENANCE JOBS

Description	Technical requirements	Instruments, tools, accessories and materials needed
	Daily Maintenance (DM)	
Servicing before leaving		
Inspect the truck and check absence of fuel, oil, brake fluid and coolant leaks. Eliminate troubles, if any		
Check the brake fluid level	If the brake fluid level drops below 1/3 of the tank volume, top up the fluid. Add fluid to the level of 15–20 mm below the upper edge of the tank filler	
Before starting the engine.		
check level of oil in the engine crankcase and top up, if required	Prior to checking on a flat ground. Oil level in engine crankcase should be between marks *B* and *H* on oil dipstick	Clean rag, vessel, with oil or oil filling volume
Check level of coolant in the radiator and top up, if need be (see section «Cooling System»)	Coolant level should be above the cooling pipe and face in the upper tank of the radiator (see Lubrication Chart)	Vessel with low-freezing fluid, measuring rule
Check operation of the generator reverse current indicator (see section «Electrical Equipment. Generator»)	The current indicator should show the charging current	Current indicator
At above-zero temperatures check presence of water in the windshield washer pump tank. If necessary, fill the tank with water. At sub-zero temperatures drain water from the tank		Vessel
Check good repair and serviceability of lighting devices, light and sound alarms, instrumentation and windshield wipers	Faulty units cannot be tolerated	
Check for good repair of:		
steering gear	Steering rod and booster pin ends should be cottered, play in the joints cannot be tolerated, loose fasteners are impermissible	
service brake system	Check serviceability of pilot lamps 3, 4 (see Fig. 15) by pressing push-button 6: the pilot lamps should light up. Replace bulbs in the pilot lamps if necessary.	Check pressure gauge, brake failure pilot lamp on the instrument board
	The hydraulic and air systems should be tight. Depress and hold the brake pedal for 1–2 min.	
	If after this period of time pilot lamp 3 lights up, it signifies failure of the inner collar on the brake main cylinder. In this case replace the collar. Note that there must be no visible movement of the pointers of the two-pointer pressure gauge	
	If the pointers of the two-pointer pressure gauge move noticeably or if pilot lamp 4 lights up on the instrument panel at a high leakage of air, eliminate the fault in the air section of the drive	
parking brake system	If the shoes are pressed on the drums fully, the pawl should fall at the 4th (5th) tooth of the quadrant and the parking brake pilot lamp should light up. Should need arise, adjust the shoe-to-drum clearance	
Check the towing arrangement (for operation with a trailer)	The towing hook pin should be locked and the hook catch should be cottered	
Check the tyres for good condition and the wheels for proper fastening	Tyres should be free of injuries and should not have foreign objects in the tread. The wheels should not have mechanical damage. Wheel nuts should be tight	
Inspect fastening of the bolster and underframe of bolster trucks	Fasteners of the bolster and underframe should be tight	
In cold season drain condensate from the air reservoirs after each departure from a heated garage	Drain condensate when the air reservoirs are under pressure	

Description	Technical requirements	Instruments, tools, accessories and materials needed
Servicing after trip		
At below-zero temperatures to avoid moisture condensation in the fuel tanks, fill fuel tanks completely		Fuel filling column
Drain condensate out of air reservoirs	When draining condensate, check that air reservoirs are under pressure	
In winter drain condensate after each departure from a heated garage		
Wash the truck and clean the cab and bed	Use wet cleaning cloth or a brush when cleaning the cab inside. Do it with the mat removed. Washing inside the cab is not permissible. If water is accumulated in the cab floor clear of dirt the drainage-coat holes in the bottom portion of the door aperture and in seating holder, then drain water. In the underhood area wash the electrical equipment by a spraying jet. After washing dry the places where moisture may congregate	Hand washing, wiping material, brushes
Servicing in initial service after first 1000 km of run		
Inspect the truck for leaks. Check for fuel, oil, brake fluid or coolant leaks, repair if necessary	Leaks are not allowed	
Power unit		
Inspect and tighten fasteners		
engine crankcase	Untightness is not allowed	Box wrench 13×17, crankshaft turning bar
starter	Ditto	Wrench 22×24, ring wrench 24×27
clutch case and flywheel case	»	Ring wrench 17×19
gearbox case and clutch case	»	Ring wrench 24×27, wrench 22×24
power unit front and rear supports	»	Box wrench 19×22, wrenches 22×24, 24×27, 27×30, 12×13, crankshaft turning bar, flat chisels, portable lamp
injector fastening clamps	»	Ring wrench 17×19
exhaust manifolds	»	Box wrench 17×17, crankshaft turning bar
generator	»	Wrenches 12×13, 17×19
muffler and intake pipes	»	Box wrench 17, ring wrench 17×19, combination wrench 14×14, wrenches 17×19, 12×13
Check and readjust		
Tensioning of driving belts of water pump and fan (see section «Cooling System»)	When pressing on each belt (angle of 40 N (4 kgf), sag is 15–22 mm)	Rule, wrenches 12×12, 17×19, crankshaft turning bar
Thermal clearances between tappets and valves after testing belts of cylinder heads and rods of rocker shafts (see section «Timing Mechanism»)	Clearance for intake valves — 0.25–0.30 mm, for outlet valves — 0.35–0.40 mm	Feeler gauge, heads for box wrenches 17 and 19, combination wrench 14×14, wrench 12×13, screwdriver, hammer, tester, crankshaft turning bar
Check and if need be adjust the clutch pedal free travel	Clutch pedal free travel should be within 50–60 mm with no air pressure in the pneumatic system	Wrench 17×19, flat pliers, rule
Steering control		
Check the oil level in the booster pump tank, replenish if need be	The oil level is indicated between marks on the oil level gauge	Oil level gauge, cleaning cloth
Tighten nuts of fastening pins.	Untightness is not allowed	
Steering rods		Wrench 21×27, ring wrench 21×27, flat pliers
sector	Ditto	Ring wrench 24×27, box wrench 36, flat pliers, screwdriver, hammer, tyre iron with jack turning bar
Tighten steering wheel case fastening bolts	»	Ring wrench 24×27, wrenches 17×19, 22×24
Running gear		
Inspect and tighten nuts of		
steering knuckle levers, king pin bearing bushes and spherical support flanges	»	Ring wrench 24×27
front spring pin locking wedges	»	Wrench 17×19
front spring U-bolts	»	Box wrench 30×32 for spring U-bolt nuts, tyre iron with jack turning bar
rear spring U-bolts	»	Box wrench 27×30 for wheel nuts, tyre iron with jack turning bar
torque rod pins	»	Wrench 46 head, tyre iron with jack turning bar, flat pliers, screwdriver, drill, hammer
wheels	»	Box wrench 27×28 for wheel nuts, tyre iron

Description	Technical requirements	Instruments, tools, accessories and materials needed
Check and, if need be, draw up fastening bolts:		
hammer pin and brackets	Looseness is not allowed	Box wrench 30×32, tyre iron with jack turning bar
front brackets of front springs to lower shelf of side frame members	Ditto	Wrench 22×24
brackets of upper torque rods to axle case	»	Box wrench 22, crankshaft turning bar
holster (for holster trucks)	»	Ring wrench 24×27, wrenches 17×19, 22×24
low and cross member	»	Wrench 22×24
Check and if necessary, tighten fastening of drive axle final drives	»	Ring wrenches 17×19, 22×24, combination wrench 24×11, wrench 17×19, flat pliers, screwdriver, wrench 22×24
Service brake system		
Adjust clearance between wheel brake shoes and drums (see section «Service Brake System»)	Do not disturb original adjustment of shoe support pins. On readjusting check that brake drums do not heat when the truck drives	Box wrench 19×22, crankshaft turning bar, wrench 19×22, 5-t jack, tyre iron with jack turning bar
Electrical equipment		
Check electrolyte level and density in storage batteries; add distilled water, if need be, charge the battery	See section «Storage Battery»	Wrench 12×13, vessel with distilled water, glass tube dia. 7–8 mm, density meter
Check and if need be, adjust headlamps (see section «Lightning and Signalling Systems»)	When adjusting lamps, if the truck has been unloaded and placed on flat ground	Screwdriver, specially marked out screen
Check for reliable fastening of wire terminals	Loosening is not permissible	Flat pliers, screwdriver, knife, insulating tape
Check for rubber jackets on rear lamps, side turn signal flashes, ground switch, brake light switches		Visually
Check for fastening of battery container brackets to frame	No loosening is permissible	Wrenches 17×19, 22×24
Check and if need be, take up fasteners of starting preheater high-voltage source	Ditto	Wrench 9×10
Lubrication		
Drain oil, clean out and fill	Oil used during 1000 km of new truck run can be reused after filtering or settling	
gearbox (see section «Transmission» and Lubrication Chart)	Oil level should reach upper mark of dipstick. No oil leakage through plugs is permissible	Wrench 22×24, oil collecting vessel, model 133M oil dispenser tank, wiping material
distributor box (see section «Transmission» and Lubrication Chart)	Fill oil up to check hole in case rear wall. No oil leakage through plugs is permissible	Wrenches 17×19, 24×27, oil collecting vessel, model 133M oil dispenser tank, wiping material
steering mechanism case (see Lubrication Chart)	Fill oil up to filler hole edge. No oil leakage through plugs is permissible	Wrenches 17×19, 22×24, oil collecting vessel, model 133M oil dispenser tank, wiping material
drive axle reducers (see Lubrication Chart)	Ditto	Wrenches 22×24, 24×27, oil collecting vessel, model 133M oil dispenser tank, wiping material
Lubricate according to Lubrication Chart:		
clutch release sleeve bearing	Lubricate by grease cup up to three strokes of gun	Lever plunger gun, wiping material
clutch release yoke small bushes	Ditto	Ditto
Check oil level in fuel injection advance coupling, add if required (see Lubrication Chart)	Oil level should be up to the top edge of the hole. Fill oil through one of the holes available (which is found on top) until oil appears from another hole	Screwdriver, funnel, vessel

Maintenance No. 1 (M-1)

On a new truck during M-1 replace filtering elements of the oil cleaner filter and the fuel filter, flush the oil centrifugal filter and change oil in engine crankcase, wash the breather gauge filter, take up the play of telescopic shock absorber case (fasten or tighten up where leakage is seen), lubricate the bearing of clutch disengagement and of clutch disengagement fork shaft bushing

Description	Technical requirements	Instruments, tools, consumables and materials needed
Engine		
Drain residue from coarse and fine fuel filters	No fuel leakage through drain plugs is permissible	Combination wrench 14×14, vessel, wiping material
Running Gear		
Check and, if need be, draw up nuts of wedges fastening front spring pins	Tightness is not allowed	Wrench 17×19
Steering control		
Check oil level in the booster pump tank replenish, if need be	Oil level is between marks on the oil level gauge	Oil level gauge, cleaning cloth
Service brake system		
Adjust clearance between shoes and drums of wheel brakes (see section «Service Brake System»)	When readjusting the brakes, do not disturb the original setting of shoe support pins. After readjusting the brake drums should not heat in travelling at the truck	Box wrenches 19×22, crankshaft turning bar, wrench 19×22, hydraulic jack, tyre iron with turning bar
Electrical equipment		
Clean battery surfaces from dust, dirt and clean through vent holes in plugs	Battery surfaces should be clean, holes in plugs, unclogged	Cleaning rag, dia. 2 mm wire
Check electrolyte level in storage batteries, add distilled water, if need be (do this at least once in two weeks)	Electrolyte level should be 10—15 mm above safety guard of storage battery	Vessel with distilled water, glass tube dia. 3—5 mm and 190—200 mm in length
Check wire lugs and lock connections for tightness and security	Wire lugs are connected reliably	Combination wrench 14×14, wrench 17×19
Lubrication		
Lubricate against the truck lubrication chart:		
Front spring pins	Pack until fresh grease appears out of joints between pins and eyes	Grease lever-plunger gun or solid oil pump, wiping material
Joining arrangement brakes of trailer (if fitted)	Pack until fresh grease appears	Grease lever-plunger gun, wiping material
Check and, if need be, top up oil in drive axle steering knuckle housings to notch	Fill oil up to filler hole edge. No oil leakage through plugs is permissible	Wrench 27×30, model 133M oil dispenser tank, wiping material
Every Third M-1 * do the following:		
Replace filtering elements of oil filter (see section «Lubrication System»)	No oil should leak through seals	Ring wrench 17×19, wiping material, vessel for oil
Wash centrifugal oil filter (see section «Lubrication System»)	Ditto	Ring wrench 17×19, wrench 22×24, screwdriver, scraper, washing bath, wiping material
Change oil in engine crankcase (see Lubrication Chart)	Fill oil up to mark B on the oil level gauge. Oil leakage through drain plug is not to be tolerated	Ring wrench 24×27, funnel, oil dispenser column with pump unit, vessel for used oil, wiping material
Maintenance No 2 (M-2)		
Carry out operations described for M-1 and proceed as below:		
Engine		
Check that the radiator is secured correctly	Looseness is not allowed	Wrench 17×19, flat pliers
Check tightening of driving belts, tension them, if need be	See section «Engine. Belt Tensioning Adjustment»	Wrenches 12×13, 17×19, crankshaft turning bar, rule
Inspect the air cleaner for clogging and, if need be, clean cardboard filtering element (see section «Engine. Engine Air Intake System»)	If vacuum at intake manifold is more than 7 kPa (700 mm water column) and the crankshaft speed of 2000 min⁻¹, clean or replace the filtering element. The latter should not have injuries, corrugation, torn pleats, cardboard spalling	Pressgauge to GOST 2405—80 with adapter, vessel with cleaning agent solution (OП-7, or OП-10 to GOST 8433—57), air hose from compressor
Inspect air cleaner and hose fasteners in the air intake system	Tightness is not allowed	Screwdriver
Replace fine fuel filter filtering elements (see section «Fuel System»)	Fuel leaks and air ingress through packing are not allowed	Ring wrench 17×19, vessel for fuel, cleaning cloth

* If substitute oil grade M-6z/10B is used, change oil and attend to the oil filters every M-2

Description	Technical requirements	Instruments, tools, accessories and materials needed
Flush the coarse fuel filter (see section «Engine Fuel System»)	Fuel leaks and air ingress through packing are not allowed	Ring wrench 17×19, box wrench 13×17, wrench 12×13, crankshaft turning bar, vessel for fuel, bath for washing units, wiping material
Drain residue from fuel tanks	Oil leakage through drain plug is not permissible	Combination wrench 11×14, vessel, cleaning cloth
Inspect and tighten if need be: engine oil case fasteners	Untightness is not allowed	Box wrench 13×17, crankshaft turning bar
power unit front and rear support fasteners (If clearance is formed between rear support cover and rubber pad, remove shims)	Ditto	Box wrench 19×22, crankshaft turning bar, wrenches 12×13, 22×24, 25×27, 27×30, flat pliers, portable lamp
muffler and intake pipes fasteners	»	Box wrench 17, ring wrench 17×19, wrenches 12×13, 17×19, combination wrench 14×14
Check and readjust thermal clearances between tappets and valves after checking tightness of cylinder head bolts and rocker stand nuts	Clearance for inlet valve should be 0.25–0.30 mm, for exhaust valve, 0.35–0.40 mm	Torque wrench, box wrenches 17 and 19 heads, wrench 12×13, combination wrench 11×14, screwdriver, hammer, feeler, crankshaft turning bar
Power transmission		
Check the clutch release pedal free travel, adjust if necessary (try clutch booster for functioning)	Pedal free travel should be within 50–60 mm with no air pressure in truck pneumatic system	Wrench 17×19, flat pliers, rule
Check and tighten propeller shaft flange fasteners	Untightness is not allowed	Combination wrenches 14×14, wrenches 17×19, 22×24
Check and tighten fastening nuts ball support flanges	Untightness is not allowed	Ring wrench 24×27
steering knuckle levers and king pin bearing caps	Ditto	Ditto
Check and tighten, if need be, drive axle reduction gear fasteners	»	Ring wrenches 17×19 and 22×24, combination wrench 14×14, wrench 17×19, flat pliers, screwdriver, wrench 22×24
Running gear		
Check and if need be, tighten fastening nuts of: torque rod pins	Untightness is not allowed	Wrench 46 head, tyre iron with jack turning bar, flat pliers, screwdriver, cotter pin, hammer
front spring U-bolts	Ditto	Box wrench 30×32 for spring U-bolt nuts, tyre iron with jack turning bar
rear spring U-bolts	»	Box wrench 27×30 for wheel nuts, tyre iron with jack turning bar
Check and if need be, tighten fastening bolts of: balancer pin on assembly with balancer bracket	»	Box wrench 30×32 for spring U-bolt nuts, tyre iron with jack turning bar, flat pliers
front spring lugs	»	Ring wrench 24×27
Check and, if need be, tighten fasteners of: upper torque rod brackets	»	Box wrench 22, crankshaft turning bar
balancer brackets and fifth crossarm for lower shell	»	Wrench 19×22
front spring rear bracket braces (see section «Running gear. Truck Suspension»)	»	Hammer, chisel, wrenches 17×19, 22×24, ring wrench 22×24
bolster on underframe and frame (for bolster checks)	»	Ring wrench 24×27, wrenches 17×19, 22×24
Inspect tyres, wheels and, if need be, interchange or replace them	See section «Wheels and Tyres»	Hydraulic jack, tyre iron with jack turning bar, box wrench 27×38 for wheel nuts, defly TAPO for handling wheels, wrenches 12×13, 17×19
Steering control		
Check and tighten fastening nuts of steering gear	Untightness is not allowed	Wrenches 19×22, 22×24, ring wrench 24×27
steering rod pins	Ditto	Ring wrench 24×27, box wrench 30×32, flat pliers, tyre iron with jack turning bar
booster	»	Ring wrench 24×27, box wrench 36, flat pliers, screwdriver, hammer, tyre iron with jack turning bar

Description	Technical requirements	Instruments, tools, accessories and materials needed
Check and readjust, if necessary: steering wheel free travel	See section «Steering Control. Checking of Steering Wheel Free Travel»	Play meter
Front wheel toe-in	See section «Steering Control. Adjustment of Front Wheel Toe-in»	Measurement rule L 2000 mm, wrench 17×19, alligator wrench
Remove and wash steering pump filter	Oil leakage through filter seal is not permissible	Wrench for bleeding hydraulic brakes, screwdriver, oil vessel, washing bath
Electrical Equipment		
Check insulation of electric wires and their fastening	Damaged insulation and loose fastening of wires is not permissible	Flat pliers, screwdriver, insulating tape
Check storage battery charging degree. Proceed as described in section «Electrical Equipment» (at least once in three months)	If the storage battery is discharged by 50% in summer or by 25% in winter, recharge it fully at charging station	Densitometer, vessel with distilled water, cleaning rag
Check starter to engine fastening	Loose fastening is not permissible	Wrench 22×21
Check fastening and cleanness of wire shoes on starter terminals	Loose fastening and soiling of connections is not allowed	Wrenches 20×12, 17×19
Test and readjust headlamps (see section «Electrical Equipment. Lighting and Signalling Systems»)	Headlamps on unloaded truck placed on flat ground	Screwdriver, screen specially marked
Cab, hed		
Inspect and if need be, tighten fasteners on the cab, hed, coupling	Untightness is not allowed	Wrenches 17×19, 22×24, ring wrench 17×19
Lubrication		
Check and replenish oil to normal level in: gearbox case	Oil level in the gearbox should reach upper mark on the gauge	Wrenches 17×19, 22×24, 27×30, model 130M oil filling tank, cleaning cloth
distributor box case, drive axle cases, rear suspension balance levers, steering gear case	In the cases oil level should be up to filler edge. Leaks of oil through plugs are not allowed	
Lubricate in accordance with «Truck Lubrication Chart»:		
king pin upper bearings	Pack lubricant through lubricator, in volume given in Lubrication Chart	Lever-plunger gun, cleaning cloth
clutch release sleeve bearing	Pack through grease gun, rotating the gun lever in not more than three strokes	Ditto
clutch release fork shaft bushes	Ditto	»
steering propeller shaft connecting splines	Pack through grease gun until fresh grease is squeezed out	»
water pump bearings	Ditto	»
connecting splines of propeller shafts: intermediate shaft and middle axle drive torque rod hinges	»	»
	Use grease fill not exceed clearance deformation of the packing ring. In case of considerable deformation of packing ring, appearance of fresh lubricant is not obligatory	»
hinge pins of tow-and-hitch arrangement holster (for holster trucks)	Lubricate through lubricator, until fresh lubricant oozes	Lever-plunger gun, cleaning cloth
upper plane of holster	Apply lubricant uniformly	Shovel, wattle

Every other M-2 carry out additionally the following operations

Power Transmission		
Check and adjust, if need be, distribution box primary and lay shafts tapered bearings (see section «Power Transmission. Distribution Box»)	Axial displacement: for the primary shaft is 0.15–0.20 mm, for the layshaft, 0.08–0.13 mm	Wrenches 8×10, 12×13, 7×10, 22×24, combination wrenches 14×14, box wrenches 27×30, 41×46, pliers, screwdriver, tore iron, beam crane, pointer indicator, indicator fixture, drifting, flange puller 3759-3918050, cleaning cloth
Running gear		
Inspect the frame	Untightness of riveted connections, cracks in side members and cross members are not allowed	Portable lamp holder
If a trailer is hitched, check and eliminate axial play of the towing hook (see section «Running Gear. Frame»)	Allowance for axial play of the towing hook is not more than 0.5 mm	Hydraulic brake bleeding wrench, box wrench 55, tyre iron with jack bonny bar
Check and tighten, if need be, fasteners of the towing arrangement case and cross member	Untightness is not allowed	Wrenches 17×19, 22×24

Description	Technical requirements	Instruments, tools, accessories and materials needed
Check for any axial displacement of balancer, adjust if need be (see section «Track Suspension»)	Axial displacement of balancer is not allowed	Combination wrench 14×14, wrenches 12×13, 17×19, drift pin, hammer
Brake systems		
Check switches BK-303 of service brake light alarm (see section «Air-Hydraulic Drive of Service Brake System»)	Switch should be operable	Flat pliers, screwdriver, ring wrench 17×19, pilot lamp on instrument board
Check brake pedal for free travel	Pedal free travel should be 20—30 mm	Flat pliers, combination wrench 14×14, wrench 17×19, rule
Check output pressure on both sections of brake valve, operation of single and dual protective valves, pressure on coupling heads, remedy faults, if need be	See section «Air-Hydraulic Drive of Service Brake System. Maintenance of Hydraulic Drives»	Reservoir pressure gauges, wrenches 9×11, 10×12, 12×13, 17×19, combination wrench 14×14
Lubrication		
Change lubricant in:		
balancer suspension bars (see Lubrication Chart)	Fill oil up to filler hole level in hood. No oil leakage through hood seal and plug is permissible	Hydraulic brake bleeding wrench, wrench 27×19, oil collecting vessel (model 133M), oil dispenser tank, cleaning cloth
steering knuckle holes of front drive axle (see sections «Transmission» and Lubrication Chart)	Fill oil up to filler hole edge	Wrenches 17×19, 19×13, 24×27, socket wrenches 140, 18×22, tyre iron with jack handle, bar, screwdriver, hammer, TAPO dolly to remove wheels, crankshaft turning bar
In ventilation collars (see section «Special Components and Lubrication Chart»)	Air inlet hole should be free of lubricant	Hydraulic brake bleeding wrench, wrenches 17×19, 22×24, screwdriver, hammer, cleaning cloth
Remove wheel hubs, remove aged lubricant. Wash, lubricate and adjust hub bearings when reassembling (see section «Power Transmission. Hub Bearing Adjustment» Lubrication Chart)	Pack grease in bearings evenly, fully in chamber. After a short run and if bearings are adjusted correctly, the hub should be cold or slightly heated	Box wrench 140, tyre iron with jack handle, bar, screwdriver, jack, TAPO dolly to remove wheels, vessel for lubricant, hammer, wrench 22×24, cleaning cloth
Remove service brake shoes, clean and lubricate shafts and brakes	Shoes should revolve freely on shafts	Screwdriver, hammer, flat-pliers, tyre iron, wiping cloth
Remove and disassemble service brake wheel cylinders, wash parts, replace damaged and worn parts. In assembling, lubricate parts with brake fluid	Wash parts in alcohol or in brake fluid	Washing bath
Disassemble and lubricate connecting splines of front and rear axle drive propeller shafts (see Lubrication Chart)	Apply lubricant in thin layer on full surface of splines. When reassembling, check that pointers on tube shaft and sliding fork lie one against the other	Wrenches 17×19, 22×24, vessel for lubricant, cleaning cloth
Lubricate steering rod and hopster joints (see Lubrication Chart)	End the operation when the tip protective coupling starts to expand. The joints are light	Lever-plunger gun, cleaning cloth
Lubricate parking brake expansion cam shaft (see Lubrication Chart)	At loosing the parking brake level shoes should part away without seizure and return to initial position by the force of springs	Drop oiler
Every Third M-2 do additionally:		
Running gear		
When operating the trailer, inspect thread on hook and nut of towing device. In case of faulty thread, replace hook and nut with new ones	Deformed thread is not permissible	Wrenches 12×14, 22×24, socket wrench 55, ring wrench 24×27, tyre iron
Lubrication		
Change lubricant*:		
in distributor box case (see section «Transmission. Distributor Box and Lubrication Chart»)	Fill oil up to check hole level in box rear wall. No oil leakage through plugs is permissible	Wrenches 17×19, 27×30, oil collecting vessel, model 133M, oil dispenser tank, cleaning cloth
in drive axle reducers (see Lubrication Chart)	Ditto	Wrenches 22×24, 24×27, oil collecting vessel, model 133M, oil dispenser tank, cleaning cloth
Lubricate intermediate shaft of brake valve and clutch drive (see Lubrication Chart)	Lubricate through grease gun till fresh grease oozes	Lever-plunger gun, cleaning cloth

* Mixing substitute oils TC-10, Tsn-15B, change oil at each second M-2

Procedure	Technical requirements	Equipment, tools, accessories and materials needed
At each fourth M-2 additionally do the following:		
Service brake system		
Remove and disassemble air boosters with master cylinders, wash parts and lubricate before assembling. Replace faulty collars (see Lubrication Chart)	Wash booster parts in kerosene, master cylinder parts in alcohol or brake fluid	Wrenches 12×13, 17×19, 22×24, combination wrench 11×14, flat pliers, screwdriver, felt cloth
Change brake fluid (see Lubrication Chart)	After bleeding, add fluid to the required level	Bleeding wrench, pipe, vessel, cleaning cloth
At each sixth M-2		
Transmission		
Adjust steering knuckle pivot bearings (see section «Drive Axles»)	Thickness of shims removed from under lever and cover should be equal by 0.15 (0.05 - 0.1) mm	Ring wrench 21×27, pers. lever iron with lever for
Adjust drive axle final drives	For technical requirements and adjustment sequence refer to section «Final Drives»	Device for removal and installation of reduction gears, dyniometer, indicator, 12×13, 17×19, 22×24, 24×27 wrenches, ring wrenches 17×19, 24×27, flat pliers, screwdriver, hammer, tyre iron, semi-axle remover, cleaning cloth
Electrical Equipment		
Remove generator from engine and service it	See section «Generator», «Electrical Equipment. Generator»	Testing stand, for electrical equipment, wrenches 12×13, 17×19, ring wrench 17×19, combination wrench 14×14, screwdriver, caliper, emery cloth C-100
Check fastening of battery container brackets on frame	Loose fastening is not permissible	Wrenches 17×19, 22×24
Lubrication		
Change lubricant in gearbox case (see Section «Transmission. Gearbox» and Lubrication Chart) *	Oil level should come to upper mark on dipstick. No oil leakage through plugs is tolerated	Wrenches 17×19, 22×24, vessel for waste oil, model 139M oil dispenser tank, cleaning cloth
Seasonal Maintenance (SM)		
Engine		
Remove injectors from engine and service them (see section «Engine Fuel System»)	Injectors should be adjusted	Wrenches 12×13, 17×19, 22×24, combination wrench 14×14, injector remover, device KП-1509, wrench 591, motor oil, steel wire, tetraethylated gasoline, cleaning cloth
Check and, if necessary, adjust the fuel injection advance angle (see section «Engine. Fuel System»)	Marks on the fuel pump case and on the automatically-operated coupling should align	Wrench 17×19, combination wrench 14×14, wrench 12×13, cranking bar
Lubrication		
Check oil level in winch reduction gear box and top it up, if need be (see Lubrication Chart)	Fill oil to check hole edge. Oil leakage through plugs is inadmissible	Wrench 24×27, model 139M oil dispenser tank, cleaning cloth
Additionally once a year, in autumn		
Engine		
Change coolant (see section «Engine. Cooling System» and Lubrication Chart)	Coolant leakage is inadmissible	Vessel for coolant, cleaning cloth
Prepare starting preheater for winter operation (see section «Engine. Cold Engine. Starting System»)	Coolant and fuel leakage is inadmissible. Preheater operation with open flame at the outlet is inadmissible	Screwdriver, wrenches 22×13, 27×18, combination wrench 14×11, both for washing oil and fuel, cleaning cloth
Electrical Equipment		
Check voltage on the truck	See section «Electrical Equipment. Voltage Regulator»	Voltmeter of accuracy class of not lower than 1.0 with scale 0 - 30 V
Remove starter and carry out maintenance works (see Lubrication Chart)	For technical requirements and operation sequence refer to Section «Starter»	Wrenches 12×13, 17×19, box wrench 10, combination screwdriver No. 2, hammer, starter check tester, caliper, sand paper with C-100 grain, testing stand for checking electrical equipment, ring wrench 22×24

* When using substitutes of TCn-10, TAm 15B oils, change oil at each second M-2.

Description	Technical requirements	Implements, fixtures, tools and materials needed
Special equipment		
Disconnect and blow through with compressed air pipes and hoses of the auxiliary system Remove and disassemble the auxiliary power take-off. Wash and lubricate parts	Check that pipes and hoses are not clogged Wash parts in kerosene or diesel fuel. Lubricate with transmission oil	Wrenches 32×13, 17×19, 22×24, combination wrench 14×14, box wrench 30, air hose from compressor Wrenches 12×13, 17×19, combination wrench 14×14, ring wrench 17×19, hydraulic brake bleeding wrench, box wrench 27×38 for wheel nuts, tyre iron, flat pliers, hammer, screwdriver, bath for washing of units, cleaning cloth
Frame, cab, bed		
Inspect paint coating, patch it need be Weld cracks found and touch them with paint	Rust and paint spalling, cracks are not allowed	Portable lamp
Lubrication		
Disassemble hinge joints in fuel feed control drive	Apply a thin layer of lubricant to rubbing surfaces of parts (see Lubrication Chart)	Wrench 12×13, flat pliers, screwdriver
Disassemble air cylinders in control of clutch and auxiliary brake system. Lubricate pistons and inner surface of cylinders (see Lubrication Chart) Lubricate winch drum shaft bearing (see Lubrication Chart) Disassemble and lubricate winch drive (jeweller shaft connecting splines (see Lubrication Chart)	Apply lubricant in a thin layer uniformly over entire surface of cylinders and pistons Pack grease until fresh lubricant is squeezed out Apply lubricant evenly in thin layer on full surface of splines. When reassembling, align marks on sliding forks and splined ends of intermediate shaft	Screwdriver drift-pin, flat pliers, combination wrench 14×14, wrench 27×19 Lever plunger gun, cleaning cloth Wrenches 17×19, ring wrench 22×24, cleaning cloth
Change oil in fuel injection advance coupling Change oil in winch reduction gear every fall season maintenance (see Lubrication Chart)	Fill oil through one of holes available (which is found on top) until oil appears from another hole Fill oil to check hole level. Leaks of oil through the plug are not allowed	Screwdriver, funnel, vessel for oil Wrench 24×27, vessel for waste oil, model 133M oil dispenser fork, cleaning cloth

LUBRICATION

General

The truck Lubrication Chart gives information on fuels and oils, service fluids and the schedule of change and replenishment of these materials depending on the total service, climate conditions and peculiar features of operation of the trucks. Particular suggestions and methods of carrying out operations for lubricating separate units and parts are described in corresponding sections of this Manual.

Lubricate terminal connections according to Lubrication Chart.

Operations for lubrication should be carried out during maintenance work according to the schedule.

Fuels, lubricants and special fluids should not be used if not described in this document.

Norms of collecting waste fuels and oils and special fluids are presented in Appendices 8 and 9.

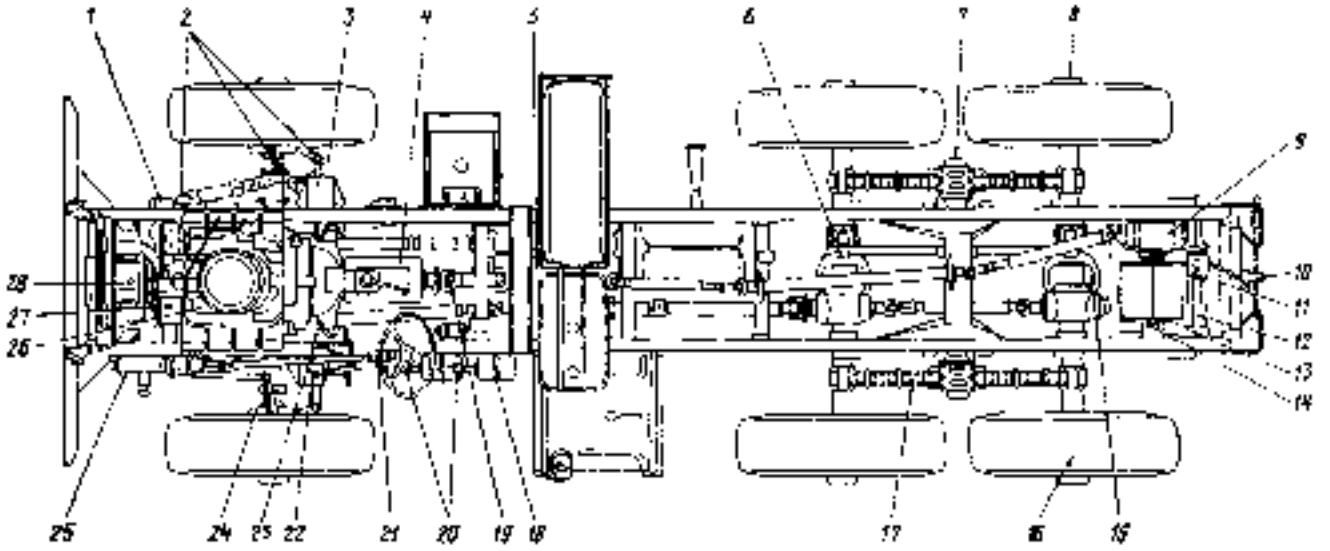

Fig. 150. Truck Lubrication Chart

LUBRICATION CHART

Item on Fig. 150	Name of lubrication point	Qty of lub points	Main grades, season application	Supplement. season application	Foreign grades	POL qty: Initial (L kg)*	POL qty: Total per truck (L kg)*	Schedule POL change (replenishment): Main grade	Schedule POL change (replenishment): Substitute	Hours for lubrication (filling or change)
1	2	3	4	5	6	7	8	9	10	11
—	Engine fuel system		Summer diesel fuel 2 (40) (at temperatures above 0 °C). Winter diesel fuel 3 (minus 35) (at temperatures of minus 20 °C and above); diesel fuel 3 (minus 45) (at temperatures of minus 30 °C and above); diesel fuel "Ar" A (at temperatures of minus 50 °C and above)		DF-2 VV-F-800, DF-1 VV-F-800, DTF-2102-B, DF-A VV-F-800					

1	2	3	4	5	6	7	8	9	10	11
26	Engine crankcase	1	Summer oil M-10G[illegible] Winter oil M-8[illegible]	All season: oil M-6[illegible]/10B	Shell Rotella TX 30, Mobil Delvac 1290, BP Vanellus M30, Shell Rotella TX 20W, Mobil Delvac 1230, BP Vanellus Multi W, Shell Rotella TX 10W-30, Vanellus W10W/30, Vanellus W20W/30	24.5	24.5	DM	SM	Check oil level and replenish, if need be; fill level between [illegible] and [illegible] on dipstick
								After initial 1000 km of run. Then every 10 000 km	After initial 1000 km of run. Then every 5 years or as need be	Change oil
—	Shaft injection advance coupling	1				0.3	0.3	Most initial 1000 km of run. Then every 5 years (in rotation)	Most initial 1000 km of run. Then every 5 years (in rotation)	Check oil level and replenish, if need be. Change oil
—	Oil pans in starter covers	2	Oils used for engine	Oils used for engine	Shell Rotella TX 30, Mobil Delvac 1230, BP Vanellus M30, Shell Rotella TX 20W, Mobil Delvac 1220, BP Vanellus M20W, Shell Rotella TX 10W-30, Vanellus M10W/30, Vanellus M20W/30	7—10 drops	14—20 drops	SM (once a year, in autumn)	SM (once a year, in autumn)	Add motor oil
—	Oil pan of starter intermediate bearing	1				7—10 drops	7—10 drops			
—	Parking brake expansion cam shaft	1						Every second MW-2	Every second MW-2	Clean the shaft, lever, adjusting lever and mod. guard. Lubricate

1	2	3	4	5	6	7	8	9	10	11
4	Gearbox [illegible] 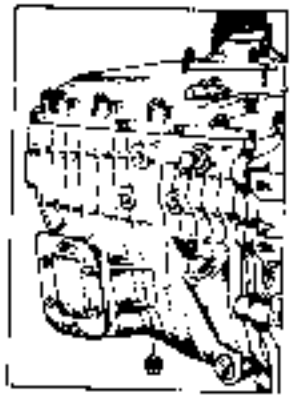	1	Oil TCn-15K (at a temperature not below minus 30 °C). All-season oil TAS-12pk	Oil TCn-10 (at a temperature not below minus 45 °C), at a temperature below minus 30 °C it is allowed to dissolve oil TCn-15K with 10–15% of diesel arctic or winter grade fuel	BP Gear oil EP SAE-90 Denol Gear EP 90, Esso Gear oil GP 90, Mobilube GX90, Shell Spirax 90 EP	8.5	8.5	After initial 3000 km	After initial 1000 km	Change oil [illegible] Oil level should come to lower mark on dipstick
								MW-2	MW-2	Check oil level and add if need be. Fill upper mark on dipstick
								Each sixth MW-2, but at least once in three years	Every third MW-2	Change oil. Oil level should come to upper mark on dipstick
5	Distributor box [illegible] 	1				3.5	3.5	After initial 1000 km	After initial 3000 km	Change oil [illegible]
								MW-2	MW-2	Check oil level and, if necessary, add oil to check filler hole
								Every third MW-2	Every third MW-2	Change oil. Fill oil to check filler hole edge

1	2	3	4	5	6	7	8	9	10	11
25	Steering gear housing *) 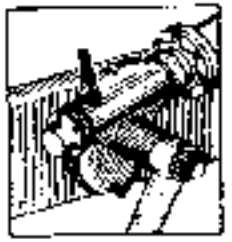	1	Oil TCn-15K (at a temperature not below minus 30 °C) All season oil TM5-12pk	Oil TCn-10 (at a temperature not below minus 45 °C), at a temperature below minus 30 °C it is allowed to dissolve oil TCn-15K with 10—15 % of diesel arctic or winter grade fuel	BP Gear oil EP SAT-90, Deusol Gear EP 90, Esso Gear oil GP 90, Mobilube GX90, Shell Spirax 90 EP	1.48	1.48	After initial 1000 km	After initial 1000 km	Change oil *)
								MW-2 At disassembly	MW-2 At disassembly	Check oil level and add oil, if need be Add oil till lower edge of filler hole Change oil
—	Auxiliary power take-off	1				0.01	0.01	SM (once a year)	SM (once a year)	At overhaul lubricate working surfaces of parts
26	Drive axle reduction gears *) 	3	Oil TCn-15K (at a temperature not below minus 30 °C) Oil TM5-12pk (at a temperature below minus 30 °C)	Oil TAn-15B (at a temperature not below minus 25 °C) Oil TCn-10 (at a temperature not below minus 45 °C) At a temperature below minus 25 °C it is allowed to dissolve oil TAn-15B, TCn-15k in 10—15 % of diesel arctic or winter fuel		5.0	13.0	After initial 1000 km	After initial 1000 km	Change oil *)
								MW-2	MW-2	Fill oil till check-filler hole edge on axle casing. If final drive was demounted, first pour 1 ltr of oil through the hole intended for pipe union of sealing system on final drive casing, the remaining oil should be poured through check-filler hole up to its edge. Check oil level, add, if required
								Every third MW-2	Every second MW-2	Change oil

1	2	3	4	5	6	7	8	9	10	11
7	Rear balancing suspension hubs *1	2	Oil TCn-15K (at a temperature not below minus 30 °C) Oil TAs-15pk (at a temperature below minus 30 °C)	Oil TAn-15B (at a temperature not below minus 25 °C) Oil TCn-10 (at a temperature not below minus 45 °C) At a temperature below minus 25 °C it is allowed to dissolve oil TAn-15B, TCn-15K in 10—15 % of diesel arctic or winter fuel	BR Gear oil EP SAE 90, Deusol Gear EP 90, Esso Gear oil GP 90 Mobilube GX 90, Shell Spirax 90 EP	0.75	1.5	MW-2	MW-2	Check oil level and add, if required up to the level of filler hole in the cap
								Every second MW-2	Every second MW-2	Change oil, having removed first the balance cap
9	Winch reduction gear	1	Oil TCnsz	Oils used for engine	Deusol Gear EP 140, Mobilube GX 140, Gear oil GP 140, Gear oil 140 EP, Spirax EP 140	7.5	7.5	SM	SM	Check oil level and add, if need be
								Every fourth SM or once in two years	Every fourth SM or once in two years	Change oil Fill oil till check hole edge on reduction gear case cover

1	2	3	4	5	6	7	8	9	10	11
-	Steering control hydraulic system with spare wheel hoist	1	Oil "P"	Spindle oil AV	Shell Tellus 22, BP-Energol HLP 22, Mobil-DTE 13	4.5	4.5	After initial 1000 km	After initial 1000 km	Check oil level and add, if need be
								MW-1	MW-1	Add oil till upper mark of measuring rule. Oil "P" should be changed during repair
									Every third MW-2, but at least once a year	Change oil
24	Steering knuckle body of front drive axle	2	Mixture of lubricant Литол 24 with oils for reduction gears of drive axles (50 % each)	Mixture of cardan lubricant AM with oils for reduction gears of drive axles (50 % each)	—	3.0	6.0	MW-1	MW-1	Check lubricant level in unit and add lubricant, if need be
								Every second MW-2	Every second MW-2	Change lubricant. Fill lubricant up to check-filler hole edge
	Centre crosses (needle bearings) of propeller shafts. — winch drive	4	Lubricant Литол 24	Lubricant 158	Retinax A, Alvania R3, Alvania RA,	0.024	0.096	—	—	Change oil during disassembly
19	— drive of front, middle and rear axles and intermediate shaft	8			Mobilux 3, Beacon 3, Energrease L2	0.036	0.29			
	— steering control	2				0.006	0.012			

1	2	3	4	5	6	7	8	9	10	11
16	Tyre inflation collars ** 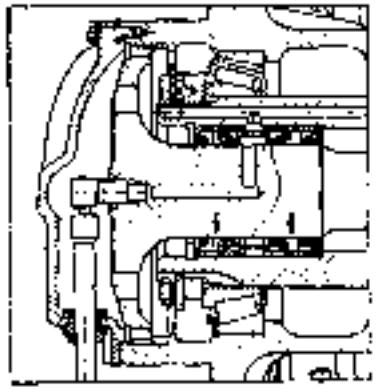	6	Grease LITHATUM-201	Lubricant Sernol	Mobilgrease BRB Zero, Aeroshell Grease 6, Regcon 325	0.05	0.3	Every second MW-2	Every second MW-2	Lubricate outer working surfaces. Lubricate with a film layer a working surface of semi-axle
18	Air boosters of service brakes (rods, spacer collars, cylinders and piston collars) 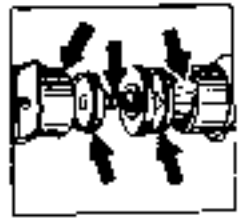	2				0.03	0.06	Every fourth MW-2	Every fourth MW-2	Change lubricant. Lubricate piston collars, working surface of cylinders, rod and spacer gland
—	Auxiliary brake system and clutch control drive air cylinders 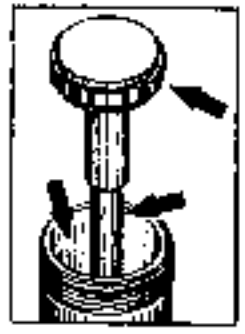	4				0.007	0.028	SM (once a year)	SM (once a year)	Change lubricant. Lubricate piston collar, rod, working surface of cylinder

1	2	3	4	5	6	7	8	9	10	11
—	Starter drive shaft	1	Grease ЦИАТИМ 201	Lubricant Литол	Mobilgrease BP6 Zero Aeroshell Grease G, Beacon 325	0.003	0.005	Once a year in autumn	Once a year, in autumn	Lubricate splines of shaft with a thin layer
—	Terminals of: — service brake failure pickup	2								Lubricate with a thin layer after connection of terminals, having first cleaned them
	— indicator pickup of minimum operating pressure in pneumatic system	3								Lubricate with a thin layer before connection of plugs, having first cleaned them
	— brake signal switch	4	Lubricant ВНИИНП 207-510	Lubricant Литол-24		0.008		SM (once a year, in autumn)	SM (once a year, in autumn)	Lubricate with a thin layer before connection of terminals, having first cleaned them
	Terminals and fastening studs: — rear lights	5								Lubricate with a thin layer the plugs of rear lights, tail lamp, number plate light before connection, having first cleaned fastening studs together with nuts after fastening
	— tail lamp	6								
	— number plate light	3								

1	2	3	4	5	6	7	8	9	10	11
8	Wheel hubs	6	Lubricant Zimol-24	Lubricant Zimol	Belinax A, Alvania R3, Alvania R4, Mobilux 3, Beacon 3, Energrease L2	0.85	0.1	Every second MW 2	Every second MW 2	Change lubricant. Lubricate working surface of collar and pack in space between bearings and collar having first removed aged lubricant. Wash outer bearing. Lubricate bearing until complete filling of the space between rollers, pack grease in hubs between bearings
27	Water pump bearing	1				0.018	0.018	MW 2	MW 2	Lubricate through grease cup until fresh grease appears from check hole
—	Gearbox main drive shaft front bearing	1		Lubricant Zima		0.015	0.015	—		Lubricate when removing gearbox (fill space in crankshaft shank)
—	Ground switch terminals and plugs	4				0.0005	0.002	SM (once a year, in autumn)	SM (once a year, in autumn)	Lubricate with a thin layer the plugs before connection, the terminals, after connection, having first cleaned

1	2	3	4	5	6	7	8	9	10	11
—	Clutch release sleeve bearing	1	Lubricant Литол-24	Lubricant 158	Relinax A, Alvania R3, Alvania RA, Mobilux 3, Beacon 3, Energrease L2	0.015	0.015	After initial 1000 km After next 4000 km MW-2	After initial 4000 km After initial 4000 km MW-2	Lubricate through grease cups having made maximum three attempts by gun
—	Clutch release fork shaft bushings	2		Solid oil ЖК and cup grease ЖС, Solid oil С and cup grease С		0.0075	0.015	After initial 1000 km After initial 4000 km MW-2	After initial 4000 km After initial 4000 km MW-2	Lubricate through grease cups having done maximum three attempts by gun
1	Front spring pins	2				0.03	0.06	MW-1	MW-1	Lubricate through grease cup until fresh grease oozes from gaps

1	2	3	4	5	6	7	8	9	10	11
20	Towing arrangement brackets 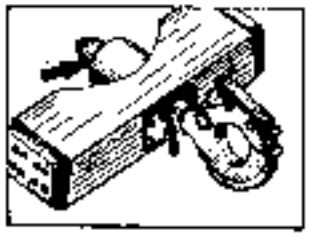	2	Lubricant Литол-24	Solid oil Ж and cup grease Ж, solid oil С and cup grease С	Retinax A, Alvania R3, Alvania RA, Mobilux 3, Beacon 3, Energrease L2	0.025	0.05	MW-1	MW-1	Lubricate through grease cup when operating with trailer
27	Steering control shaft bearings 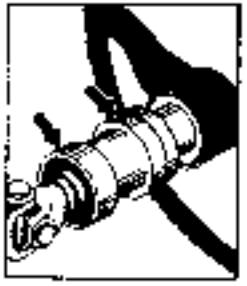	1				0.03	0.10	-		Lubricate at disassembly
2	Booster and steering rods joints 	6				0.037	0.22	Every second MW-2	Every second MW-2	Lubricate through grease cup. Pump lubricant before deformation of protective coupling of cup. Pump till fresh lubricant appears

1	2	3	4	5	6	7	8	9	10	11
6	Torque rod joints	12	Lubricant Jiaron-2k	Solid oil ЖК and cup grease ЖК, solid oil С and cup grease С	Retinax A, Alvania R3, Alvania RA, Mobilux 3, Beacon 3, Energrease L2	0.0375	0.15	MW-2	MW 2	Lubricate through grease cups until fresh lubricant appears from gap between head and packing ring or before beginning of deformation of packing ring
	Fuel-feed control drive joints	6				0.0033	0.02	SM (once a year)	SM (once a year)	Lubricate working surfaces at disassembly
24	Pivot upper bearings	2				0.1	0.2	MW 2	MW-2	Lubricate through grease cup, having made maximum 90 attempts by gun
	Propeller shaft splined connections — intermediate shaft and rear axle drive	5				0.02	0.04	MW 2	MW 2	Lubricate through grease cup until fresh grease oozes

1	2	3	4	5	6	7	8	9	10	11
	– rear and front axles drive	2	Lubricant Turan-24	Solid oil ЖК and cup grease ЖК, solid oil С and cup grease С	Retinax A, Alvania R2, Alvania RA, Mobilux 2, Beacon 3, Energrease L2	0.18	0.36	Every second MW-2	Every second MW-2	Change lubr. can!
	– winch drive	2				0.02	0.04	SM (once a year)	SM (once a year)	Lubricate through grease cup until fresh grease oozes
	– steering control	1				0.01	0.01	MW-2	MW-2	
14	Winch drum shaft plain bearing 	1				0.1	0.1	SM (once a year)	SM (once a year)	Lubricate through grease cup until fresh grease oozes
13	Winch rope guide bearings 	2				0.035	0.07	—	—	Lubricate at disassembly
[illegible]	Bolster joints pins** 	2				0.02	0.04	MW-2	MW-2	Lubricate until fresh grease oozes from gaps

1	2	3	4	5	6	7	8	9	10	11
—	Seat upper plane [43]	1	Lubricant Литол-24	Solid oil Ж and cup grease Ж, solid oil С and cup grease С	Retinax A, Alvania R3, Alvania RA, Mobilux 3, Beacon 3, Energrease L2	0.2	0.2	MW-2	MW-2	Lubricate with an even layer the base plate
12	Working surfaces of winch rope guide lead screw and shafts guide 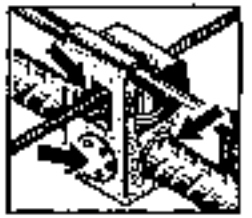	3	Graphite grease УСтА	Solid oil Ж, solid oil С or lubricant Литол-24	Shell Barbalia 2, Mobilgrease Graphited № 3, Castrol Spheeral LG2	0.33	0.33	--	--	Lubricate after each operation of winch. If winch was not used, lubricate once a year at SM
11	Roller bushes and holder body cavity of winch rope guide rollers	3				0.033	0.1			Lubricate at disassembly
—	Winch rope-guide chain transmission 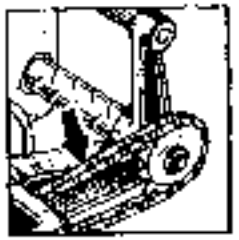	1				0.1	0.1	—	—	Lubricate at disassembly
17	Spring leaves 	4				0.325	1.30	—	—	Lubricate after disassembly contact surface of spring leaf, having first removed corrosion

1	2	3	4	5	6	7	8	9	10	11
—	Brake valve drive and clutch control [illegible] bracket shaft 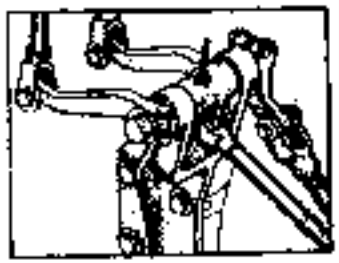	1	Graphite grease УСсА	Solid oil Ж, solid oil С or lubricant Литол-24	Shell Barbatia 2, Mobilgrease Graphited № 2, Castrol Spheerol LG2	0.03	0.03	Every third МУ-2	Every third МУ-2	Lubricate through grease cup until fresh grease appears
22, 25	Clutch and brake pedal shaft 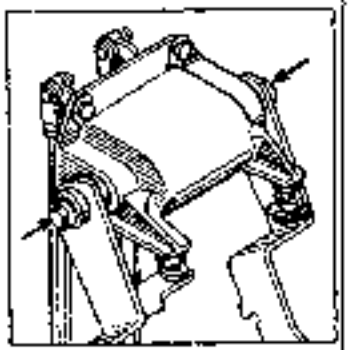	1				0.015	0.015	—		Lubricate at disassembly bushes and shafts
—	Service brake shoe pins 	12				0.005	0.06	Every second МУ-2	Every second МУ-2	Lubricate shoe bushes and pins

1	2	3	4	5	6	7	8	9	10	11
—	Parking brake drive lever pin in cab	2	Graphite grease VCeA	Solid oil Ж, solid oil C or lubricant Литол-24	Shell Barbatia 2, Mobilgrease Graphited № 3, Castrol Spheerol LG2	0.0075	0.015	—	—	Lubricate at disassembly bushes and pins
—	Parking brake drive intermediate lever pins on cross-piece	2				0.0075	0.015		—	
—	Parking brake drive two-arm lever axis on distributor box	1				0.005	0.005		—	Lubricate at disassembly, having first cleaned them
-	Parking brake shoes pin expans on cam	2				0.005	0.01	—	—	

1	2	3	4	5	6	7	8	9	10	11
27	Hydraulic system of brakes	2	Brake fluid ЕТЖ 22М. At a temperature below minus 40 °C dissolve brake fluid with 18—20 % of ethyl alcohol (by weight)**	Brake fluid "Neva" or "Tom". At a temperature below minus 40 °C dissolve brake fluids with 18—20 % of ethyl alcohol (by weight)**	Pentosin Super Fluid 1 1703-R, Castrol Girling, Mobil Hydraulic Brake Fluid Shell Donax B	0.65	1.7	LIM. Every fourth MW-2, but at least once every half and a year	6M. Every fourth MW-2, but at least once every two years	Check fluid level and if need be add in tanks 15—20 mm below upper edge of filler neck. Change fluid
—	Service brakes main cylinders	2	Brake fluid ЕТЖ 22М	Brake fluid "Neva", "Tom"	Pentosin Super Fluid 1 1703-R, Castrol Girling, Brake Fluid, Mobil Hydraulic Shell Donax B	0.150	0.300	Every fourth MW-2	Every fourth MW-2	Wash working surfaces of wheel and main cylinders parts with brake fluid
—	Service brakes wheel cylinders	6				0.05	0.300	Every second MW-2	Every second MW-2	
			Grease ЦТ-1 (at Manufacturing Works only)			0.02	0.120	—	—	Lubricate working surfaces of parts at reassembly
3	Telescopic-type shock absorbers	2	Shock-absorber fluid АЖ-12Т	Spindle oil АУ	Donax A	0.85	1.7	-	—	Change fluid after disassembly, having washed shock absorber parts in kerosene and dried them up

1	2	3	4	5	6	7	8	9	10	11
28	Cooling system with preheater	1	Coolant OЖ-40 "Lena", OЖ-65 "Lena"	Coolant grade 40, 65, TOCOЛ-A40M, TOCOЛ-A65M	AGIP Antifreeze	31.0	31.0	DM SM (once in two years)	DM SM (once a year)	Check coolant level and, if need be, bring it up to normal: 15—25 mm above the end faces of radiator cooling pipes at above zero temperatures up to 40 °C. Change fluid
				Water may be used		34.0	34.0	DM	DM	Check water level and, if need be, bring it up to normal: 20—50 mm above the end faces of radiator cooling pipes

[1] In columns 7, 8 the oils and working fluids are given in litres, plastic greases in kilograms.
[2] Column 7 gives nominal values of oils and working fluids to be filled in, therefore, after priming it is a good practice to check the level of oil (fluid) and, if need be, to bring the level to the norm, as required in section "Maintenance"
[3] Oil used during first 1000 km may be reused after removing mechanical impurities by filtering or settling.
[4] For Ural-4320-02, Ural-4420-02 trucks.
[5] For Ural-4420-02, Ural-44202-02 trucks.
[6] Replace diluted brake fluid by fresh (undiluted) fluid when performing spring SM.

STORAGE

GENERAL

Storaging is maintaining technically in fact, fully completed and specially prepared trucks in the condition which ensures their good preservation and preparation in a preset time.

A new truck, if not put into operation, may be stored without preservation treatment during three months from the date of shipment from the Manufacturer. In this case after placing the truck for storage, coat with a thin layer of lubricant Литол-24 or solid oil the non-painted surfaces of the front axle ball supports; ensure maintenance of storage batteries and tyres in compliance with the pointers of the respective Service Manuals.

If the truck is to be stored for more than the preset period, treat the truck for preservation and storage to suit the requirements of the present section.

Store the truck in a clean dry well-ventilated dim-out storehouses or under a shed. In case of storage in the open air on the platform, protect the tyres, steering wheel, rubber and plastic parts from direct sun rays, cover the engine with the systems with water-proof packing paper or painted film, tarpaulin, etc.

The technology of preparation for storage the trucks which belong to the War Ministry, their storaging and removal from storage should be adhered to in accordance with the respective Manuals «Truck Technical Equipment and Stores in Army and Navy».

PREPARATION FOR STORAGE

Perform daily maintenance and scheduled MW-1, MW-2 or SM depending on the truck run or season.

Prime to the norm with power-preservative or power oils the following: engine crankcase, gearbox, distributor box, axles reduction gears, steering control and rear suspension balancer cavities; prime the winch case with power oil.

If antifreeze to GOST 159—52 or water is used in the cooling system, introduce in the system one of the compositions of anticorrosive additives described in Table 11.

Start the engine, warm it up and run the truck 500—1000 m at a speed not lower than 60 km/h (or at the storage site crank the units with the raised wheels with the same speed) to apply oil film on the surface of engine parts and transmission and steering control units.

With the engine running engage for 3—5 min the auxiliary power take-off drive, having made sure first that the winch engagement lever is in the disengaged position.

If the truck units are primed with power-preservative oil, treat the engine cylinders with power-preservative motor oil. Make preservation in such a sequence:

— remove injectors;

— pour 65—75 ml of power-preservative oil preheated to 60°C into the space above pistons through the holes for injectors;

— crank the crankshaft by two-three short-time switchings of the starter without fuel feed.

Do not tolerate getting into the cylinder of more than 75 ml of preservative oil.

If the fuel tanks are filled with preservative fuel mixture (see Table 11), add fuel after running the truck and drain the sediment from the fuel filters.

If the truck units are primed with the power-preservative oils and the fuel tanks are filled with standard diesel fuel, then in addition to the described above, preserve the fuel system in the sequence:

— disconnect the supply pipe on the fuel coarse filter or fuel priming pump, connect special fuel intake and submerge it into the vessel with filtered preservative fuel mixture;

— pump through using the hand-operated fuel priming pump the fuel system until pure mixture (without air bubbles) appears from the tip of the drain pipe on the fine filter, for this purpose slacken tightening of fuel supply line bolt;

— crank two-three turns the crankshaft, the governor lever should be in the position corresponding to the fuel feed;

— undo through 1½—2 turns the bolts fastening the drain pipes of the 1st and 6th cylinders injectors, pump through the drain pipe using the preservative fuel mixture until it appears without air bubbles from under the turned off bolts, after this turn in the bolts.

Slacken the belts of the fan and water pump drive.

Seal the outlet holes of the exhaust and air intake pipe ends, engine crankcase ventilation branch pipe, having lightly tied them or glued with the materials given in Table 11.

Close the wheel valves.

Drain water from windshield washer.

Switch off the storage battery switch.

Clean, wash, wipe dry and powder with talcum the cab floor mats, roll them up and place them on the seats.

When the truck is stored in the open on the ground, remove the bed canopy, windshield wipers and rear view mirrors, pack them and store in closed rooms. Before packing dry the canopy. Coat the rubber and technical parts with protective composition, according to Table 11 or wrap with packing material.

Close lightly the cab ventilation hatch, roll-down glasses, door no-draught vents and raise the radiator shutter.

Lubricate with a thin layer of lubricant according to Table 11:

— rear lights plug-and-socket connectors, licence plate light, rear lights, connection of air pressure pickups in reservoirs;

— connection of terminals of brake system faults sending units and light «стоп» (stop) switch;

— storage battery outlet pole terminals with wire lugs.

Lubricate with a thin layer of lubricant Литол-24 or solid oil the outer non-painted surfaces of the front axle ball supports, open surfaces of the distributor box rods and auxiliary power take-off.

Lubricate with the preservative grease the exposed sections of the threaded connections, the cab door outer handles, no-draught vent frames, windshield glass washer jet heads, lights rings, chain drive, lead screw; guide shafts, rope and winch

rope-guide rope rollers, threaded pair hook-nut of the towing arrangement.

Lubricate with the preservative grease the tyre irons, socket wrench head inner surfaces, holes for tommy bar, dipstick, removers, entrenching tools and pack the described articles with wax or other paper.

Lubricate with power-preservative oil (motor or transmission) the auxiliary brake hinge joints, tool box, storage batteries container, bed sides and boards, and tailgate, cab doors, hood, doors and hood locks.

If water was used in the cooling system, then after placing the truck for storage, drain water.

Unload the wheels and the truck suspension in the sequence described below abiding by the following pointers:

– for unloading the front axle wheels, install unloading support of 620 mm height under the flanges of ball support *18* (see Fig. 79) of the steering knuckles,

— for unloading the wheels of the intermediate and rear axles, place the unloading supports of 560 mm height under springs 6 (see Fig. 85) bearing brackets, in doing this first unload the wheels of the intermediate axle,

— for unloading the rear suspension place the unloading supports of 770 mm height under the cylindrical portion of the bracket of rear suspension balancer spring pin *14*;

— for unloading the front suspension, place the unloading supports of 220 mm height between the frame springs and side members.

In-Storage Maintenance of Truck

Check monthly the condition of protective coating and devices, that no leaks of fuel, oil and special liquids are evident. Eliminate troubles, if found.

Regularly remove the products of corrosion found out from the painted and non-painted surfaces, renew damaged paintwork, non-painted surfaces should be coated with preservative grease after removal of corrosion. Damaged paintwork should be worked with emery cloth with small grain or water-proof emery cloth, then wipe the surface with wastes wetted in non-ethylated gasoline or in a solvent, then dry up. In summer paint the surface with enamel of the same colour in two layers with an interval for 5—10 min, in winter fabricate the surface with a preservative grease.

If the units of the truck stored in the open air are primed with power oils, once a month by starting the engine on the storage site and by cranking the units (with the raised wheels) or by running the truck (see subsection «Preparation for Storage») check the serviceability of all the units, assemblies and systems, with obligatory five-or-seven-times depressing the brake pedal, by engaging of power take-off for 3—5 min (without switching-in of the winch drum lever).

On completing of work connected with the engine starting, slacken the belts again, seal the supply system and gas exhaust system, let air out from the reservoirs through the condensate drain cocks. Renew grease on the ball support surfaces.

On the trucks stored in non-heated premises or under a shed, check the above described serviceability of units, assemblies and systems once in three months.

On the truck stored in the open air or under a shed and the truck units primed with power-preservative oils, check once in six months the serviceability of service brake and clutch control, gearbox control drive, distributor box control, parking brake control by setting the corresponding levers in different positions. If control linkage is seized, find the cause of trouble and eliminate it.

The check over, set all the levers in the neutral position. Check radiator shutters and fuel feed control drive for serviceability. If need be, check servi

Preservative and Protective Materials *Table 17*

Application of material	Name and composition
For engine preservation	Power preservative oil M-10 [illegible] or mixture of oil M-6-10B TY 38 101.153—70 or M-8Dsk or M-10Dsk GOST 8581—79 with 10 % (by volume) of additive AKOP-1 GOST 15171—78
Preservative mixture of fuel	Mixture of diesel fuel GOST 305—82 with 2 % (by volume) of additive AKOP-1
Antirust additive for coolant	Mixture of 162 g sodium nitrite GOST 19906—74 and 162 g of potassium dichromate GOST 4220—75 and 162 g of trisodium phosphate GOST 201—76 or 270 g of borax GOST 8429—77, 27 g of benzotriazole TY 6-14-860—72 and 31 g of sodium nitrite
For preservation of transmission units and suspension balancers	Power-preservative oil TAD-12pc TY 38 101.846—86 or a mixture of transmission oil TCa-15K GOST 23652—79 and 10 % (by volume) of additive AKOP-1
For preservation of outer non-painted and painted surfaces and threaded sections	Gun grease GOST 19537—83
For preservation of plug connectors and terminal connections of electrical equipment	Petrolatum BT13-1 TY 38 101.180—76, lubricant Zimrol 24 or solid oil
For painting damaged metal surfaces in	
— khaki	Enamel MC-22 GOST 9754—76 or MC-152 GOST 16099—75
— black colour	Enamel MC-17 TY 6-10-1012—78
For painting wooden parts in khaki	Enamel MA-145 GOST 20760—78
For protection against light action of hoses, hoses driving belts and other rubber articles	Mixture of aluminium powder with light oil varnish or aluminium paste with white spirit in the ratio of 1:4 or 1:5 (by mass) Chalk-casein composition-mixture of chalk 75 % (by mass), casein glue 20 %, slaked lime 4.5 %, soda ash 0.25 %, phenol 0.25 %
Packing material for sealing and partial packing	Wax paper GOST 9569—79, capacitor paper GOST 1908—82 impregnated with paraffin, cover layer packing paper GOST 8828—75, packing bituminous and tar paper GOST 10354—82, rubberized cloth, etc

ceability of the truck by starting the engine with cranking the units as described above.

Perform maintenance of storage batteries and tyres during the truck storage in accordance with the pointers of respective Service Manuals.

Power-preservative oils should be prepared by thorough mixing of power oils with additive AKOP-1 at a temperature not above 110 °C.

Do not pour additive AKOP-1 directly into the cases of the units.

To introduce antirust additives into the engine cooling system, drain 4—5 ltr of coolant from the system, dissolve in this volume one of the variants of the above additive compositions and fill the concentrated solution into the cooling system, making use of a funnel with gauze. After this start and warm up the engine up to 80 to 90 °C.

Removal of Truck from Storage

Before operating the truck after storage:

— remove the truck from the supports and relieve the springs;

— unseal the supply system, gas exhaust and ventilation systems of the engine;

— remove protective grease from the outer surfaces using soft rags wetted in kerosene or methylated gasoline;

— tighten and adjust the belt tension of the fan and water pump drive;

— check oil level in transmission units, steering booster pump tank, rear suspension balancer caps, bring to the norm, if necessary;

— perform inspection and maintenance of the truck in the volume of daily maintenance, if some of the power-preservative or power oils and fluids filled in the units and systems do not suit the season of operation or if the application time has expired, then refill the units and the system with suitable oils and fluids;

— prior to starting the engine, scavenge the fuel supply system with the fuel priming pump.

TRANSPORTATION

The trucks can be transported by rail, water or air. The following should be done beforehand.

1. Before loading, bring air pressure in tyres to 320 kPa (3.2 kgf/cm²) and close the wheel valves. In trucks without the tyre inflation system, the tyre pressure should be nominal.

2. After arranging a truck on a carrier:

— apply the parking brake;

— engage the 1st gear in gearbox and low gear in distributor box;

— cut off the fuel feed (by pulling out the engine stop knob to the full);

— cut off the storage battery.

3. Load and unload the truck by means of a sling lifter (Fig. 151) or by its own power.

If the cooling system is filled with water, the need of its draining should be decided from the local conditions.

When carrying the trucks by rail, arrangement and fastening of trucks on flat cars should comply with the regulations in force.

A truck placed on a flat car should be secured by two guys on the rear towing device and by two guys on front tow hooks. Thrust wooden bars of 100×160×760 mm should be placed ahead of the front wheels and behind the rear wheels.

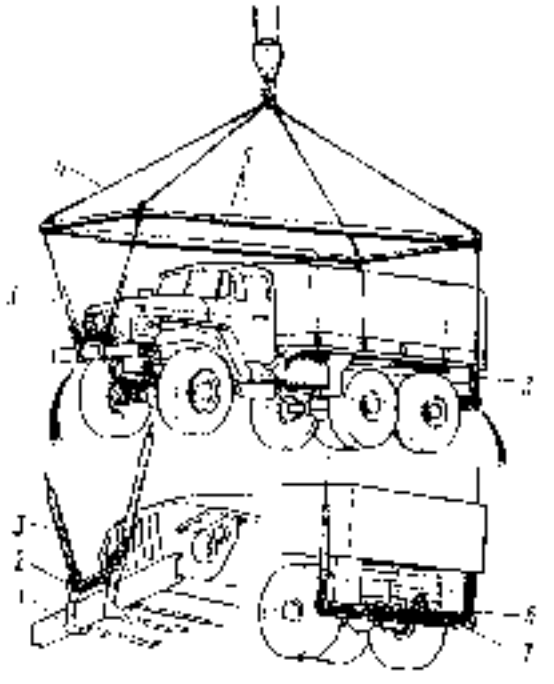

Fig. 151. Application of Hoisting Slings.
1 — truck front bolter; 2 — bolter catch; 3 — protecting rubber hoses; 4 — rope; 5 — frame; 6 — clamp; 7 — rear bar

A truck placed on coupled flat cars (Fig. 152) should be secured by two guys on the rear towing device and two guys on the middle axle spring support brackets. Fix thrust wooden bars ahead of the front axle wheels and behind the rear axle wheels. The front wheels should be also fixed by thrust bars outside the wheels.

Number of wires in a guy, diameter of wires, also the number of nails needed for nailing thrust bars should be selected depending on the mass of the truck (laden or unladen) according to the specified Regulations.

In every case, coordinate the carrying conditions with a station of departure. For compliance with railway clearance 02-BM GOST 9238—83, remove the canopy and bows from the truck platform.

For transportation by air make appropriate preparations and additionally, release the springs by a device provided by the shipping agency. These devices should not fall out at vibration and should resist crushing which may lead to loosening of truck fasteners.

Fill the truck fuel tanks to half of their capacity.

Arrange and fasten the truck as required by special layouts.

For transportation by water, load the truck unladen.

Loading, arrangement and fastening of the truck carrying chassis-mounted machinery are described in the appropriate manuals.

Trucks are carried by sea ships in all cargo structures (holds, tweendecks). Location of trucks on

weather deck should be approved by the cargo owner — shipper.

Locate trucks in the hold or on the deck so that the distance between them is at least 250 mm at the radiator side and at least 130 mm at other sides.

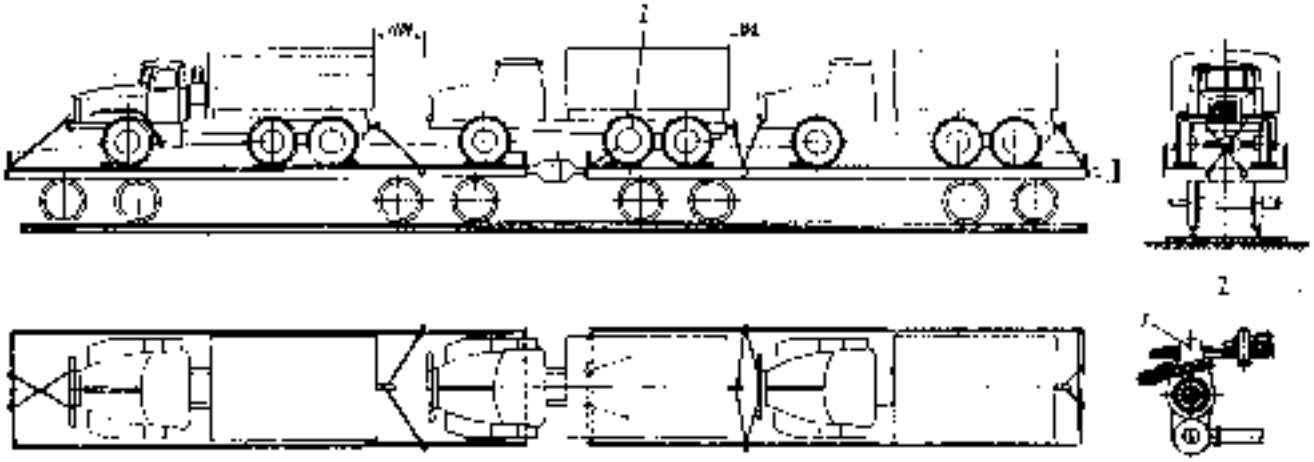

Fig. 152. Loading and Securing of Three Trucks on Two Four-Axle Flat-cars.
1 — spring support bracket

After locating the truck on the ship, secure it from longitudinal and lateral displacement by special fixing devices provided on the ship or by wire braces. Tension the latter by twisting their threads with a tommy bar until the truck is fixed reliably. Loosening of braces or separate wires is not permissible.

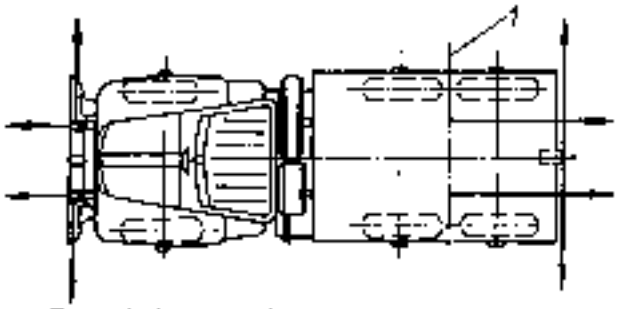

Fig. 153. Securing of Truck on Weather Deck:
1 — balancing weight axis

Fix the braces on front tow hooks, balancer suspension axle, and rear towing device. Fixing versions are shown in Figs 153, 154.

On a bolster truck, braces should be fixed on rear tow hooks. Fixing devices or braces should not touch the truck tyres. To prevent lateral displacement of the truck on the ship, place chocks under truck wheels.

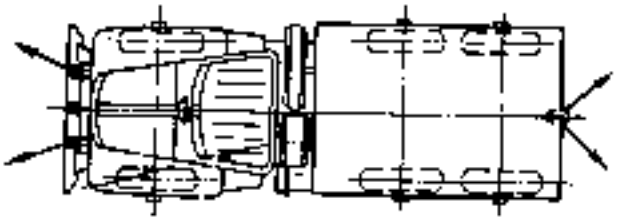

Fig. 154. Securing of Trucks in Cargo Hold

Arrange and fix truck according to the ship layout requirements.

Locating and fixing the truck for transportation is the responsibility of the carrier agency.

I. TORQUES APPLIED FOR TIGHTENING MAIN THREADED JOINTS, N·m (kgf·m)

Engine

Cylinder block bearing bolts	82—92 (8.2—9.2)
Fastening bolts:	
cylinder heads	157—176 (16—18)
cylinder head covers	90—96 (9.0—9.6)
main bearing caps	210—235 (21.0—23.5)
connecting rod caps	130—140 (13—14) or up to lengthening by 0.25—0.27 mm
flywheel	170—190 (17—19)
flywheel case	
M10	54—56 (4.5—5.6)
M12	90—110 (9—11)
tappet guide	75—95 (7.5—9.5)
camshaft drive intermediate gear pins	
M10	58—62 (5.8—6.2)
M12	90—100 (9—10)
oil pump	49—60.8 (5.0—6.2)
oil case	15—17 (1.5—1.7)
inlet manifold connecting pipe	9—13 (0.9—1.3)
Nuts of valve rocker posts	44.1—51.91 (4.4—5.6)
Nut of valve rocker adjusting screw	44.1—54.91 (4.4—5.6)
Screw-stopper of inlet injection advance coupling body	8—10 (0.8—1.0)
Fastening nuts:	
high-pressure fuel pipes	24.5—44.2 (2.5—4.5)
injector atomizer	70—80 (7—8)
injector fastening clamp	32—40 (3.2—4.0)
fuel injection advance coupling	100—120 (10—12)
exhaust manifold pipes	32—45 (3.2—4.5)
muffler	23.5—35.3 (2.4—3.6)
muffler intake pipes to exhaust manifolds	27.6—35.3 (2.8—3.6)
Locknuts of fastening muffler intake pipes to exhaust manifolds	30.6—41.5 (3.1—4.1)

Clutch and gearbox

Fastening bolts of clutch case to flywheel case	90—100 (9—10)
Gearbox to clutch case fastening nut	140—150 (14—15)
Gearbox output shaft flange fastening nut	200—240 (20—24)
Clutch case to flywheel fastening bolts:	
M10	55—59 (5.5—6.3)
M8	25—30 (2.5—3.0)

Distributor box

Primary shaft, layshaft and differential rear holder bearing fastening nuts, not less than	200 (20)
Distributor box flange fastening nuts, not less than	200 (20)
Differential rear holder fastening bolts	55—65 (5.5—6.5)
Fastening nuts of distributor box suspension right-hand bracket to front and rear supports of cross-members Nos 2, 3	39.22—54.92 (4.0—5.6)

Propeller Transmission

Centre cross bearings supporting plate fastening bolts	14—17 (1.4—1.7)
Fastening bolt nuts:	
intermediate and middle shaft flanges	40—50 (4—5)
front and rear propeller shaft flanges	80—90 (8—9)

Drive axles

Fastening bolts:	
final drive to axle case:	
M14	120—150 (12—15)
M18	190—240 (19—24)
covers and sleeve and pressure washer of bearings of driving spur gears; covers of bearing sleeve and rear cover of shaft of driving bevel gear	60—80 (6—8)
hub covers	6—18 (0.6—1.8)
covers of bearing sleeves of driving bevel gear and steering knuckle seal	12—18 (1.2—1.8)
side cover of final drive	44—56 (4.4—5.6)
covers of differential bearings	250—320 (25—32)
Fastening nuts:	
final drive to axle case	120—150 (12—15)
ball supports in semi-axle case	250—280 (25—28) *
steering arms and covers of king pin bearings	110—140 (11—14)
front axle journals	110—140 (11—14) *
final drive flanges minimum	250 (25)
differential caps	120—140 (12—14)
Nut and locknut of bearings of driving bevel gear	450—500 (45—50)
Locknuts of wheel hub bearings	400—500 (40—50)
Nuts of wheel hub bearings	200—250 (20—25) unto do through ⅓—½ turn, maximum

Suspension

Torque rod pin fastening nuts	600 (60)
Front spring lug U-bolt nuts:	
removed from truck	20 (2)
installed on truck	turn on fully, undo by 1.5—2 of a turn
Fastening nuts:	
front spring U bolts (fully laden)	400—500 (40—50)
shock absorbers	40—50 (4—5)
shock absorbers eyes	100—120 (10—12)
Front spring lug bolts	250—320 (25—32)
Front spring rear bracket brace bolts	
upper	120—160 (12—16)
lower	180—220 (18—22)
Front spring centre bolt	30—70 (3—7)
Rear spring U bolt nuts (fully laden)	500—600 (50—60)
Fastening bolts:	
balancer brackets to cross-piece	110—160 (11—16)
upper torque rod bracket	150—200 (15—20)
front spring front brackets to side member lower beam	120—160 (12—16)
balancer pin and bracket assy	700—800 (70—80)
Balancer end bracing bolts	44—56 (4.4—5.6)

Wheels

Wheel fastening nuts	400—450 (40—45)
Tube valve nuts	22—32 (2.2—3.2)

Spare wheel holder

Hinged bracket fastening clamp nuts	20—28 (2—2.8)
Hinged bracket fastening clamp locknuts	40—56 (4.0—5.6)

Steering gear

Fastening nuts	
steering rod ball pins and booster	150—200 (15—20)
steering pitman	400—450 (40—45)
steering gear worm	40—56 (4—5.6)
spool valve	20—23 (2—2.3)
Steering gear in frame fastening bolts:	
M14	80—100 (8—10)

---

* The given torque is used for tightening nuts of studs with 8.6 class of strength (marking on stud end face)

Nuts of studs without marking of strength class should be tightened with a torque of:	
journal fastening	70—100 N·m (7—10 kgf·m)
ball support	160—200 N·m (16—20 kgf·m)

M16	110–140 (11–14)
Steering wheel case side covers, cover and spool valve body fastening bolts	44–56 (4.4–5.5)
Steering wheel fastening nut	80–100 (8–10)

Brake system

Compressor unit head fastening stud nuts	12—16 (1.2—1.6)
Parking brake shield fastening bolts	80–100 (8–10)

Electrical equipment

Generator pulley fastening nut	60–80 (6–8)
Brake signal switch BK-125, max	24.5 (2.45)
Auxiliary brake signal switch MM125Д, max	30.0 (3.0)
Air system minimum pressure sending unit MM124Д, max	30.0 (3.0)
Coolant temperature sending unit TM108A, max	24.5 (2.45)
Coolant emergency overheating sending unit TM111, max	24.5 (2.45)
Oil pressure emergency drop sending unit MM111Д, max	45 (4.5)
Oil pressure sending unit MM376, max	150 (15)

Bolster

Fastening bolts:	
bolster	
M14	80–90 (8–9)
M16	120—140 (12–14)
sledge runners	80–90 (8—9)
Underframe U bolt nuts	90—100 (8—10)

Winch

Bolts of winch drive propeller shaft flanges	60–65 (6—6.5)

Cab

Nuts of cab fastening bolts	40–60 (4–6)
Locknuts of cab fastening bolts	120—140 (12–14)

2. DATA FOR CHECKING AND ADJUSTING

Clearances between valve stems and rockers on cold engine, mm:	
intake	0.25–0.30
outlet	0.35–0.40
Oil pressure in lubrication system of warmed engine at speed, kPa (kgf/cm²):	
rated	400–550 (4–5.5)
idling, not less than	100 (1.0)
Injector needle lift initial pressure, kPa (kgf/cm²):	
new injector	22,900—22,700 (229–227)
in operation, minimum	20,000 (200)
Coolant temperature in cooling system, °C	98
Engine fan and water pump drive belt sagging at 10 N (1 kgf), mm	15–22
Clutch pedal travel, mm:	
free	30–40
full, not less than	195
Steering wheel free travel (wheel booster, pump running), not more	25°
Wheel toeing-in across rim, mm	1—3
Wheel rim maximum angle:	
inner	31.5°
outer	26°
Brake pedal travel, mm:	
free	20–30
full	150—160
Clearance between brake drum and shoe linings, mm	0.20—0.35
Clearance between parking brake drum and lining, mm	0.3—0.6
Pressure in air system, kPa (kgf/cm²)	650—820 (6.5—8.2)

3. DATA ON MASS OF MAIN COMPONENTS (less Fuel, Lubricant and Fluid), kg

Power plant	1040
Oil cooler	4.9
Cooling system radiator	37
Starting preheater boiler	9.2
Main fuel tank*	34.8
Auxiliary fuel tank	7.4
Muffler	17.7
Gearbox and clutch case assy	246
Distributor box	178
Drive front axle, hubs, brakes and steering rod assy	606.5
Rear (intermediate) axle with hubs and brakes	590
Truck frame	694
Towing arrangement	94
Front spring	67
Rear spring	96
Rear suspension balancer	24
Wheel 254Г-508	53.2
Wheel 330-533	64.5
Tyre 370-508 (14.00-20)	112
Tyre 1100×400-533	107
Steering gear	39
Parking brake	19.5
Storage battery 6СТ-190ТР	57.2
Auxiliary power take off	13
Winch with reduction gear	287
Winch rope with hook	100
Truck platform	770
Platform canopy	73.5
Cab	329
Fenders	120.38

* Ural 4420-02 bolster truck has 48.7 kg main fuel tank.

4. WIRE COLOURING

Wire colour	Wire Ref. No. in Fig. 117
Black	*8, 17, 31, 35c, 52w, 58, 73, 74a, 75, 76, 76a, 80a, 80б*
White	*46, 49a*
Orange	*15, 15б, 43, 48a, 56a, 56б, 56в, 56c, 81, 87, 87a, 135, 145a*
Blue	*30d, 30e, 30г, 42г, 45, 45a, 45б, 49, 49a, 57a, 57б, 57в, 82, 83a, 122, 123*
Yellow	*15г, 15д, 39, 39a, 33б, 46, 41г, 52, 53a, 53г, 53д, 70, 84, 84a, 85, 85a, 85c, 89*
Red	*16, 30a, 30б, 30c, 31a, 31б, 31г, 34, 44a, 54г, 54e, 55, 55a, 55c, 77б, 77в*
Brown	*30г, 30д, 31в, 42, 47, 47a, 51a, 51б, 51в, 51г, 51д, 51e, 68, 71, 80, 80, 80a*
Green	*12a, 12в, 12г, 30б, 30a, 30в, 32, 34, 41, 41a, 41б, 43, 51, 51б, 51г, 51e, 51ж, 51c, 51a, 51б, 52ж, 55б, 78*
Grey	*35, 41г, 53б, 54, 54a, 54г, 54д, 57, 67, 77, 77a, 86, 86a, 88, 91, 100, 100a*
Violet	*15a, 52, 52a, 52б, 52в, 52г, 52д, 52e, 52ж, 52з, 56, 69, 75, 79, 82, 82a, 82б, 90б, 90в, 90г, 99, 101, 135б*

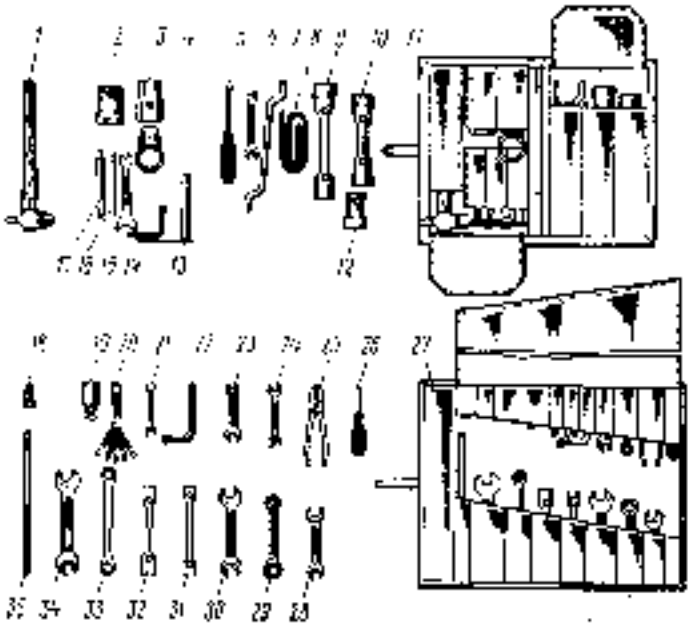

Fig. 155. Tools of Ural-4320-02 Truck

5. SPARE PARTS, DRIVER'S TOOLS AND ACCESSORIES

The Manufacturer supplies each truck with a single set of spare parts, tools and accessories, including spare parts intended for elimination of separate troubles during the guarantee period of operation, driver's tools and accessories.

On special order the Manufacturer supplies a group set of spare parts (SPT&A-G) — one for 10 trucks.

In replenishment of faulty parts by corresponding spare parts from the Sets of SPT&A, abide by the following technical documents:

— Service Manual «Ural-4320-02 Truck and Its Modifications»;

— Repair Manual «Ural-4320 Towing Truck and Its Modifications»;

— Overhaul Manual of Ural-4320, Ural-4420, Ural-44201 Trucks (without engines), parts 1, 2, 4.

The guarantee period of preservation treatment of SPT&A sets is three years, provided the sets are stored in closed rooms.

Owing to continuous process of the truck design modification, the range of spare parts of SPT&A sets may differ. The more precise range of spare parts is given in the shipping documents supplied with each truck.

During shipment of the trucks SPT&A-G is laid up the transportation box of SPT&A. Recommendations for the in-service location of the tools and accessories on the truck are given in the present section.

The layout of tools and accessories for the equipment mounted on the truck chassis is determined by the Manufacturer.

When running the truck the amount of the tools and accessories, namely towing rope (item 8, Fig. 157) may be determined by the driver himself.

Location of Tools and Accessories in Ural-4320-02 Truck

Pos. No. in Fig.	Description	Qty.
	In tool box 5 (Fig. 157) under platform in large tool bag 11 (Fig. 155)	
1	Bevel hammer 800 g	1
	Socket wrenches:	
2	55	1
3	41×46	1
4	Wrench head 46	1
5	Screwdriver 250×1,4 (250×1,6)	1

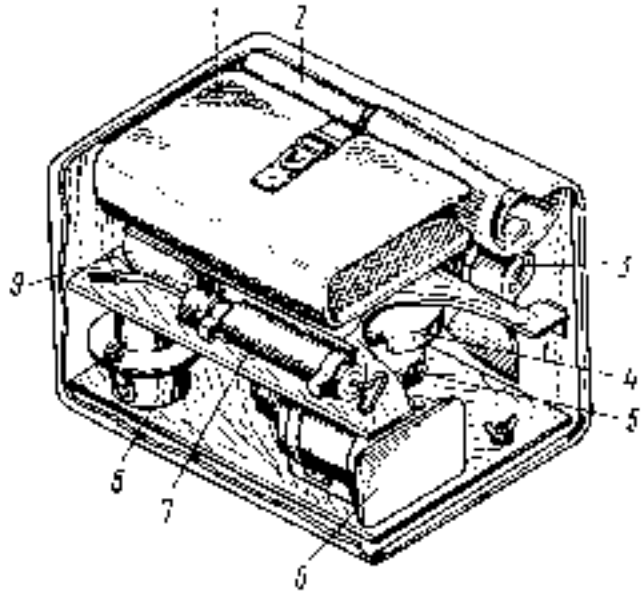

Fig. 156. Tool Box:

1, 2 — tool bags; 3 — axe; 4 — axe handle; 5 — socket wrench 140; 6 — jack; 7 — lever plunger; 8 — [illegible]; 9 — [illegible]

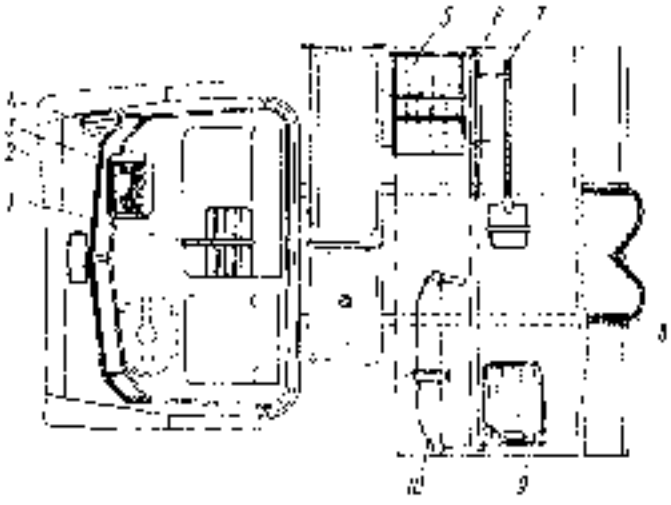

Fig. 157. Location of Tools and Accessories in Ural-4320-02 Truck

1 — DHB case fastening belt; 2 — portable lamp; 3 — plug; 4 — Ural and [illegible] case; 5 — tool box; 6 — tyre inflator; 7 — switching spade; 8 — towing rope; 9 — 20 [illegible] can; 10 — [illegible] saw

Pos. No. in Fig.	Description	Qty.
6	Wrench 11×12	1
7	Ring wrench 24×27	1
8	Hydraulic brake bleeding pipe	1
9	Socket wrench 27×30 for wheels	1
10	Socket wrench 30×32 for spring U bolt nuts	1
12	Socket wrench 36	1
13	Wrench for hydraulic brake bleeding	1
14	Socket wrench 6×8	1
15	Wrench for shock absorber nut	1
16	Drift pin	1
17	Chisel	1
	In tool box under platform in tool bag 27 (Fig. 155)	
18	Socket wrench head 21	1
19	Injector remover	1

Ref. No. in Fig.	Description	Qnty
20	Feeler gauge	1
21	Wrench 8×10	1
22	Socket wrench 10	1
23	Wrench 12×13	1
24	Combination wrench 14×14	1
25	Combination pliers	1
26	Combination screwdriver	1
28	Wrench 17×19	1
29	Ring wrench 22×24	1
30	Wrench 22×24	1
31	Socket wrench 13×17	1
32	Socket wrench 19×22	1
33	Ring wrench 17×19	1
34	Wrench 27×30	1
35	Crankshaft turning bar	1
	In tool box under platform (Fig. 156)	
3	Axe	1
4	Axle-shaft remover	1
5	Socket wrench 140	1
6	Hydraulic jack	1
7	Lever plunger pressure gun	1
8	Ford valve	1
9	10 ltr can	1
	Laid out without fastening in tool box	
—	Coupling head with union	1
—	Bucket pail	1
—	Air hose	1
—	Fuel transfer pump	1
—	Tyre inflation collar remover	1*1
—	Winch pulley	1*2
	Fixed under platform (Fig. 157)	
6	Tyre iron	2
7	Interchange spade	1
9	20 ltr can (in special container)	1
10	Cross-cut saw	1*3
	In luggage compartment (Fig. 157)	
1	Connector plug	1
2	Portable lamp	1
—	Operating instructions	1
—	Gaskets for storage battery plugs	12
	On cab front side panel (Fig. 157)	
4	First aid kit case	1
	On platform (Fig. 157) (placed in jacket and fixed on front board)	
—	Platform canopy, assy	1
—	Spacer pipes	1
—	Canopy jacket	1
8	Towing rope (in longitudinal bars of platform base)	1
	In special seats of platform front part	
	Canopy bows (set)	1
	In spare parts box	
—	Warmth-keeping jacket for radiator and side panels	1

*1 For 3 trucks (on special order).
*2 On special order.
*3 One for ten trucks.

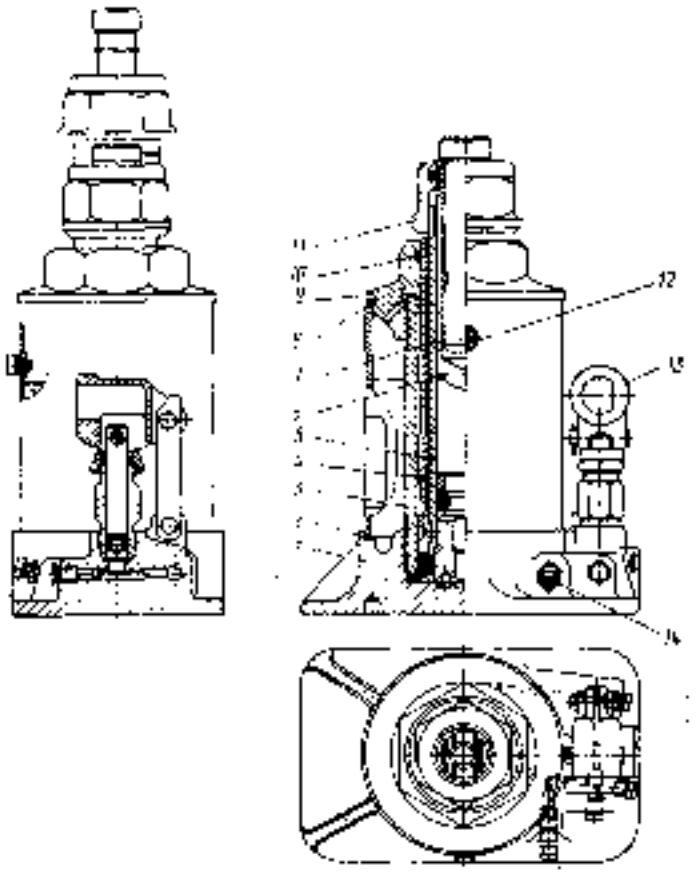

Fig. 158. Jack:
1 — base; 2 — gasket; 3 — outer working plunger cylinder; 4 — cylinder pipe; 5, 6 — outer and inner working plungers; 7 — screw; 8 — packing; 9 — cage head; 10 — packing ring; 11 — plunger head; 12 — plug; 13 — pump lever; 14 — shut-off needle

Special Notes on Location of Tools and Accessories

On Ural-4420-02, Ural-44202-02 bolster trucks the tools are kept in a tool box behind the cab, the cans are in a special container, towing rope is fixed on the rear deck, a spade — on the rear right-hand fender (for Ural 4420-02 bolster truck).

Ural-43202-02 truck, Ural-44202-02 bolster truck has no tyre inflation collar puller, feeding valve, gaskets for storage battery plugs. An axe, spade, towing wire rope, 20 ltr can, saw (one per ten trucks) may be supplied on a special request. The large tool bag contains additionally a hose for inflating tyres and a tyre pressure gauge.

On Ural-43202-02 truck a spare wheel drive winch is kept on a right-hand tool box.

6. TELESCOPE-TYPE HYDRAULIC JACK

Specifications

Type	telescopic, hydraulic, with two working plungers
Lifting capacity, kN (tf)	50 (5)
Jack height if plungers lowered and screw turned in, mm	280
Load lift height, mm	280
Oil volume, l	0.6

For lifting a load with the jack:

— set the jack in the required position, turn out screw 7 (Fig. 158) as desired, if the ground is soft, place beforehand a strong wooden board or some other flat object under the jack base;

— make some quick pumping strokes of lever 13 if shut-off needle 14 is screwed out;

— using a tyre iron, screw home the shut-off needle turning it clockwise;

raise the working plungers as required rocking the tyre iron fitted in lever 13.

If the jack fails when the valves are seized, slightly knock at the delivery plunger lever with the tyre iron.

For lowering the load:

— slowly screw out the shut-off needle turning it counter clockwise;

— screw out plug 12 and let out the air; on lowering, screw the plug home.

When using the jack, place pads under the truck wheels. Check that the parking brake has been applied and the lower gear has been engaged in the gearbox.

For lifting the front axle, set the jack screw head in the recess on the spring fastening clip; for lifting the rear or middle axle, set it under the spring support bracket.

When the jack is out of action, the head screw should be turned in, the working and delivery plungers lowered and the shut-off needle screwed out.

Repair the jack in due time. If oil seeps through plungers or shut-off needle, replace cotter nuts of the casing head of oil leaks through joints of casing parts.

Do not raise the working plungers by hand when the shut-off needle is screwed home; otherwise air might enter the jack working chamber.

If the jack fails to ensure full working strokes of the plungers, check the oil level. Add oil up to the filler level, close with plug 12 after lowering the jack plungers completely and if the jack stands upright.

If the jack fails due to dirt accumulated on parts of the jack working chamber, drain soiled oil through the filler, fill kerosene and pump the jack through after screwing out the shut-off needle. Then, on draining the kerosene, fill filtered oil grade BMTO. The jack can be filled with oil MT-16A. Do not use oil or fluid of other grades.

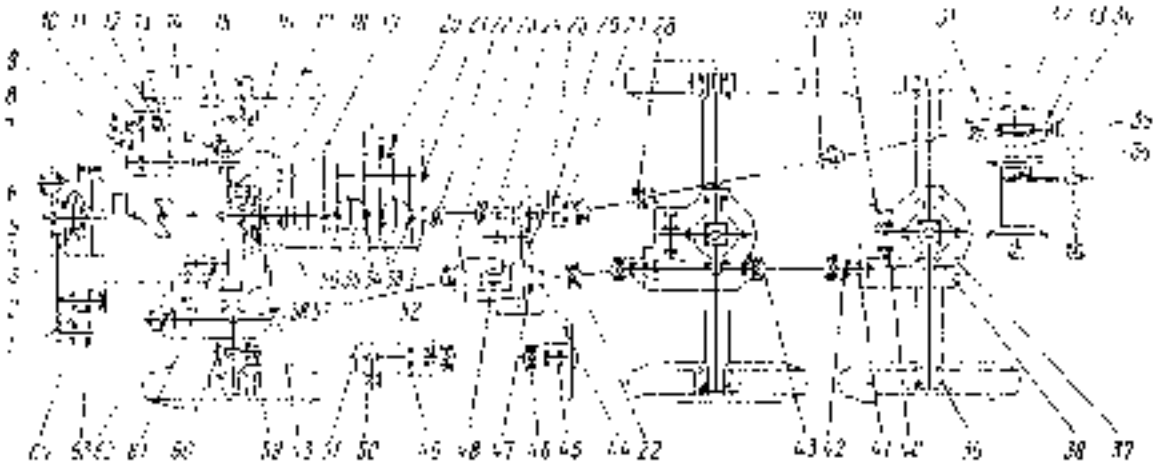

Fig. 159. Layout of Bearings

7. ANTIFRICTION BEARINGS

Item in Fig. 159	Designation	Description	Dimensions, mm	Location	Qty per truck
1	1160304K	Single-row radial ball	20×52×16	Water pump (rear support)	1
2	1180305	Ditto	25×62×21	Ditto (front support)	1
3	204A	»	20×47×14	Fan drive hydraulic coupling	1
4	1.4	»	70×110×20	Ditto	1
5, 15, 61	205A	»	25×52×17	Fan drive hydraulic coupling, HPFP drive, steering booster pump	3
6	6.180504XC9	»	20×47×18	Fan drive tensioner	2
7	50207A	»	35×72×17	Fan drive hydraulic coupling	1
8	8.102	Single-row thrust ball	15×28×9	Oil centrifugal filter	1
9	261	Single-row radial ball	32×52×10	HPFP speed regulator	2
10	203	Ditto	17×40×12	Ditto	1
11	166	»	30×55×13	»	1
12	8103	Single-row thrust ball	17×30×9	»	1
13	6.7204A	Single-row tapered roller	20×47×15.25	HPFP	2
14, 16, 45	207 K5	Single-row radial ball	35×72×17	HPFP drive, steering wheel shaft and compressor crankshaft	5
17	175806A	Two-row tapered roller	30×62×50	Camshaft drive	1
18	1221 9K31	Radial with short cylindrical rollers	65×120×23	Gearbox layshaft (front support)	1
19	1205K	Single-row radial ball	25×52×15	Gearbox input shaft (front support)	1
20	6.907K	Radial with long cylindrical rollers	32×52×49	Gearbox reverse gear cluster	2
21	3610	Spherical roller radial	50×110×40	Gearbox layshaft (rear support)	1
22	4.8190.K3C10	Roller needle	33.6×50×35	Intermediate propeller shaft centre crosses, middle axle drive propeller shaft centre crosses	16
23	30111**	Single-row radial roll	55×120×29	Distributor box front axle drive shaft	1
24, 32	1.11231**	Single-row tapered roller	60×110×34	Distributor box input shaft, winch drum shaft	3

Item in Fig. 129	Designation	Description	Dimensions, mm	Location	Qty per truck
1	2	3	4	5	6
25	6-76110A	Ditto	50×110×32.5	Distributor box (axle)	2
26	211A	Single-row radial ball	55×100×21	Auxiliary power take-off shaft (front support)	1
27	50208A	Ditto	40×80×18	Ditto (rear support)	1
28	804704K3C10	Roller needle	32×35×26.5	Winch drive propeller shaft centre crosses	16
29	180509K2C17	Single-row radial ball	40×80×23	Winch drive intermediate propeller shaft (support bearings)	2
30	7510A**	Single-row tapered roller	50×110×29.5	Final-drive driving spur gear	6
31	46310AK	Single-row radial thrust ball	50×110×27	Winch reduction gear worm (front support)	1
33	312A	Single-row radial ball	60×130×31	Winch reduction gear worm (rear support)	1
34	6311	Single-row radial ball	55×105×35	Winch reduction gear worm (rear support)	1
35	7216A	Single-row tapered roller	80×140×26.5	Winch drum shaft	1
36, 44	311**	Single-row radial ball	55×120×29	Distributor box rear axle drive shaft, winch rope winding guide lead screw	3
37	12311KM	Roller radial with short cylindrical rollers	55×120×29	Final-drive driving gear shaft (rear support)	2
38, 42	5-7515A	Single-row tapered roller	75×130×33.5	Differential and final drive driving gear shaft (front support)	9
39	2007124M	Ditto	120×180×38	Wheel hubs	12
40	12318KM	Roller radial with short cylindrical rollers	90×190×43	Final-drive driven bevel gear	3
41	7516A	Single-row tapered roller	80×140×35.25	Final drive driving gear shaft (front support)	3
45	804805K1	Roller needle	25×39×30.5	Front and rear axle drive propeller shaft centre crosses	16
46	704902K6/C10	Ditto	15.2×28×20	Steering propeller shaft centre cross	8
47	220A**	Single-row radial ball	100×180×34	Distributor box differential	1
48	216**	Ditto	90×160×30	Ditto	1
49	6207	Single-row thrust ball	35×62×18	Steering gear worm shaft	2
50	913/45	Roller needle	45×55×38	Steering gear segment shaft	2
51	2306KM	Roller radial with short cylindrical rollers	30×72×19	Steering gear worm shaft	1
52	30412AK	Single-row radial ball	60×150×35	Gearbox output shaft (rear support)	2
53	664916Д	Roller needle two-row without rings	81×92×42.5	Gearbox output shaft 1st speed and reverse gears	2
54	664916Е	Roller needle	81×92×42.5	Gearbox output shaft gears of 2nd and 3rd speeds	2
55	-	Roller 5.5×15.8	—	Gearbox output shaft 5th speed gear	88
56	76-592708A11	Roller radial with short cylindrical rollers	40×77.5×23	Gearbox output shaft (front support)	1
57	170112AK1	Single-row radial ball	60×150×35	Gearbox input shaft (rear support)	1
58	980714K17	Single-row radial ball	70×150×21.5	Clutch release sleeve	1
59	105710KC17	Thrust ball	30×90.5×23	Front axle steering knuckle	2
60	12309KM	Roller radial with short cylindrical rollers	45×100×25	Front axle steering knuckle	4
62	154901	Roller needle	12×22×15	Steering booster pump	1
63	5-180603K20.9	Single-row radial ball	17×47×19	Generator (rear support)	1
64	9-1160304K2C9	Ditto	20×52×18	Generator (front support)	1
—	-	Roller 2×11.8	- -	Clutch pull-out lever	160

* Inner diameter × outer diameter × mounting width
** Delivered according to Specifications.

8. FUELS, LUBRICANTS AND SPECIAL FLUIDS USED IN URAL-4320-02 TRUCK AND ITS MODIFICATIONS

Main grades		Substitutes		Qty per one filling in truck
Designation	Standard	Designation	Standard	
Diesel fuel (3-40; 3 months 15°C; 3 months 45. A	GOST 305—82			270 lit

Main grades		Substitutes		Qty per one filling in truck
Designation	Standard	Designation	Standard	
Motor oil M-10Г₂к, M-8Г₂к	GOST 8581—78	Motor oil M-6з-10В		24.80 lit
Transmission oil ТСп-15К, ТАД-12рк	GOST 23652-79	Oil Ап-15В ТСп-10	GOST 23652-79	32.98 lit

Main grades		Substitutes		Q-ty per one permitting in truck
Designation	Standard	Designation	Standard	
Hypoid oil TCmn		Motor oil M-10Гк M-8Гк, M-6з/10В		7.50 ltr
Oil grade «Px»		Spindle oil AV		4.50 ltr
Lubricant ШРАТИМ-201	GOST 6267—74	Lubricant Зимол Lubricant Лита		0.59 kg
Lubricant Литол-24	GOST 21150—75	Solid oil Ж, cup grease Ж	GOST 1033—79	9.92 kg
		Solid oil С, cup grease С	GOST 4366—76	
		Lubricant Зимол		
		Cardon grease АМ	GOST 5730—84	
		Lubricant 158		
		Lubricant Лита		
Graphite grease УСсА	GOST 3333—80	Solid oil Ж	GOST 1033—79	
		Solid oil С	GOST 4366—76	1.93 kg
		Lubricant Литол-24	GOST 21150—87	
Lubricant ВНИИНП 510			GOST 21150—87	0.008 kg
Lubricant ЦТ-1				0.12 kg
Shock-absorber fluid АЖ-12Т	GOST 23008—78	Spindle Lubricant AV		1.70 ltr
Brake fluid ТТЖ-22М		Brake fluid «Нева» or «Тосол»		2.3 ltr
Ethyl alcohol	GOST 18300—87, GOST 17299—78			0.202 kg

Main grades		Substitutes		Q-ty per one permitting in truck
Designation	Standard	Designation	Standard	
Anti-freezing agent «Нева 40», «Нева 65»		Anti-freeze 40/65, ТОСОЛ-А40М, ТОСОЛ-А65М	GOST 159—52	31.0 ltr

9. WASTE OIL COLLECTION, L

Engine	18.0
Gearbox	7.3
Distributor box	2.7
Drive axle reduction gears	12.0
Steering gear case	1.18
Winch reduction gear	6.5
Steering hydraulic system	3.0

10. SOME ADDITIONAL FEATURES OF TRUCK DESIGN

The truck may have components which differ from those described in this Manual. Below are given some features of the design and maintenance of these components.

Spare Wheel Holder

The spare wheel holder base and the tipping bracket are made of rolled stock and welded together.

The spare wheel is lifted and lowered by a winch with a worm reducer. In travel, the wheel is fixed by braces 9 (Fig. 1)

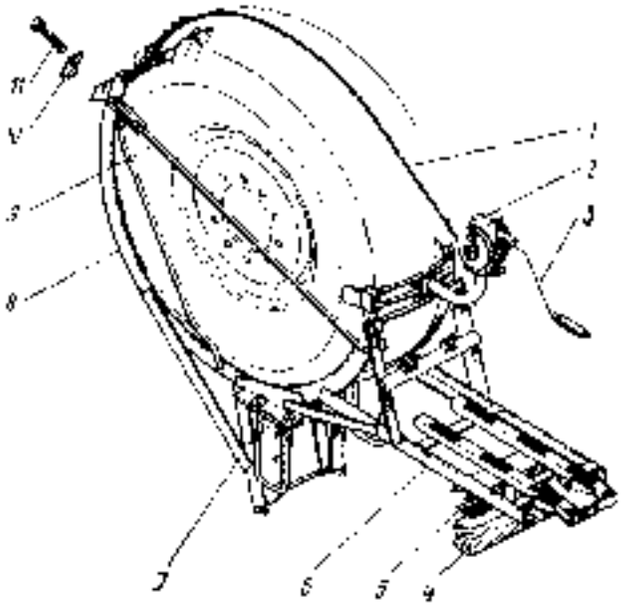

Fig. 1. Spare Wheel Holder:

1 — rope; 2 — reduction unit; 3 — handle; 4 — base bar; 5 — gasket; 6 — holder base; 7 — U-bolt; 8 — tipping bracket; 9 — brace; 10 — clamp; 11 — bolt

and bolts 11. To lower the wheel, release bracket 8 from braces 9 after checking that rope 1 is fastened to the tipping bracket. Fit a removable handle over the reducer shaft.

Turn the handle to lower the bracket together with the wheel. In the lowered position, remove rope 1 from the spare wheel without detaching it from bracket 8 at no more, and roll out the wheel.

The spare wheel is lifted and fixed for travel in reverse to the above, then, slacken the rope.

Servicing of the spare wheel holder consists in checking it for fastening to the truck frame, and fastening of the spare wheel in the holder.

Bearing surfaces of the shafts, gear wheel rim and spare wheel lift worm reducer turns should be lubricated after disassembly with lubricant Zhirovik-24 or solid oil.

Thrust ball bearing 8903 or 8100 is installed in the spare wheel lift reducer.

The spare wheel holder is installed on Ural-43202.02 truck in the horizontal position. The spare wheel holder of Ural-4320.10.2 truck chassis for dropping the body van is located on the frame left-hand side member behind the truck.

The reduction unit handle on Ural-4320.02 truck is placed in the tool box. The reduction unit and the handle on Ural-43202.02 truck are placed in the tool box.

from the system by turning the steering wheel either sides from lock to lock (until air bubbles stop to appear in the tank);

— add fresh oil into the tank up to the top mark of the dipstick;

— stop the engine; check oil level in the tank and add up, if necessary;

— install the tank filler plug back in place.

Service Brake System Control

The truck may be equipped with two-circuit brake control with one line drive to trailer (Fig. 3).

Coupling head 14 type «A» serves for connection of trailer brake control.

The brake drive comprises one air circuit and two hydraulic circuits. One hydraulic circuit actuates brakes of the front

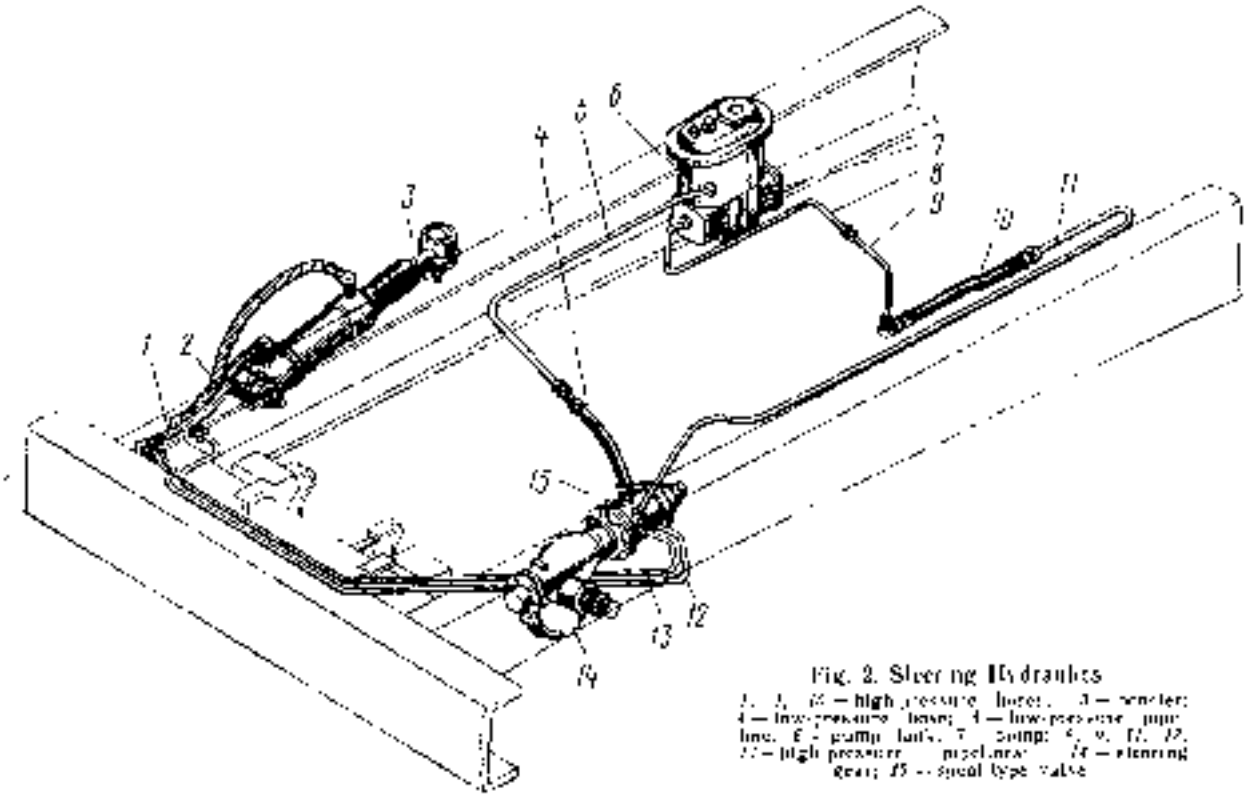

Fig. 2. Steering Hydraulics

1, 2, 14 — high pressure hoses; 3 — booster; 4 — low-pressure hose; 5 — low-pressure pipe line; 6 — pump tank; 7 — pump; 8, 9, 11, 12, 13 — high pressure pipelines; 14 — steering gear; 15 — spool type valve

Hydraulic Steering System

The hydraulic steering system is schematically shown in Fig. 2.

Change of oil:

1. Warm up the engine, so that the hydraulic oil is not below than 20°C.
2. Jack up the front axle.
3. Turn the steerable wheels fully left.
4. Detach the booster hoses: front one — from the union on the frame, the rear one — from the booster union.
5. Remove cover 8 (see Fig. 6b) filter 2 and wash them.
6. Drain oil from the booster by turning the steerable wheel fully right.
7. After draining oil from the pump tank, attach the booster hoses to the frame union and to the booster union.
8. Remove oil residue from the pump tank, install the gauge, filter and the tank cover back in place.
9. Wash the system:

(1) 1.5 ltr of fresh oil into the tank;

start the engine; when the latter is idling, turn the steerable wheels to either sides fully (two or three times) set the wheels in the extreme left position;

drain oil from the system (see Paras 4, 6, 7).

(2) fill and bleed the system as follows:

(1) the tank with 1.5 ltr of fresh oil;

— start the engine; when the latter is idling, bleed air

and middle axles, while the other hydraulic circuit actuates brakes of the rear axle.

The flow diagram is shown in Fig. 4.

The pressure governor automatically maintains pressure in the truck air system.

When air pressure in the air system reaches 820 kPa (8.2 kgf/cm²), the pressure governor communicates the delivery line to the atmosphere, thus shutting off feed of air to the air system.

If the air system pressure drops to 690 kPa (6.9 kgf/cm²), the pressure governor shuts off the atmosphere outlet and the compressor resumes charging air.

Adjust the pressure governor using bolt 6 (Fig. 5): screw in the bolt to increase the actuation pressure and screw out to decrease the pressure. Valve 9 protects the air system from over-pressure should the pressure governor fail. The operation pressure of safety valve 9 is determined by tensioning of the spring, which is adjusted by adjusting screw 7. As soon as a pressure of 900—950 kPa (9—9.5 kgf/cm²) is attained in space A, valve 9 opens and bleeds excessive air to the atmosphere through side holes available in the valve body.

Check the pressure governor for proper performance by observing periodically the air pressure value as shown by the red pointer pressure gauge on the instrument board, with the engine running.

Brake valve (Fig. 6) is designed as a combination unit of piston type in which controls of the brakes of the towing truck and trailers equipped are combined in one unit. The valve is used for distributing compressed air and feeding it to air boosters and trailer brake chambers. The valve upper cylinder is

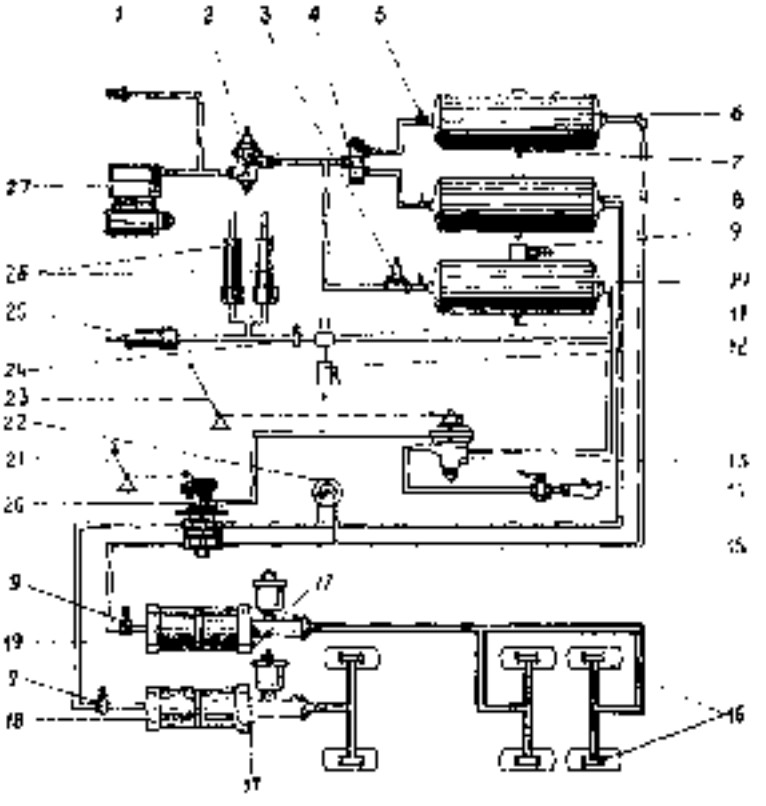

Fig. 3. Service Brake Air-Hydraulic Control:

1 — low valve; 2 — pressure regulator; 3 — single safety valve; 4 — double safety valve; 5 — air system minimum pressure sending unit; 6 — intermediate and rear axles brake circuit air reservoir; 7 — condensate drain valve; 8 — front axle brake circuit air reservoir; 9 — check outlet valves; 10 — air reservoir of trailer and consumers brake circuit; 11 — air-hydraulic booster piston; 12 — air take-off valve; 13 — trailer brake control valve; 14 — coupling head; 15 — air take-off valve; 16 — wheel cylinders; 17 — brake source indicator switch; 18, 19 — air boosters with brake master cylinders; 20 — brake valve; 21 — service brake pedal; 22 — pressure gauge; 23 — parking brake lever; 24 — pneumatic valve; 25 — fuel feed; 26 — hydraulic air cylinder; 27 — auxiliary brake air cylinders; 28 — air compressor.

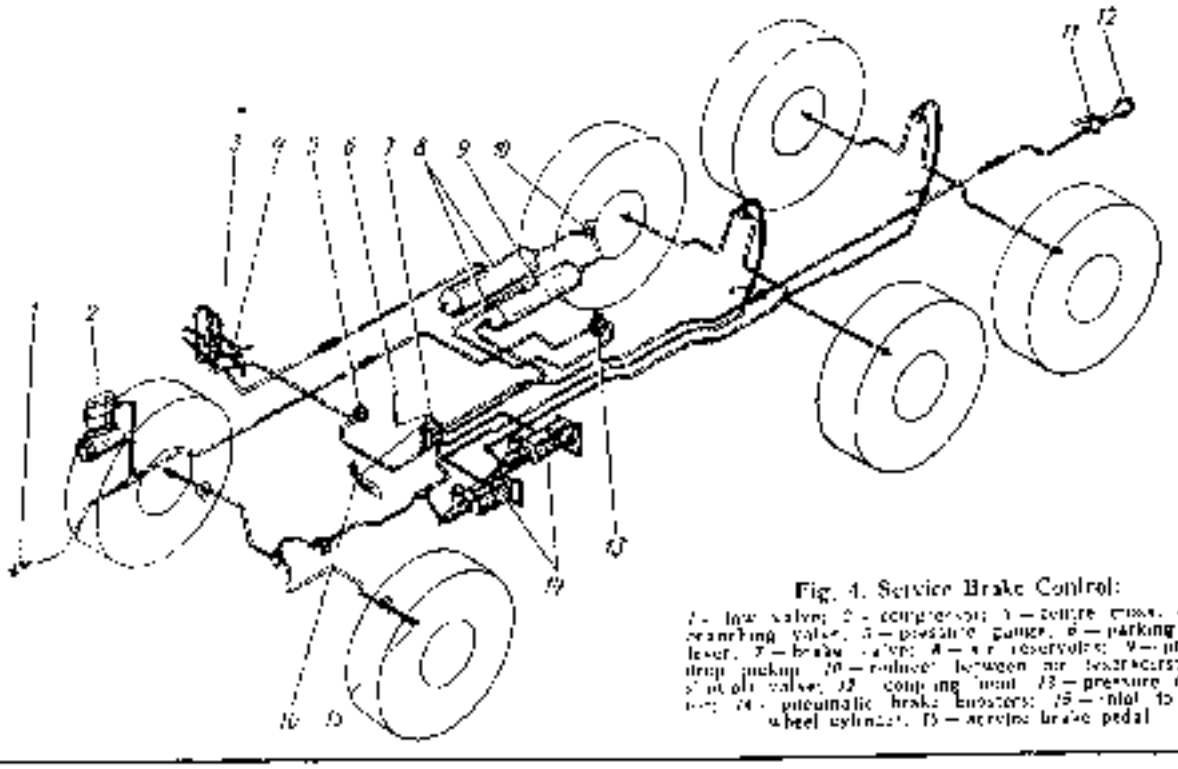

Fig. 4. Service Brake Control:

1 — low valve; 2 — compressor; 3 — safety valve; 4 — air sampling valve; 5 — pressure gauge; 6 — parking brake lever; 7 — brake valve; 8 — air reservoirs; 9 — pressure drop pickup; 10 — reducer between air boosters; 11 — shut-off valve; 12 — coupling head; 13 — pressure regulator; 14 — pneumatic brake boosters; 15 — pilot to brake wheel cylinders; 16 — service brake pedal.

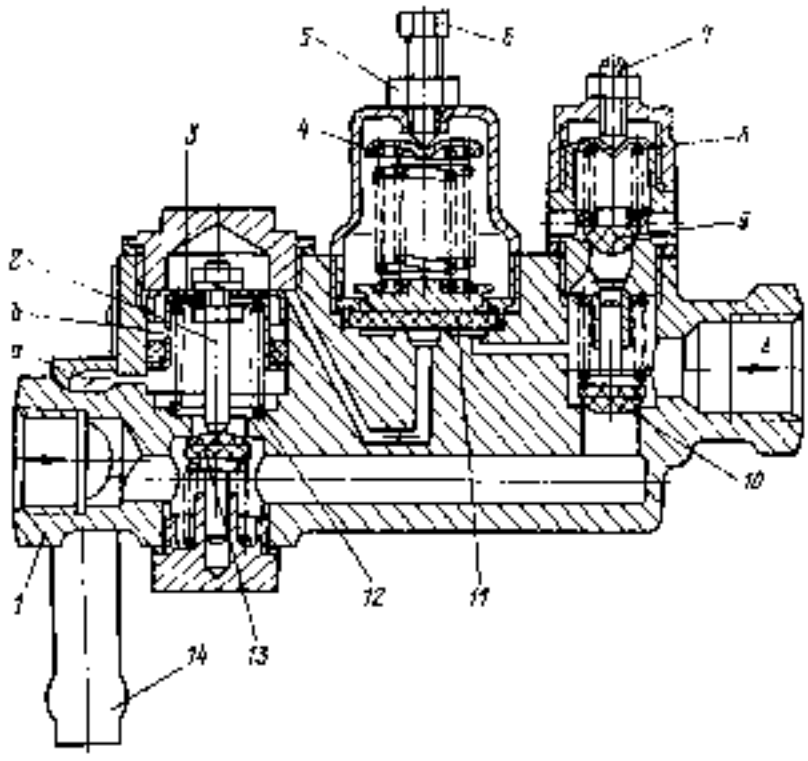

Fig. 5. Pressure Regulator:

1 — body; 2 — rod; 3 — piston; 4, 8, 12 — springs; 5 — bushing; 6 — adjusting bolt; 7 — adjusting screw; 9 — safety valve; 10, 11 — check valves; 13 — diaphragm; 14 — exhaust pipe union; a, b — drain; c — space

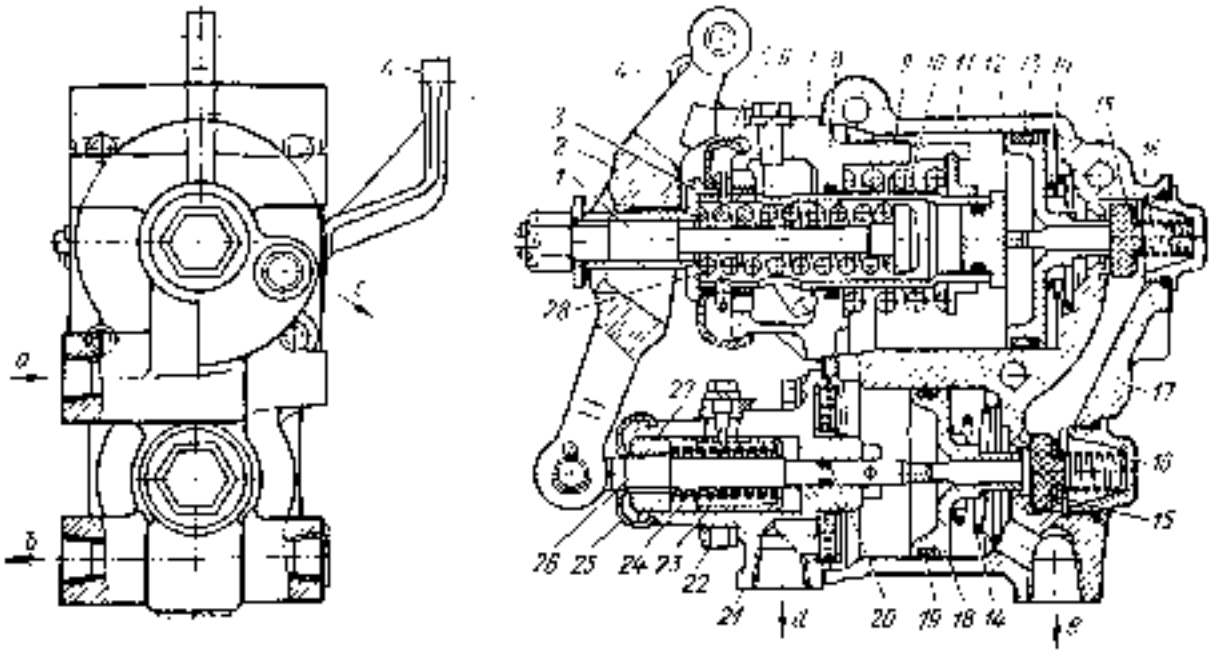

Fig. 6. Brake Valve:

1 — upper cylinder tie; 2 — lever; 3 — adjusting bolt; 4 — hand drive lever; 5, 29 — dashers; 6 — stop screw; 7 — upper cylinder cover; 8, 30 — packing rings; 9 — equalizing spring cups; 10 — equalizing spring; 11 — thrust pin; 12 — upper cylinder piston; 13, 31 — piston collars; 14 — return spring; 15 — valve; 16 — valve spring; 17 — casing; 18 — lower cylinder piston; 21 — lower cylinder cover; 22 — adjusting ring; 23 — adjusting bush; 24, 28 — upper and lower cylinder tie springs; 26 — lower cylinder tie; 27 — washer; a — from air reservoir; b, c — to air booster; c — to trailer pipeline; d — to atmosphere

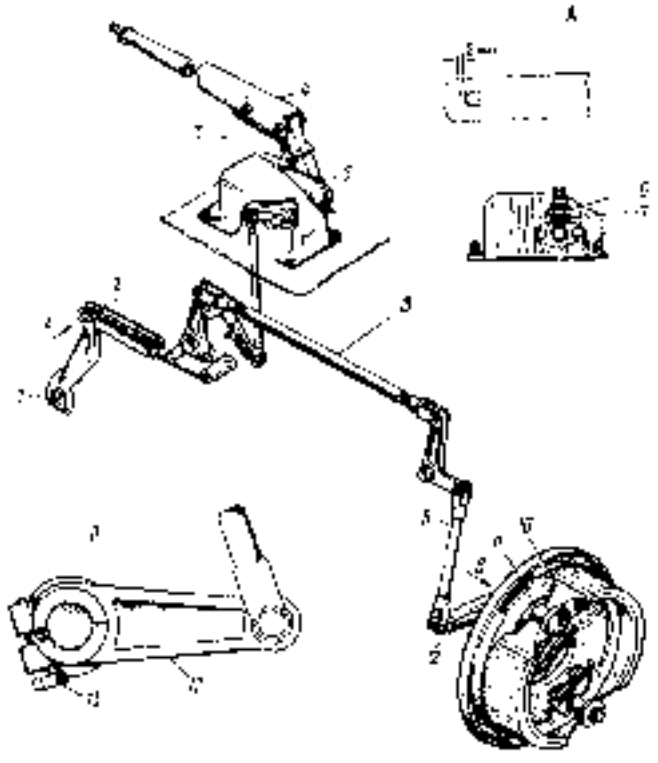

Fig. 7. Parking Brake Drive:

1 — brake valve lever; 2 — brake valve control tie; 3 — pivot; 4 — parking brake lever; 5 — quadrant; 6 — parking brake indicator switch; 7 — adjusting gaskets; 8, 9 — drive ties; 10 — brake shoe; 11 — expansion cam; 12 — adjusting lever; 13 — coupling bolt

used for controlling the trailer brakes, and the lower one, for controlling the truck brakes. The valve is mounted on the frame left side member under the cab.

When the parking brake is applied, lever 4 compresses the equalizing spring, so slackening its counter action and the upper cylinder piston shifts to the left. Valve 17 opens, air is exhausted out of the trailer brake main pipeline and the trailer is braked. In this case no air is fed in the truck brake main pipeline.

When servicing the brake valve, clean it from dirt, test for tightness and check for performance.

The brake valve lower chamber houses adjusting ring 22.

If the truck tows an empty trailer, the adjusting ring must be set in *П* position, in this case advance of trailer brake application is minimum relative to the truck brake application. If the truck tows a heavily loaded trailer and the road train mass is of a considerable value, the adjusting ring must be set in *Р* position. Position *П* corresponds to the normal adjustment of the valve, thus ensuring sufficiently correct performance of the brake in normal conditions.

When the brake pedal goes fully (until it thrusts the cab floor), the maximum air pressure in the system after the brake valve must be equal to that in the reservoir.

Adjust the pressure in the trailer main pipeline by nut 9. Check that the pressure is about 440—530 kPa (4.8—5.3 kgf/cm²) if the pressure in the truck air reservoirs is of the maximum value. Before readjusting, turn out stop screw 6.

For readjusting the brake pedal free travel, check that the gap is within 15—25 mm by changing the length of the rod 16 (see Fig. 68). The control lever should be pressed against the brake valve upper cover stop. Determine the initial gap as the force increases. The brake pedal total travel is 130—145 mm.

When installing the brake valve, the parking brake control (Fig. 7) is connected with the brake valve lever by means of tie 2.

When applying the parking brake of the truck simultaneously brake valve lever 1 is turned and the trailer is braked.

To ensure proper operation of the parking brake:

- adjust a gap between lever 1 and brake valve control tie 2 clamp.

The gap should be 2 mm, maximum, no interference is to be located.

Design, maintenance of the service brake, compressor, air boosters with brake master cylinders, and also troubles in the brake system and the lists of jobs carried out for servicing all correspond to the description given in respective sections of this Manual.

Внешторгиздат. Изд. № 1585СО.
Автомобиль Урал-4320-01
Руководство по эксплуатации
на англ. яз.
С.-У. Зак. 253.