ZETOR

FORTERRA

95
105
115
125

1/2009

Operator's manual

ZETOR

This Operator's Manual for the Zetor Forterra tractors, which we are presenting to you will help you to become familiar with the operation and maintenance of your new tractor.
Although many of you have rich experience with the operation of other tractors, please, read the information contained in this Operator's Manual very carefully.
In the Manual you will find a lot of new information and get a perfect overview of how to use the tractor with maximum efficiency during various kinds of work.
If you observe the rules of tractor operation and maintenance and driving safety, your new tractor will become your reliable and long-term friend.
The manufacturer of the tractor wishes you thousands of hours of satisfactory work.

ZETOR
Brno

The technical specifications and information about the design, equipment, material and appearance are valid at the time of print. The manufacturer reserves the right to implement changes.

CONTENTS

The Operator's Manual deals with the description, operation and maintenance of the standard version and accessories that the tractor may be optionally equipped with.
The service cheque book for tractors is not part of the Operator's Manual, but forms a separate booklet that is handed over to you at the purchase of your new tractor.

ZETOR FORTERRA TRACTORS

Zetor Forterra 95 ..... 66 kW
Zetor Forterra 105 ..... 74 kW
Zetor Forterra 115 ..... 81 kW
Zetor Forterra 125 ..... 90 kW

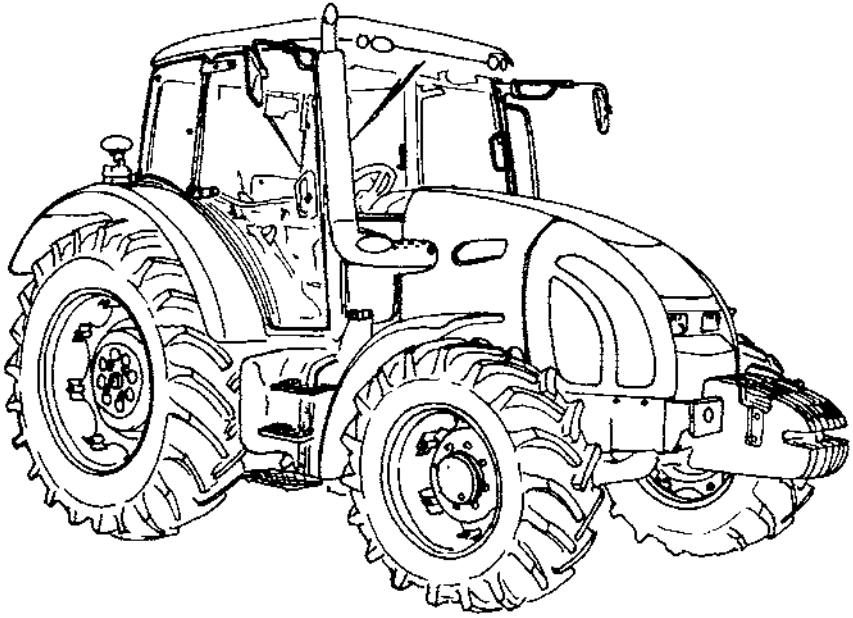

LOCATION OF SERIAL NUMBERS

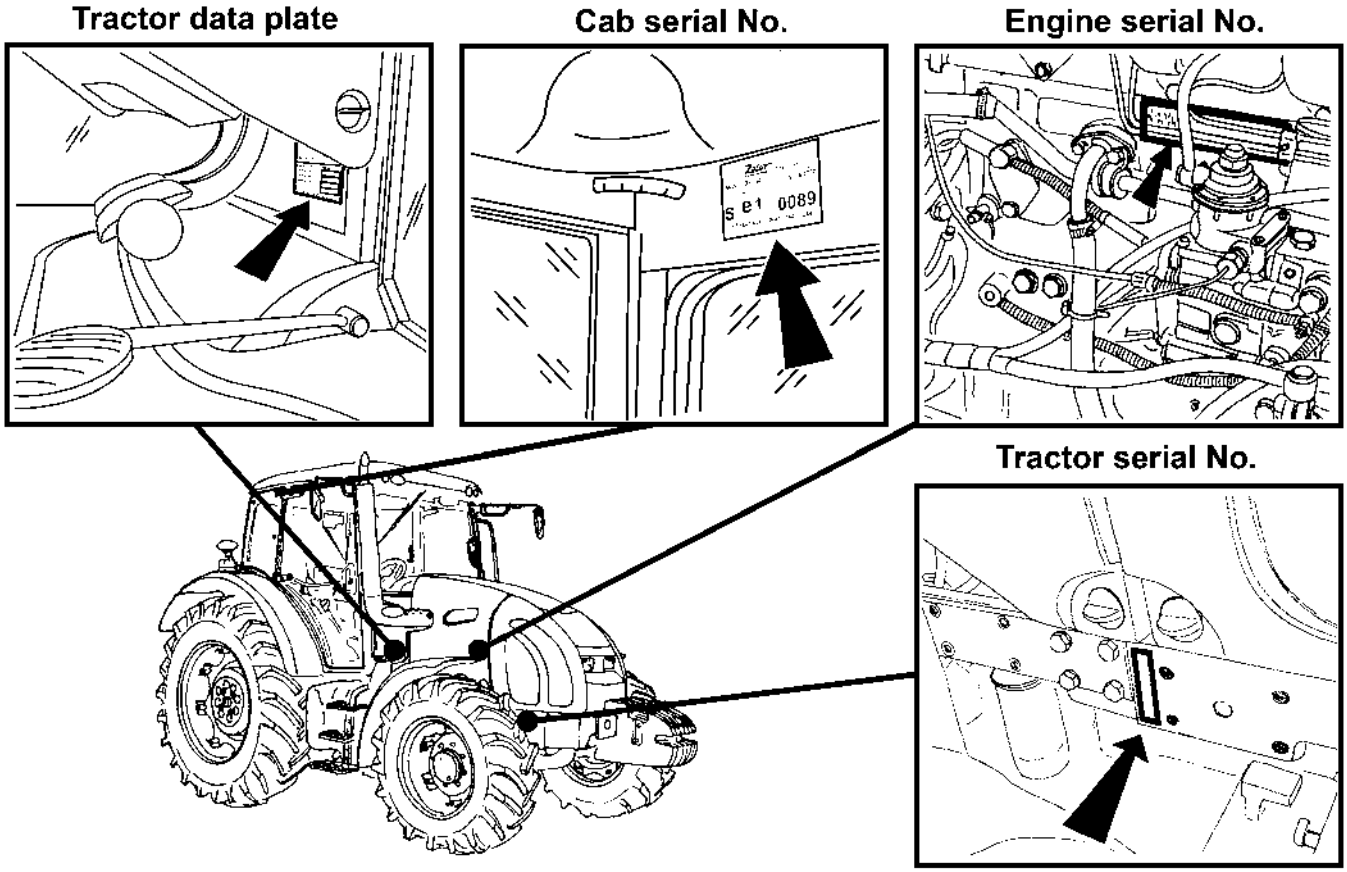

XH154

LOCATION OF SERIAL NUMBERS

When ordering spare parts and within all written and oral communication always specify the data of your tractor that should be written in the frames below.

Tractor type	Tractor serial number	Engine serial number

Zetor Forterra 95
Zetor Forterra 105
Zetor Forterra 115
Zetor Forterra 125

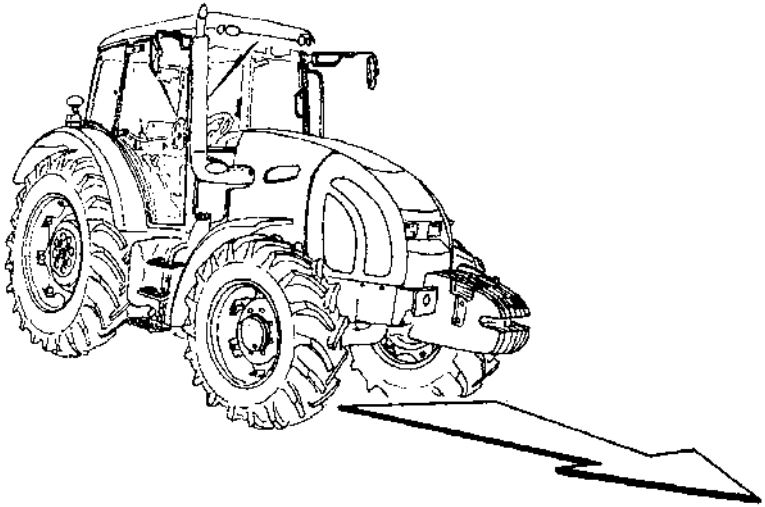

XF-02-101

The “right”, “left”, “front” and “back” indications refer to the driving direction of the tractor.

The manufacturer reserves the right to implement changes of the design and options during the production to improve the features of the tractor.

SAFETY INSTRUCTIONS FOR USERS

Please, pay increased attention to the parts of the Operator's Manual that are marked with this symbol.

This symbol accompanies all important warnings that concern operation safety.
Observe these instructions and be extremely careful in these cases!
Inform your colleagues and other users about these warnings.

Carefully study the chapters marked with this symbol before starting to perform operation, repairs and adjustments of your tractor.

This symbol identifies all important information concerning operation, adjustment and repairs of the starter motor.
Observe these instructions and be extremely careful in these cases!

This symbol marks parts of the Operator's Manual concerning environment protection. Or possibly sections describing handling of dangerous waste.

* This symbol refers to optional tractor accessories installed by the manufacturer on the customer's request.

*Accessories that are not installed by the manufacturer in the standard way or * optionally on the customer's request (in the production plant) cannot be subject to a claim.*

GENERAL SAFETY REGULATIONS

1. The tractor may only be operated by a trained person that has a valid driving licence and has been thoroughly acquainted with the operation and safety rules.
2. Besides the safety instructions mentioned in the Operator's Manual you are obliged to respect generally valid safety and traffic rules of the country where the tractor is used.

PROPER CLOTHING

3. Do not wear loose clothing and free flying long hair.
4. During all work use suitable (prescribed) means of personal protection (working boots, gloves, goggles, etc.)

STARTING THE ENGINE

5. It is not permitted to start the engine by driving down a slope.
6. The tractor may be put in motion to start the engine with the use of another tractor or another vehicle with the use of a towing bar only.
7. Only start the engine from the driver's seat with the clutch pedal fully depressed.

Life hazard when starting by means of short-circuiting the starter terminals!

8. The key in the switch box must be in the "I" position.
9. When heating the engine with the * electric heater first plug the power supply cord to the heater and only then to the electric mains. After the end of heating first disconnect the heater from the electric mains.

Caution! Electric shock hazard!

DRIVING OPERATION

10. Hoses of the hydrostatic steering, brakes and fuel system must be checked and replaced immediately if any signs of damage are found. These are some examples of hose damage signs: - cracks on the hose surface, releasing of pre-tensioning of hose connection (which can be verified by easy removal of the hose from the connection) and mechanical damage of the hose. Hoses with indicated service life must be replaced immediately after the expiration of the service period.

11. If the tractor uses bio-fuel, the fuel system must be equipped with REP hoses (the fuel system is equipped with REP 6 hoses by the manufacturer).

12. The brakes and steering must be in the perfect condition all the time.

13. During driving on roads with trailers and tools the brake pedals must be connected with a latch.

14. Driving downhill without an engaged gear is forbidden.

15. Pay special attention when driving on a slope and muddy, sandy, icy or uneven ground.

16. Observe the maximum prescribed slope gradient of 12°.

17. Respect the total permissible weight of the tractor and trailer specified on the data plate of the tractor or on the rear wheel mud-guard.

18. Do not use the differential lock when driving into a bend.

19. It is forbidden to get into and out of a moving tractor.

20. When driving with machines attached to the rear hitches the load of the steered axle must not drop below 18 % of the current weight of the set.

21. When driving the tractor with agricultural machines attached to the front three-point hitch, reduce the driving speed to 20 km/h.

22. During aggregation of Zetor Forterra tractors with machines and implements with high tensile resistance when the engine speed drops and the engine tends to stall, the 1R, 2R reduced gears must not be used for the work with these machines (risk of shaft twist-off). .

TRANSPORTATION OF PERSONS, OPERATION

23. The number of persons transported by the tractor must not exceed the number specified in the technical certificate of the tractor.

24. Persons that are not authorized to work with the attached implement must not stand between the tractor and the hitched machine (implement).

25. Before putting the tractor in motion make sure there is no person or obstacle in the driving direction.

26. Observe the prescribed slope gradient, which has the value of 12° for the Zetor Forterra 95, 105, 115, 125 tractors.

RECOVERY, PUSHING

27. To recover a tractor that has sunk in mud use a tow bar or rope attached to the front hook.

⚠ ***Never use chains! Rupture of the chain represents a danger of death!***

28. During recovery it is dangerous to stand near the towing rope.

29. It is prohibited to use the tractor axles (individual wheels) as a winch for releasing a sunken tractor.

30. The front hook should be only use to recover the entire tractor, i.e. without any trailer or another attached implement.

31. Never recover the tractor with reduced gears engaged.

32. When pushing other vehicles (trailers, implements, etc.) with the tractor never insert free wooden blocks or bars between the tractor and the pushed vehicle.

LEAVING THE TRACTOR

33. Do not park the tractor with an attached implement in the lifted position.

34. Before leaving the tractor do not forget to brake the tractor with the parking brake (by engaging a gear). Remove the key from the switch box and lock the cab.
35. In the case of a tractor equipped with reversing shift the reversing lever to the forward position.
36. Before leaving the tractor with the engine running brake the tractor with the parking brake.
37. To get out of the tractor normally use the left side of the tractor. Look around to see whether a vehicle is coming that could endanger your safety during getting off and only then open the door.
38. When leaving the tractor use the steps and handles. Pay increased attention in the area of the shifting lever and the manual throttle lever as well as the upper step.

WITH STOPPED ENGINE ONLY

39. All work connected with refuelling, cleaning, lubricating and adjusting the tractor or attached implements may only be performed with the engine and moving parts of the tractor stopped except functional checks of the brakes, hydraulic system and charging.
40. Before removing the side plates of the hood it is always necessary to stop the engine. The tractor engine can only run in a closed building or room if sufficient ventilation is ensured. Exhaust gases are harmful for health.

FIRE PREVENTION PRINCIPLES

41. Refuel the tractor best after the end of work and with the engine stopped.
42. Do not refill fuel up to the top of the fuel tank in summer. Wipe spilt fuel immediately.
43. Do not refuel the tractor near open flame and do not smoke.
44. Do not smoke and do not use open flame when inspecting the battery electrolyte level.
45. Make sure that fire safety instructions are strictly observed in environments with an increased danger of fire (hay-lofts, straw-stacks, etc.).
46. The tractors are not equipped with a fire extinguisher from the production plant.

HEALTH AND ENVIRONMENT PROTECTION

47. The tractors are not equipped with special filters of air aspirated to the cab. Therefore, they are not designed for work with aerosols and other harmful substances.
48. Coolant, brake liquid, kerosene, diesel fuel, mineral oil and other oil products that are used for the operation and maintenance of the tractor may cause various skin disorders in case of direct contact with your skin and can irritate mucous membranes, eyes, the digestive system and upper respiratory ways. Some of them may even cause systemic poisoning when swallowed.
49. Persons that handle oil products are obliged to strictly observe safety and hygienic regulations, use suitable means of protection and work in well-ventilated rooms.

WORKING WITH OIL PRODUCTS

50. After the end of work or before a meal you should wash yourself with a mild agent and treat your hands with a suitable ointment or cream.
51. When connecting and disconnection quick-couplers of the hydraulic circuits use any piece of cloth to remove residual oil remaining in the socket or on the plug of the quick-coupler.

WASTE DISPOSAL

52. When disposing of the tractor or its parts (incl. operation liquids) after the end of their service life you must observe relevant provisions of valid acts and implementation directives of these acts of the country where the tractor is used. The last seller of the tractor is obliged in accordance with the Waste Act to inform the consumer - during the sale of the tractor - about the way of collection of some used parts of the tractor. This is the case of oil and other operation liquids, batteries and tyres. These used products must be received from the consumer without any obligation of the consumer to pay for this service.

PREVENTIVE DAILY MAINTENANCE

53. Perform this maintenance daily or after every 8 - 10 hours of operation at the latest.

SAFETY CAB

54. If the protective frame of the safety cab is damaged by corrosion, an accident or otherwise, the safety cab must be replaced.

AIR-CONDITIONING

55. Disassembling, turning or otherwise handling the screw union of the air-conditioning system is not allowed in any case. Sudden leak of the coolant may occur, causing quick local cooling. Contact or freezing of components in hands may cause serious damage of some tissues.

56. The air-conditioning system is equipped with quick-couplers that make it possible to separate the cab from the tractor body if necessary without any coolant leak. Entrust interventions into the air-conditioning system to a specialized repair shop.

ELECTRIC INSTALLATION

57. *No additional interventions into the electric installation (connection of other electric appliances) are permissible due to its possible overloading!*

58. The values of the electric installation are:

Nominal voltage 12 V =
Grounded minus pole (-) pole

Using starting trucks or auxiliary power supplies with a different voltage or polarity may cause serious failures of the tractor.

59. When handling the battery you must pay increased attention and avoid short-circuits. In tractors equipped with a battery disconnector switch the disconnector off when handling the battery.

60. Zetor Forterra tractors must not be operated with a disconnected battery as this may lead to a serious failure of the tractor.

PREVENTIVE DAILY MAINTENANCE

Perform this maintenance daily or after every 8 - 10 hours of operation at the latest.

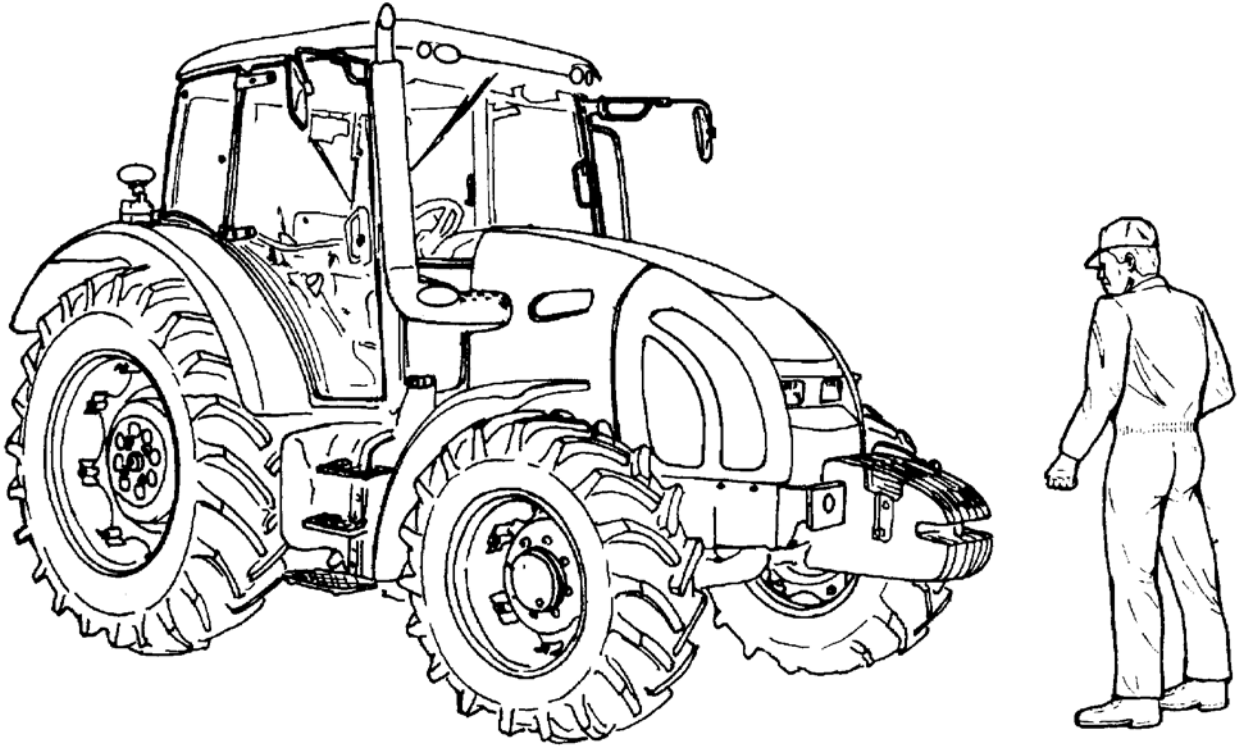

XF_02_148

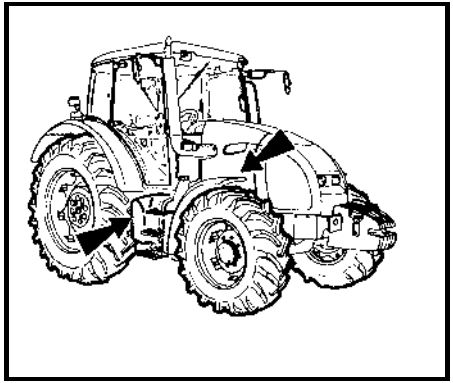

F_02_192

FUEL SYSTEM LEAKS

Check the fuel system for leaks, including the fuel tank. Repair any leaks immediately. The hole for draining dirt from the fuel tank is found in its bottom.

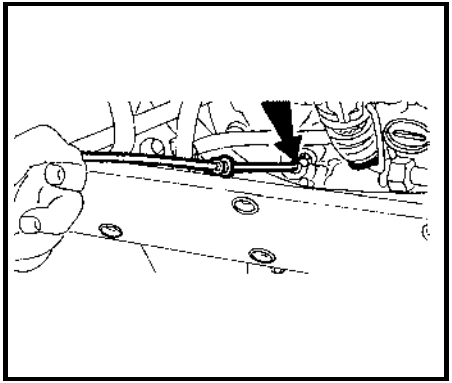

XF_02_193

ENGINE OIL LEVEL

After unscrewing and removing the oil dip-stick check the oil quantity in the engine and then check the connection of the engine lubrication system for leaks. Maintain the oil level between the dip-stick marks.

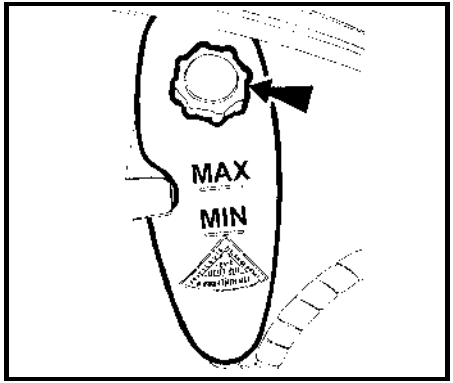

F_02_3a1

COOLING SYSTEM

Check the connections of the engine cooling system for leaks and the coolant quantity in the expansion tank. Replenish the missing quantity up to the upper mark indicated MAX. The minimum acceptable cooling liquid level is indicated by the MIN mark.

⚠ *Only release the overpressure plug when the coolant has cooled down! There is a danger of scalding!*

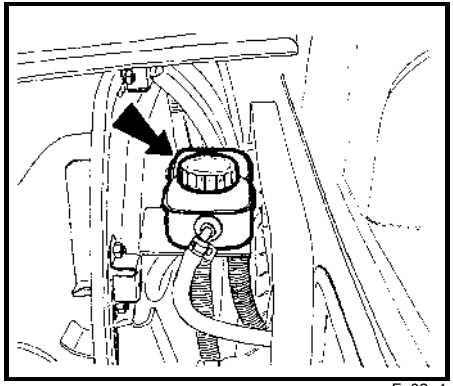

F_02_4

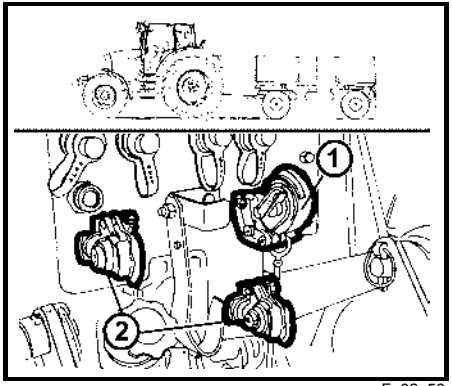

F_02_56

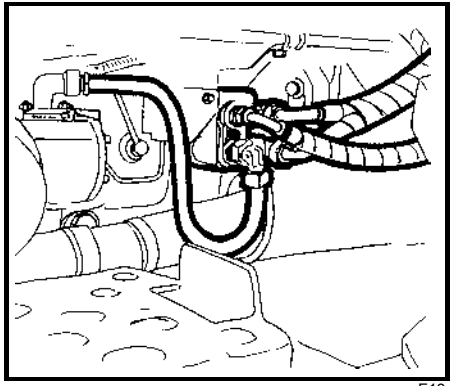

F13

LIQUID BRAKES

Check the liquid brakes for leaks as well as the liquid control of the clutch and the braking liquid level in the expansion tank. Maintain the brake liquid level in the range of 3/4 of the tank content (max. level) and 1/2 of the tank content (minimum level).

TRAILER AIR BRAKES

Check the air system of the brakes for leaks and the efficiency of the tractor brakes with a trailer (see the Maintenance instructions chapter; the Checking the air systems for leaks section of this Operator's Manual).

TRAILER HYDRAULIC BRAKES

Check the hydraulic brakes of the trailer for leaks.

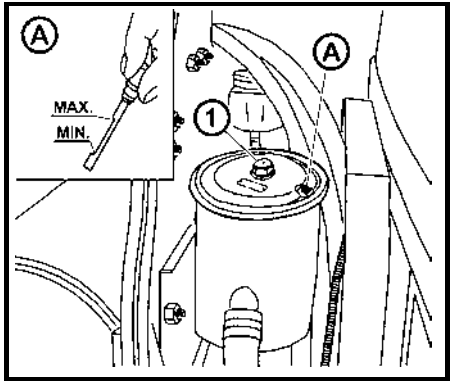

D402

HYDROSTATIC STEERING

- Check the oil level in the hydrostatic steering tank.
- Check the tightening of screws and nuts of the steering rods and levers.
- Check the condition of all the hoses of the hydraulic steering circuit for damage and for oil leaks.

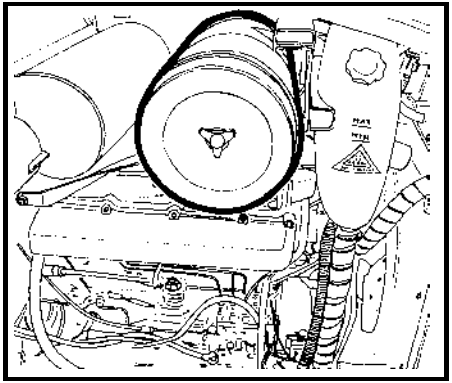

F_02_6a

AIR CLEANER

If the air cleaner is heavily clogged with dirt, this condition is indicated by a sensor that lights up an indicator on the dashboard.

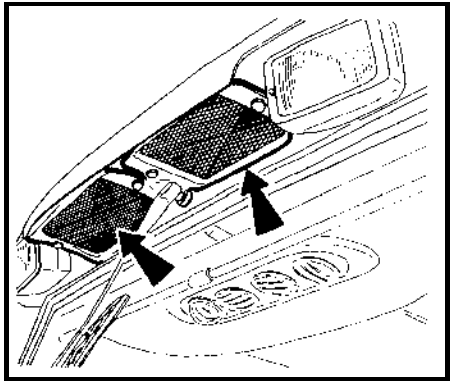

F_02_9

CAB FILTRATION

Check and if necessary clean the cab ventilation air filters installed in the front overhang of the roof.

The filter exchange interval depends on the dustiness of the working environment.

Partial regeneration can be performed by beating out or blowing with compressed air.

Do the cleaning or replacement of the filter elements after removing the covering grills in the roof overhang.

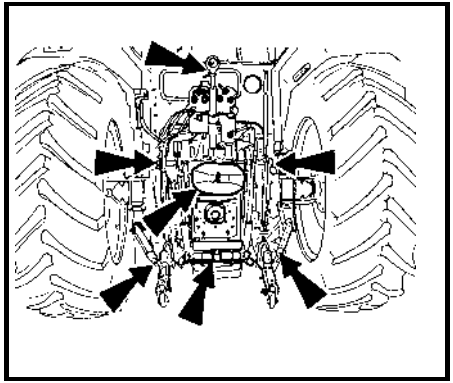

F18

HITCHES

Check the condition of the hitching and attachment systems of the tractor and trailer.

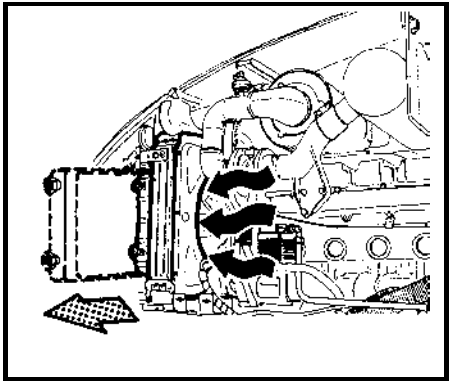

F_02_100

AFTER WIRK WITH FRONT IMPLEMENTS AND IN CASE OF COOLER CLOGGING

After work with front implements:

- Check the connections of the external hydraulic circuit of the control of the front three-point hitch for leaks

Clogging of the coolers:

- Remove the side plate of the hood.
- Release and slide the cooler to the left side of the tractor.
- Clean the front walls of the engine (gearbox, air-conditioning condenser) cooler with compressed air (blow air in the direction from the engine).
- Remove residual dirt from the space under the hood so that it should not be suctioned again.

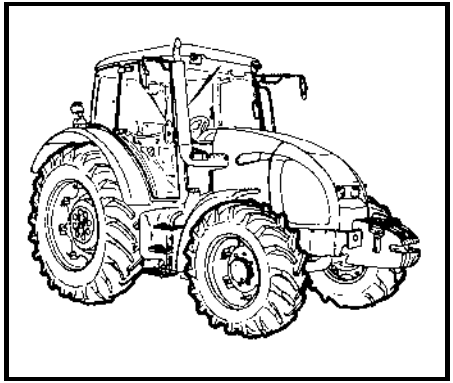

F_02_7

TYRES AND WHEELS

Check the air pressure in the front and rear tyres. Depending on the character of work adjust the pressure to the recommended value. Check and if necessary retighten the bolts of the front and rear wheels (the rim / disc and disc / wheel shaft connection).

⚠ *Never drive with loose wheel bolts!*

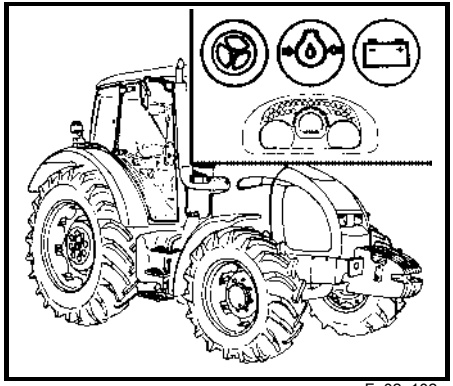

F_02_102a

SHORT FUNCTIONAL TEST

After starting the engine check whether the hydrostatic steering failure, engine lubrication and charging indicators have gone off.

Verify the function of the hydraulic steering circuits and check them for leaks.

ACQUAINTANCE WITH THE TRACTOR

The tractor user is obliged to get acquainted with the recommended procedures and instructions for safe operation of the tractor in advance. It is too late to do so during operation!

ACQUAINTANCE WITH THE TRACTOR

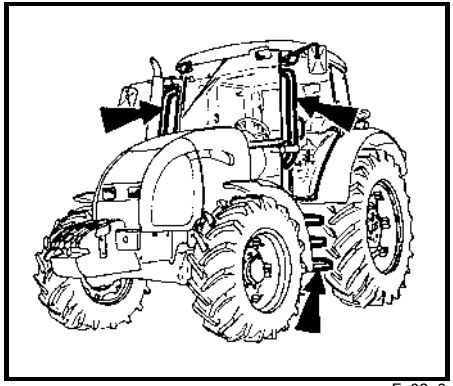

F_02_8

SAFETY CAB

Normally use the left side of the tractor to enter and leave the cab. When entering and leaving the cab use the three-stage steps and handles.

Pay increased attention in the area of the shifting lever and the manual throttle lever.

The safety cabin is equipped with tinted glass as standard.

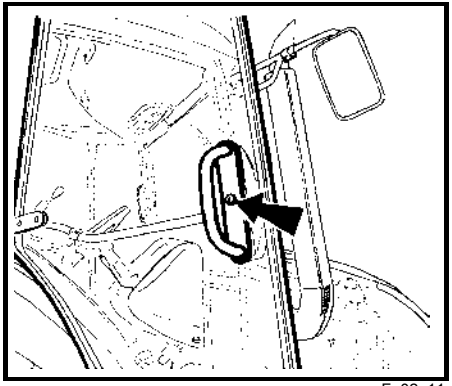

F_02_11

DOOR OPENING FROM THE OUTSIDE

The cab doors can be locked from the outside.

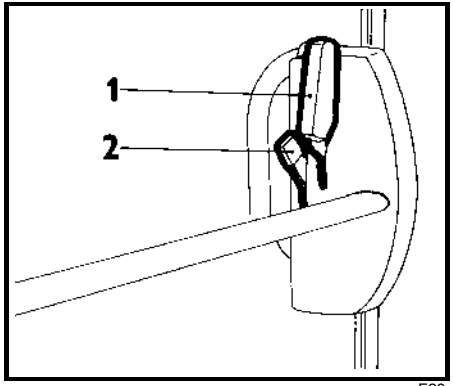

F23

DOOR OPENING FROM THE INSIDE

1.Lever for door opening from the inside
2.Lever for lock opening from the inside
The door is held in the fully open position by a gas strut.
Driving with an open door is not recommended as the door may get damaged.

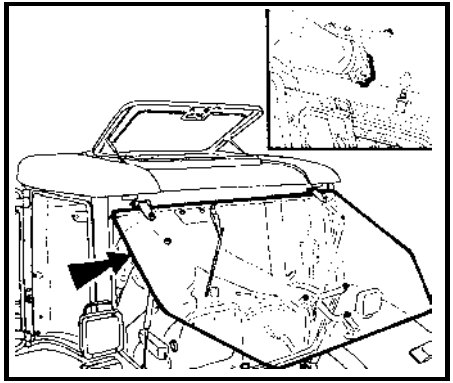

F24

REAR WINDOW

The rear window is equipped with a handle and in the open position it is held by gas struts. The rear window may be * heated.

We recommend you to latch the window in the closed position when driving on an uneven ground - danger of cracking of the window. Before you start work with implements attached to the rear three-point hitch make sure there is no danger of collision between the attached implement in the position of maximum lift of the three-point hitch and the open rear window. In case of interference we recommend you to work with the window closed.

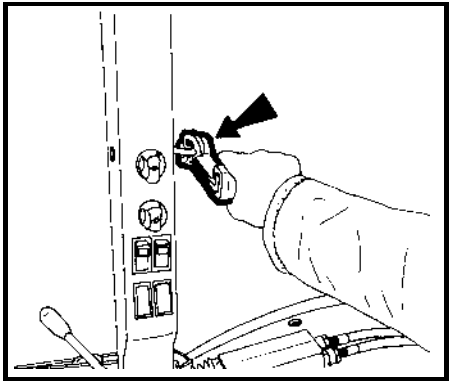

F25

SIDE WINDOW

The window is secured in the partly open position with a plastic latch.

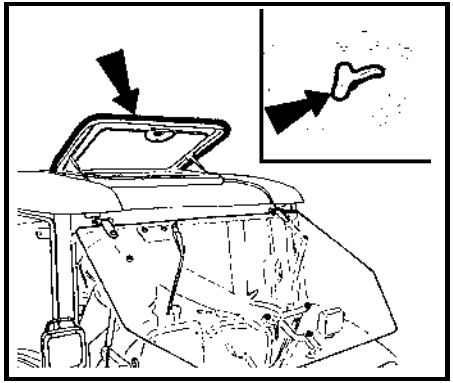

F_02_14

*TILTING LID

It can be opened by partial turning of the locking lever and half-opening.

By opening the tilting lid you will increase the total height of the tractor. Therefore, always close the lid when passing through or parking in places with a lowered profile.

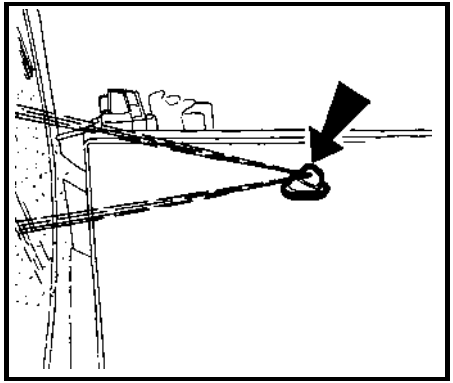

F28

WASHER NOZZLE

The nozzle is adjustable with a needle with the max. thickness of 0.8 mm.

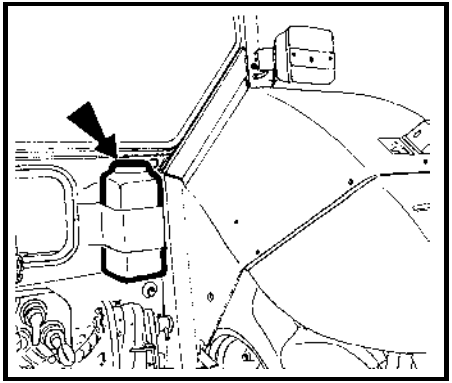

F_02_152a

WASHER TANK

The washer tank is located on the outer rear wall of the cab.

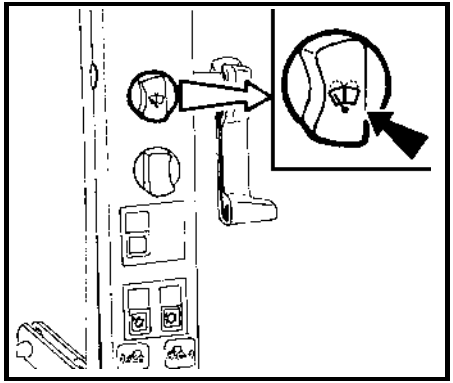

F_02_137

WASHER CONTROL

The windshield washer is activated by pressing of the selector of the front two-speed wiper located on the right pillar of the cab. The maximum period of uninterrupted operation of the washer pump is 20 s.

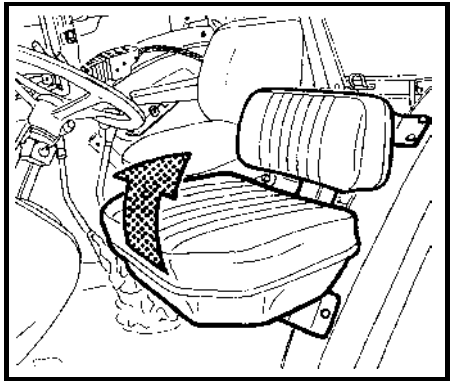

F_02_13

PASSENGER'S SEAT

Passenger's seat is tilting and is situated on the left cab fender.

Note: To facilitate access to the driver's seat you can tilt the passenger's seat upwards.

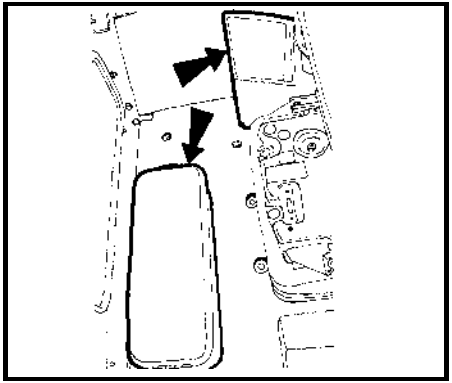

F31

STORAGE COMPARTMENT AND TOOL BOX

The storage compartment is located at the left side of the driver's seat.

The toolbox is positioned in the rear part of the cab behind the driver's seat.

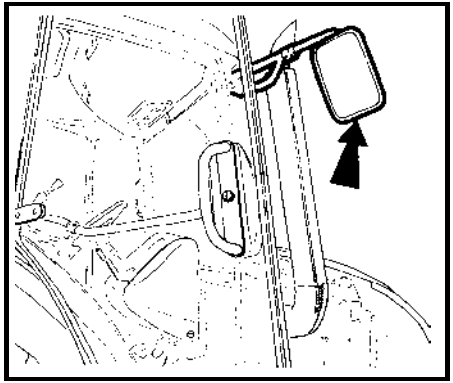

F_02_12

REARVIEW MIRRORS

Before driving or starting work adjust the rearview mirrors to be able to see the entire road or the working field.

The rearview mirrors may be * heated.

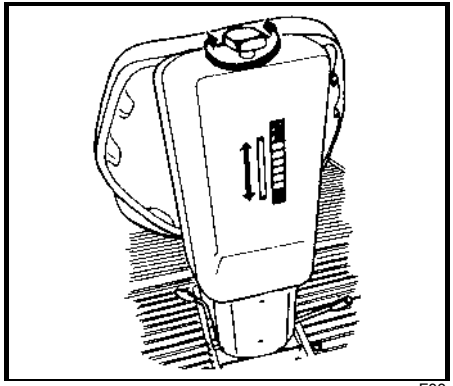

F33

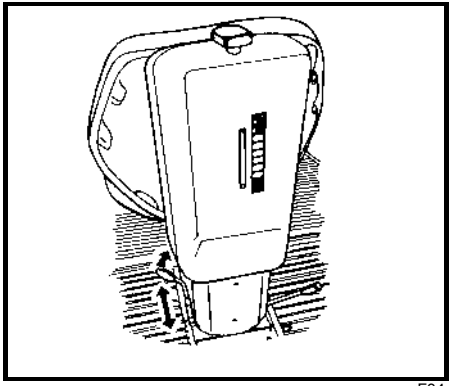

F34

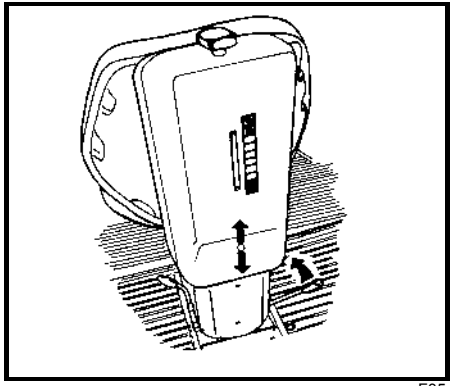

F35

MARS SVRATKA DRIVER'S SEAT

ADJUSTING THE SEAT FOR THE DRIVER'S WEIGHT

The seat suspension is adjustable for the driver's weight from 50 to 120 kg. The adjustment is performed by turning a square handle. The weight adjustment indicator is located in the recess of the rear seat cover. The spring stroke is 120 mm.

⚠ *Do not adjust the seat when driving. Danger of accident!*

LONGITUDINAL ADJUSTMENT OF THE SEAT

You can adjust the seat longitudinally with the left lever in the range of ± 75 mm (11 positions).

VERTICAL ADJUSTMENT OF THE SEAT

The seat is adjusted vertically with the lever at the right-hand side in the range of ± 30 mm (3 positions).

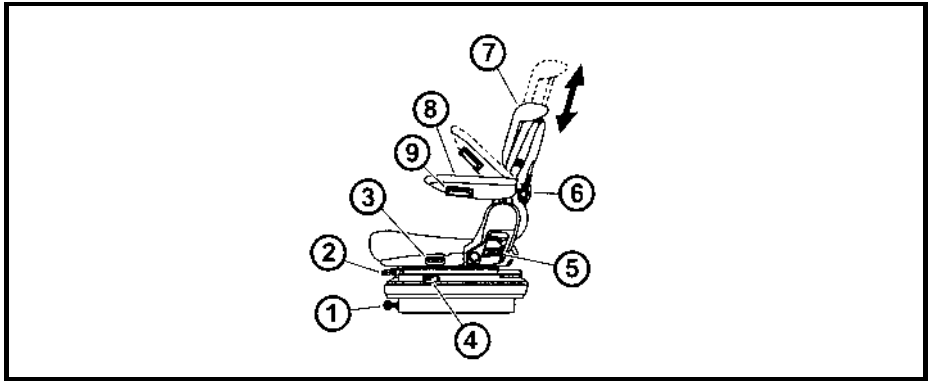

D104

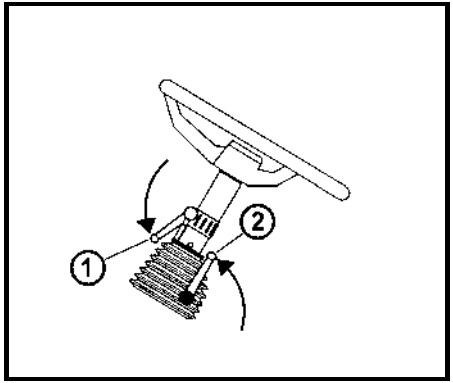

F205

GRAMMER MAXIMO DRIVER'S SEAT

1- Seat suspension adjustment control by the driver's weight (adjustment by turning, direction in accordance with the pictogram on the seat bellows).
2- Longitudinal adjustment lever of the seat (located at the right side of the seat)
3- Seat turning control (the seat can be turned by 20° to both the sides)
4- Seat vibration absorption control (by flipping the control to the front you will select the floating position of the seat)
5- Backrest angle adjustment control
6- Backrest shape adjustment control
7- Height-adjustable backrest (by pulling or pushing in the arrow direction you can adjust it in the range of 170 mm)
8- Tilting armrest
9- Armrest adjustment control (by turning the control you can adjust the height of the armrest)

GRAMMER S DRIVER'S SEAT

It only uses positions 1, 2 and 5.

ADJUSTABLE STEERING WHEEL

The tilting steering column allows variable angle and height adjustment of the steering wheel.

Steering wheel height adjustment

The adjustment is done by extending or retracting the steering wheel after releasing the lock by turning the lever (1) in the arrow direction. After setting the steering wheel lock the lever (1) by tightening against the arrow direction.

Steering wheel angle adjustment

The adjustment is done by tilting the steering wheel after releasing the lock by turning the lever (2) in the arrow direction. After setting the steering wheel lock the lever (2) by tightening against the arrow direction.

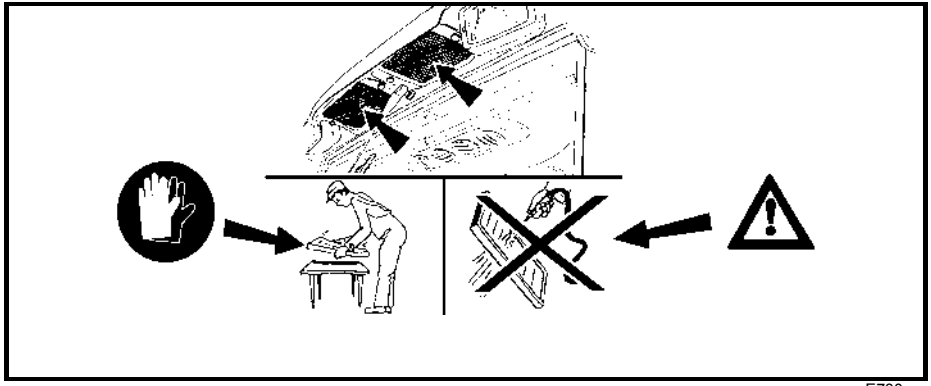

E730a

***AIR FILTER WITH ACTIVE CARBON**

Filters with active carbon are installed instead of the standard dust filter and they are replaced in the same way as the normal filters. The filter must be inserted with the white side towards the grill. You will find the installation instructions in the “Maintenance instructions” chapter.

The filter is only used during spraying of pesticides; then it must be replaced with a paper filter again as flying dust would clog the carbon filter in a very short time.

During its use the recirculation control must be in the position of “air suctioned from the outside”

The fan control must be in the “maximum” position.

- *WARNING: The filter does not provide complete protection from toxic substances*
- *When handling the filter wear protective gloves*
- *Do not clean or blow the filter with compressed air.*

***DANGER:** Replace the active carbon filter every 200 hours or 36 months (the production date is printed on the filter). If you feel the smell of pesticides in the cab, replace the filter immediately and have the cab sealing checked. Used filters must be disposed of in specialized collection centres.*

When pesticides are sprayed and a heating filter with active carbon is used, the recirculation control must be in the “air suctioned from the outside” position and the fan control in the “maximum” position to create overpressure in the cab.

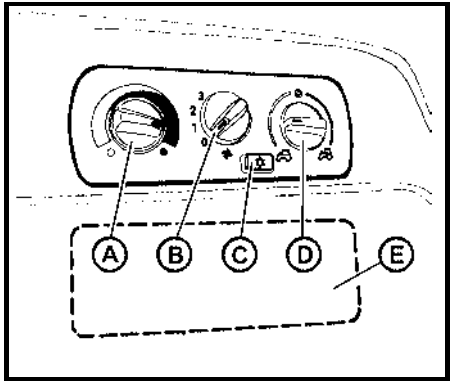

F_02_15

CONTROL PANEL OF HEATING, *AIR-CONDITIONING, *RADIO

A -Heating valve control
B -Fan control
C -Air-conditioning switch
D -Control of air circulation in the cab
E -Space for additional radio installation

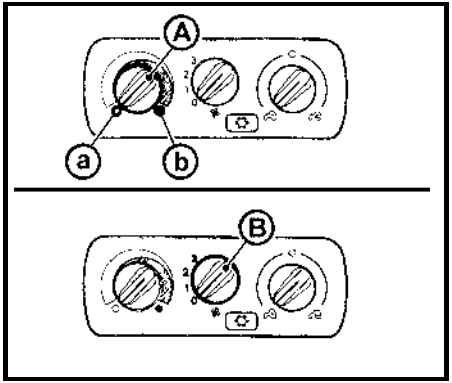

F_02_16

HEATING VALVE CONTROL (A)

a -Heating valve closed
b -Heating valve open

FAN CONTROL (B)

0 -Fan off
1 -Slow fan speed
2 -Medium fan speed
3 -Maximum fan speed

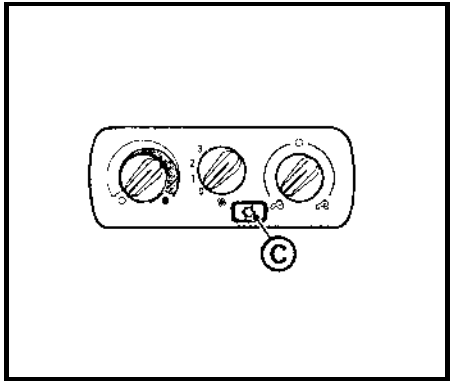

F_02_17a

***AIR-CONDITIONING SWITCH (C)**

The air-conditioning system is switched on and off with the switch with the snow-flake symbol (C).
By pressing the switch you will put the air-conditioning system in operation (the snowflake symbol is lit).
You can switch off the air-conditioning system by pressing the switch again (the snowflake symbol is off).

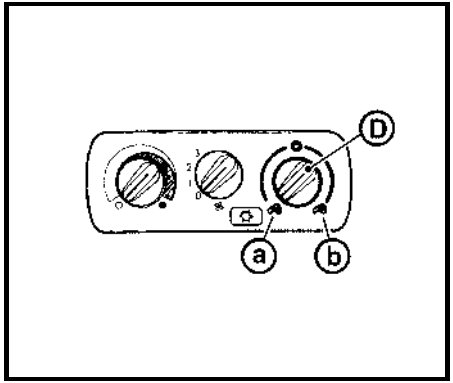

F_02_17b

CONTROL OF AIR CIRCULATION IN THE CAB (D)

a -Surrounding (external) air is suctioned to the cab via filters - air suctioning from the cab is closed.

b -Air is suctioned from the inside of the cab and blown into the cab again (air recirculation fast quick adjustment of temperature in the cab).

⚠ *In this position the air inlet from the outside of the cabin is completely closed and in the cabin there is no overpressure that prevents penetration of unfiltered air to the cabin!*

Do not use this position of the control during working operation of the tractor!

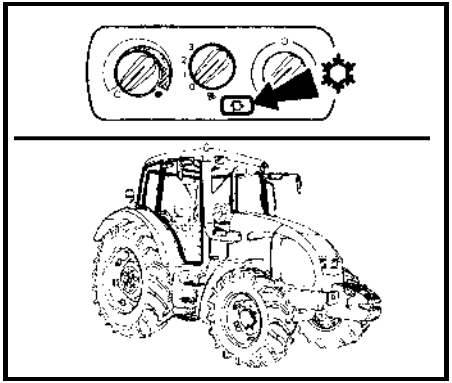

F_02_52

PROPER FUNCTION OF THE HEATING AND AIR-CONDITIONING SYSTEM

To ensure proper functioning of the heating or air-conditioning system it is necessary to create overpressure in the cab. Therefore, we recommend you to close all the windows, doors and tilting lid of the cabin.

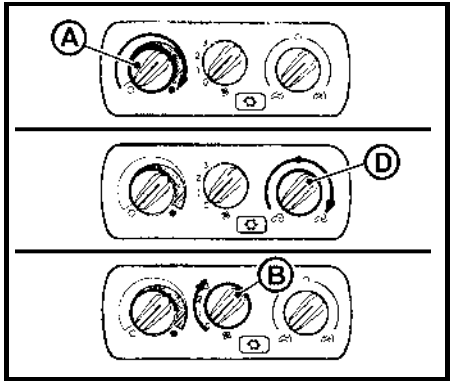

F_02_18a

FAST HEATING OF THE CAB SPACE

Proceed as follows:

1 -Turn the heating valve control (A) to the right position (heating valve fully open).

2 -Set the control of air circulation in the cab (D) to the internal circulation position.

3 -Use the fan control (B) to select the corresponding fan speed (position 1, 2, 3)

4 -Set the outlets to the required angle to avoid direct blowing of air to the persons in the cab.

5 -After heating of the cab space set the control of air circulation in the cab (D) to the position of suctioning external air - see fig. F_02_17b, position (a).

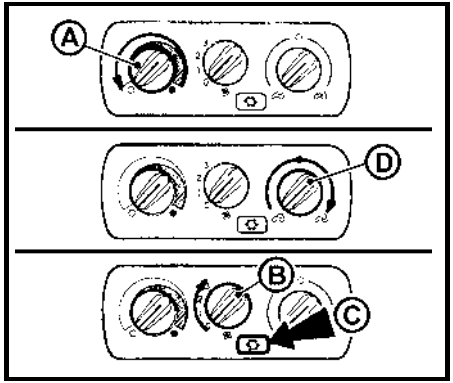

F_02_18

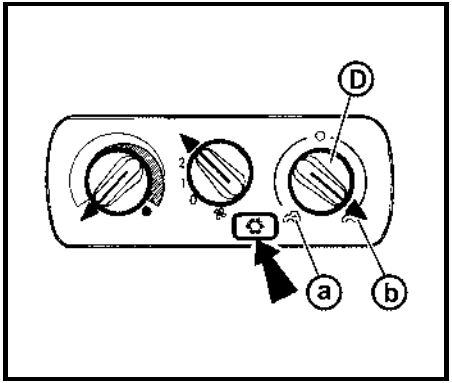

F_02_19

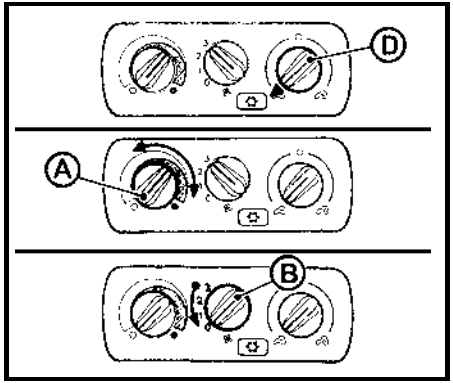

F_02_20

QUICK COOLING OF THE CAB SPACE

Proceed as follows:

6 -Turn the heating valve control (A) to the left position.

7 - Set the control of air circulation in the cab (D) to the position of suctioning external air.

8 -Use the fan control (B) to select the corresponding fan speed (position 1, 2, 3)

9 -Use the switch (C) to switch on the air-conditioning system.

10 -Set the outlets to the required angle to avoid blowing of air directly to the persons in the cabin (possible occurrence of an illness due to intensive cooling of body parts).

HEATING OR AIR-CONDITIONING OPERATION DURING WORK OF THE TRACTOR

When internal air circulation is on, the fresh air inlet is closed and the air in the cab space may be breathed up by the operators. This situation may cause the feeling of tiredness and further due to overpressure loss in the cab dust may penetrate to the cab.

Note: During work set the switch (D) in accordance with individual requirements to a temperature in a position between (a) and (b) so that the fan can suction air from the outside via filters.

IMMEDIATELY AFTER COOLING DOWN THE CAB

Immediately after cooling of the cab and reduction of the internal temperature to the required value we recommend you to:

–Perform smooth regulation of air temperature with the air-conditioning on by partially opening the heating valve (A). At this setting the air entering the cabin from the outlets is not dried so intensively.

–You can also smoothly regulate the air temperature with the air-conditioning on by reducing the fan output by switching the control (B) to position 1 or 2.

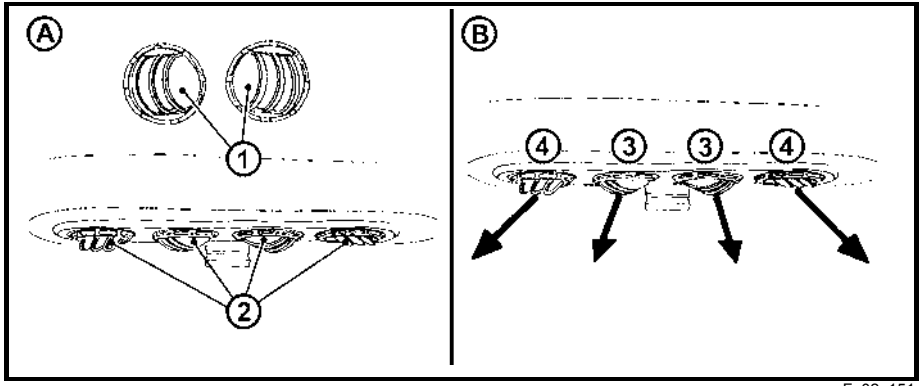

F_02_151

HEATING AND AIR-CONDITIONING OUTLETS (A) (∗RADIO SPEAKERS)

Adjustable outlets of heating (2) and *air-conditioning (1)
Radio speakers are only installed in case of preparation for the *radio installation.

FRONT WINDSHIELD (B) DEFROSTING

To ensure quick defrosting of the front windshield direct the central heating outlets (3) under the angle of approx. 45° towards the windshield. Direct the side outlets (4) under the angle of approx. 45° to the cab corners.
After defrosting of the front windshield direct the side outlets to the side glasses of the doors as necessary and gradually defrost them. After defrosting direct the outlets in such a way that the air should not be blown directly to the driver, but down to the driver's legs.

ACQUAINTANCE WITH THE TRACTOR

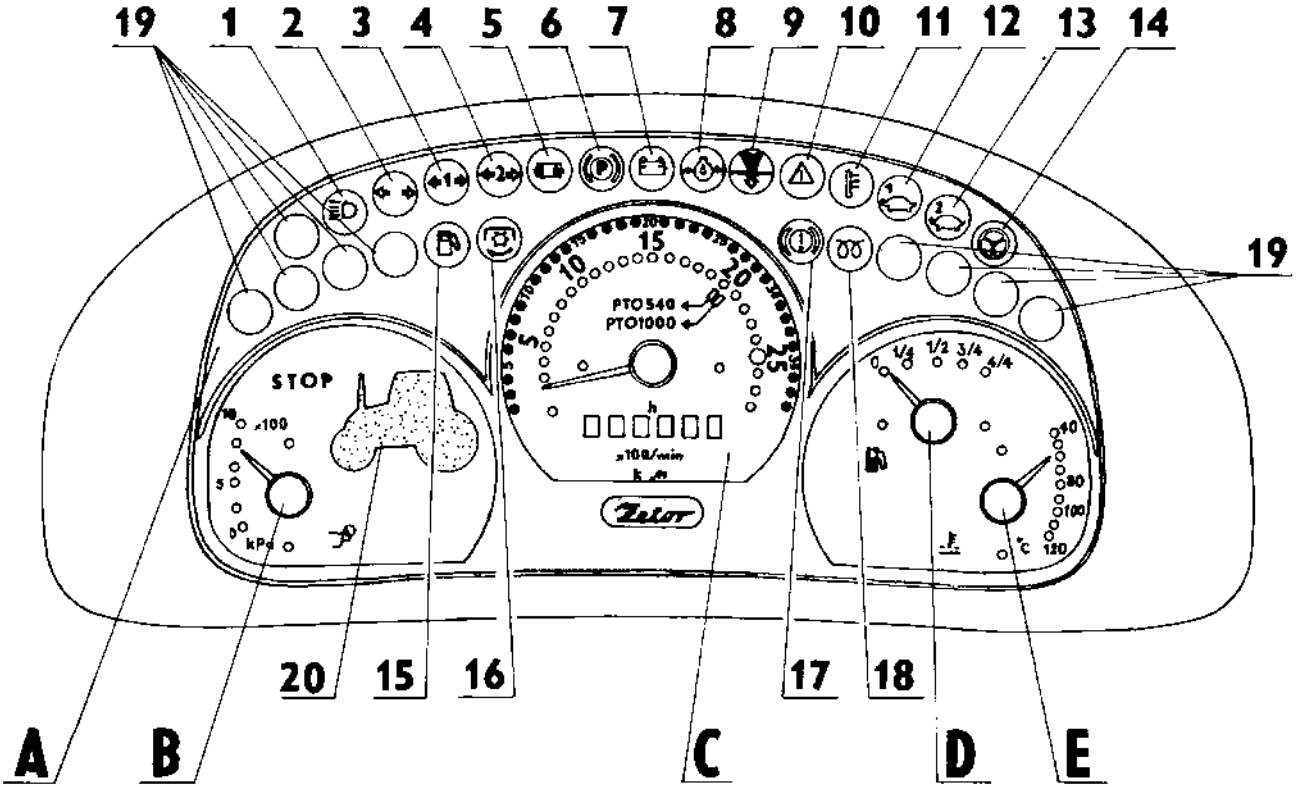

B21a

ANALOG DASHBOARD

The analog dashboard is installed as standard equipment.

DESCRIPTION OF INSTRUMENTS

A - Indicators
B - Air pressure meter
C - Engine revolution meter with a counter of operation hours
D - Fuel gauge
E - Coolant thermometer

INDICATORS

11 -High beam lights (blue). Lights up when high beam headlights are on.
12 -Tractor turn signal indicator (green)
13 -1st trailer turn signal indicator (green)
14 -2nd trailer turn signal indicator (green)
15 -Indicator of minimum air pressure in the brake system (red). Lights up if the air pressure for the air brakes of the trailer drops below the critical limit, i.e. 450 kPa.
16 -Parking brake (red). Lights up when the parking brake lever is engaged.
17 -Charging (red). During engine operation it lights up in case of a charging failure. If the engine is at standstill, it must be lit
18 -Lubrication (red). During engine operation it lights up if the engine oil pressure drops below 120 to 60 kPa. If the engine is at standstill, it must be lit
19 -Air cleaner clogging (yellow). It lights up if the air filter is clogged.
20 -Indicator of warning lights (red)
21 -The indicator of a critical temperature of the coolant (red) lights up when the temperature of approx. 100°C is achieved (not connected).
22 -Multiplier on indicator (green - 1st stage)
23 -Multiplier on indicator (green - 2nd stage)
24 -Indicator of a failure in the hydrostatic steering system (red). During engine operation it lights up in case of a hydrostatic steering failure. If the engine is at standstill, it must be lit
25 -Fuel (orange) Lights up when the remaining quantity of fuel in the tank amounts to 1/6 - 1/10 of the tank volume.
26 -PTO on indicator
27 -The indicator informs about wear of plates of the cardan brake of the front driving axle (red)
28 -Engine glowing (yellow) Indicates activation of the engine start facilitation device.
29 -Reserve
30 -Warning indicator (red) It lights up if the air pressure drops below the critical limit, i.e. 450 kPa or when the parking brake lever is engaged.

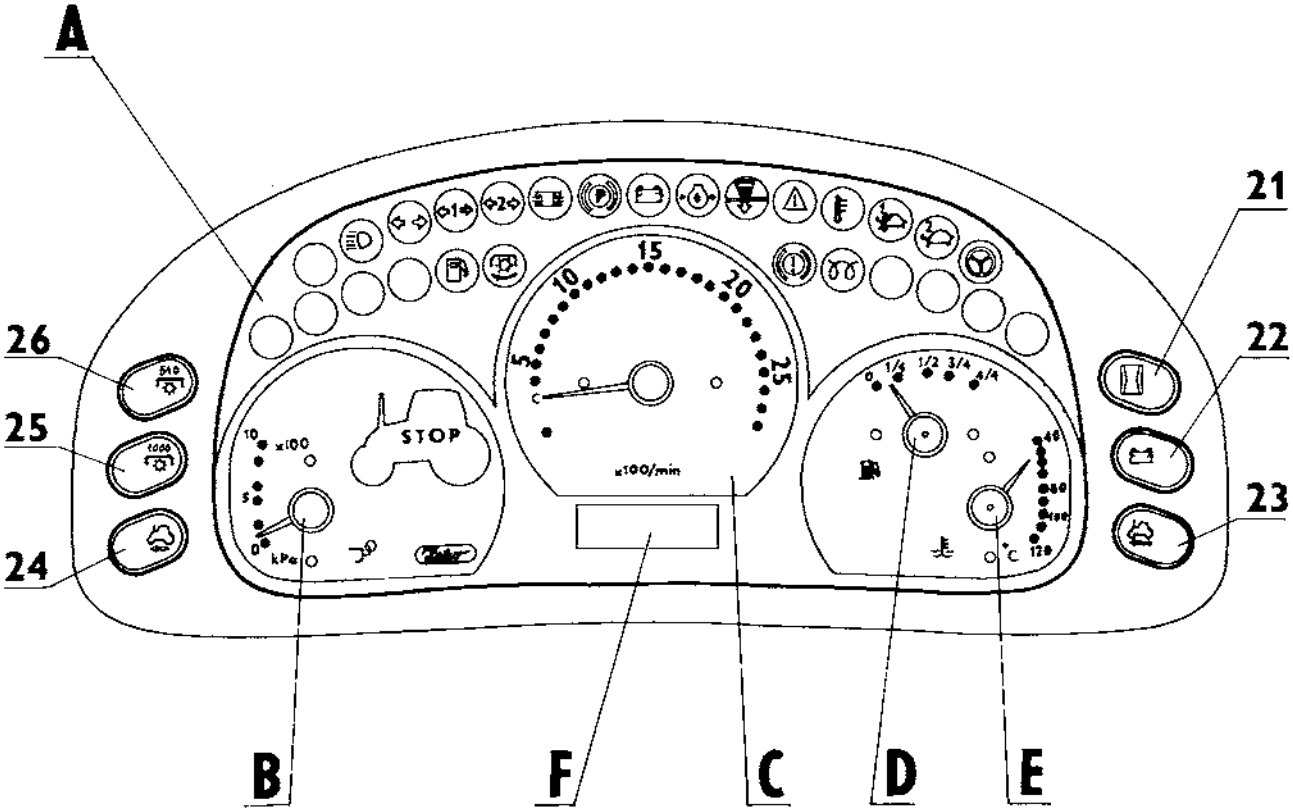

F54b

*DIGITAL DASHBOARD

The digital dashboard is installed as optional equipment on the customer's request.

DESCRIPTION OF INSTRUMENTS

F - Indicators
G - Air pressure meter
H -Engine revolution meter
I - Fuel gauge
J - Coolant thermometer
K -Display

INDICATORS AND BUTTONS

The arrangement of indicators on the digital dashboard is the same as on the analog dashboard.
After pressing of the selected button the corresponding symbol and value will appear on the display.

31 -Button of the operation hour counter. The value will appear on the display.
32 -Battery voltage button: The voltage value is displayed on the display (with the resolution of 0.1 V).
33 -Button of the number of covered kilometres (per day or since the last reset). The number of kilometres is shown on the display. The value can be reset with long pressing of the button.
34 -Button of the current travelling speed in km/h, which is shown on the display.
35 -1000 rpm PTO button. The rpm value with the resolution of 10 rpm is shown on the display.
36 -540 rpm PTO button. The rpm value with the resolution of 10 rpm is shown on the display.

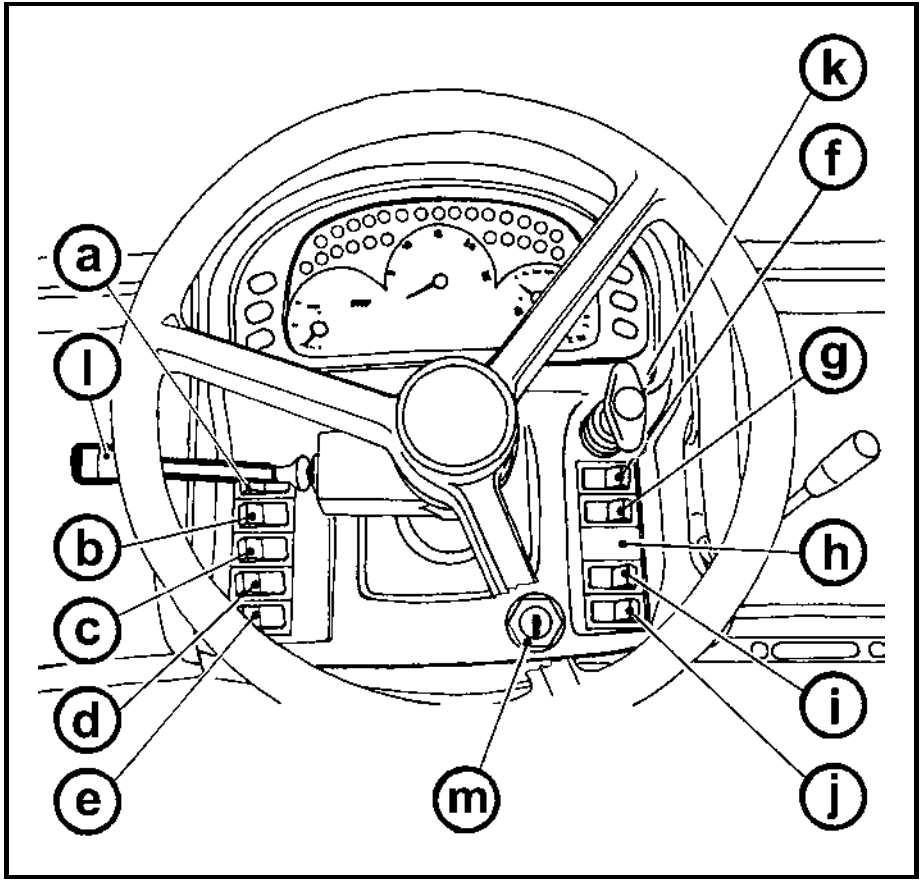

XF101

SELECTORS, SWITCHES AND LEVERS

a - Light switch (off, parking, main headlights)

b - Selector of low beam lights in the tractor grill and working lights on the tractor cab.

c - Fog light switch (off - on). The function of the fog light is indicated by the illuminated symbol on the switch.

d - Working headlight switch (off - on). The function of the working headlight is indicated by the illuminated symbol on the switch.

e - Warning light switch

f - Switch of the front driving axle. Engaged front driving axle is indicated by the illuminated symbol on the switch.

g - Beacon switch (off - on).

h - Free position

i - Torque multiplier preselection switch

j - Differential lock button

k - Stopping the engine run (stopping device)

l - Selector of turn signal, low and high beam lights and the acoustic and light warning signal

m - Switching box

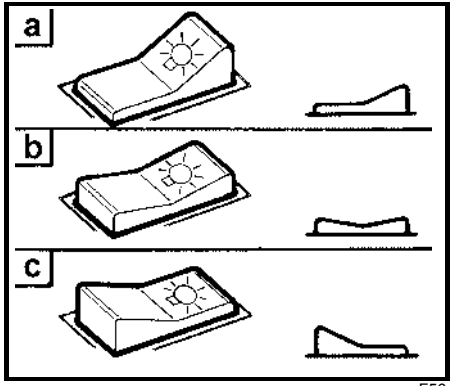

F56

LIGHT SWITCH (A)

a - Lights “OFF”

b - Sidelights and tail lights, registration sign and instrument lighting “ON”

c - All the electric appliances are ON as in position “b” In addition, low or high beam lights are “ON” (depending on the position of the selector of the turn signal, lights and horn)

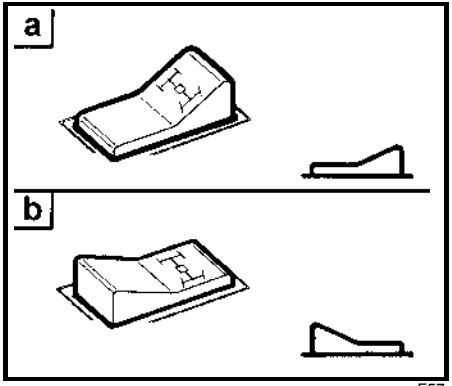

F57

SWITCH OF THE FRONT DRIVING AXLE (F)

⚠ *Use the front driving axle in case the rear wheels slip to increase the traction of the tractor.*

a - Front driving axle “OFF”

b - Front driving axle “ON”

When the tractor is stopped (the tractor is braked, engine stopped, key of the switching box off), the front driving axle is “ON”.

The front driving axle is on in the basic position (indicator lit) and it can be deactivated with the switch (indicator off).

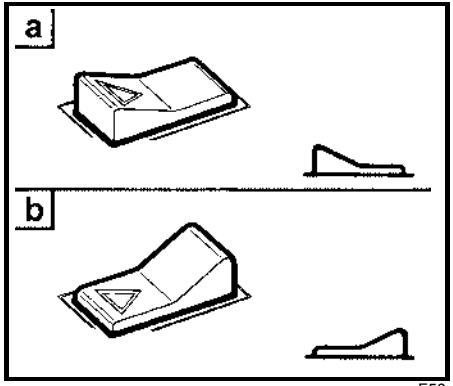

F58

WARNING LIGHT SWITCH (E)

a - Warning lights “OFF”

b - Warning lights “ON”

The function of the warning lights is signalled by intermittent flashing of the indicator on the dashboard.

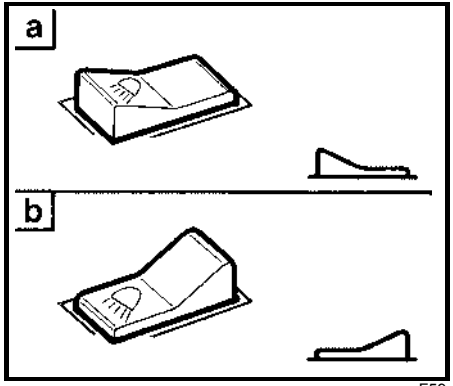

F59

SELECTOR OF THE GRILL AND CAB HEADLIGHTS (B)

a - Lights in the roof “OFF”
b - Lights in the roof “ON”

This selector controls the lights in the grill or roof of the tractor cab. Only use the lights in the cab roof if an implement is attached to the front three-point hitch that covers the headlights in the grill. Switched on lights in the cabin roof are indicated by the illuminated symbol on the switch.

High beam lights are only available in the tractor grill.

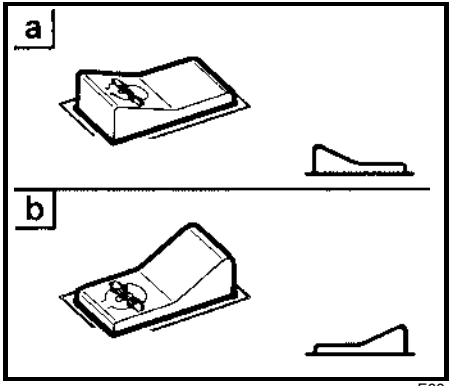

F60

FRONT, REAR DIFFERENTIAL LOCK BUTTON (J)

a - Differential lock engaged
b - Differential lock disengaged

The differential lock is engaged by pressing of the button, which returns to the original position after being released.

The engagement of the differential lock is indicated by the illuminated symbol on the switch.

The differential lock is automatically disengaged on pressing of the brake pedals.

In tractors equipped with the front driving axle with controlled differential lock the front differential lock is activated together with the rear differential lock.

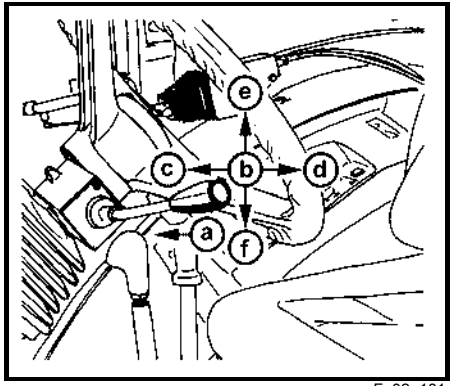

F_02_181

SELECTOR OF TURN SIGNAL, LOW AND HIGH BEAM LIGHTS AND HORN (L)

a - Acoustic horn - push the selector in the axial direction
b - Low beam lights
c - Right turn signal
d - Left turn signal
e - Light warning signal
f - High beam lights

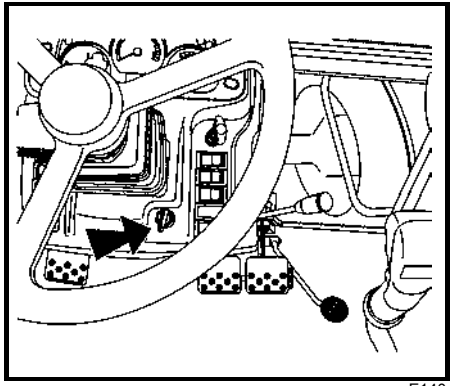

E140

SWITCHING BOX

The switching box is located on the dashboard, see arrow.

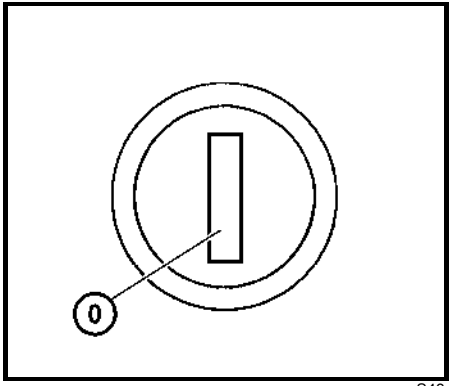

S43

KEY IN “0” POSITION

The voltage of all appliances controlled via the key is disconnected. The key can be removed.

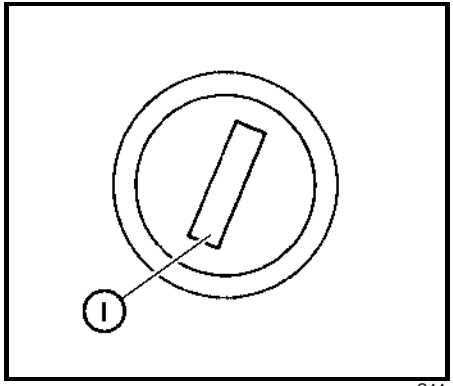

S44

KEY IN “I” POSITION

Voltage is connected to all appliances except the starter motor. The key is in this position during engine operation.

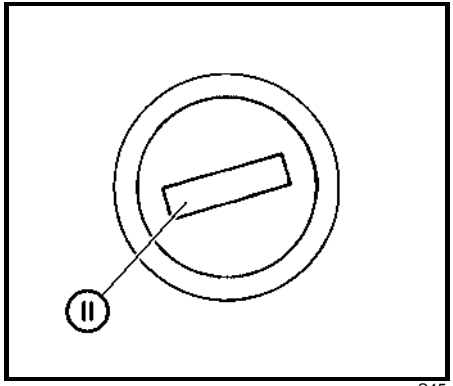

S45

KEY IN “II” POSITION

In this position the starter motor and all the electric appliances are connected except wipers, washers, cab fan and air-conditioning. After starting the key automatically returns to the “I” position.

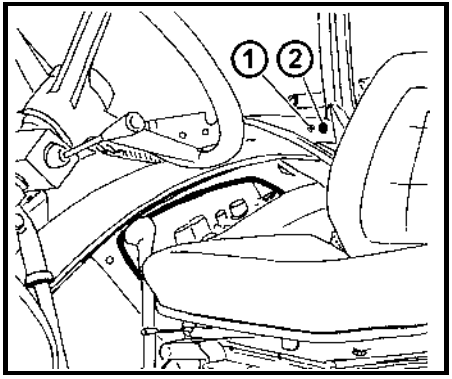

F_02_53n

LIGHTER AND THREE-PIN SOCKET

The lighter (1) and three-pin socket are located on the panel of the right rear fender.

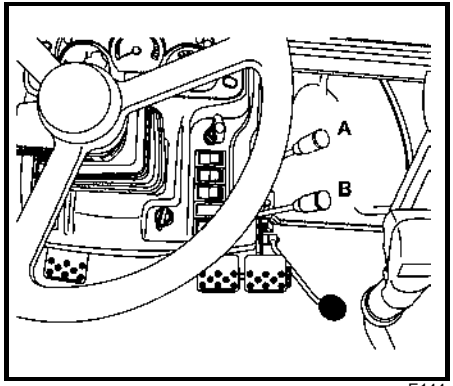

E144

MANUAL THROTTLE LEVER

A - Maximum delivery
B - Idle run

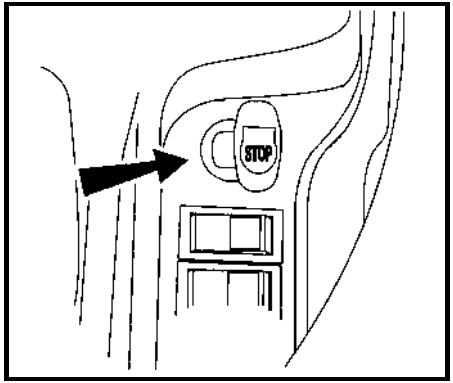

E145b

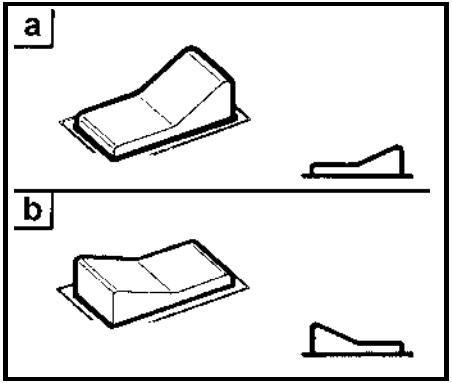

D102

ENGINE STOPPING CONTROL

By pulling the control upwards you will stop the engine run immediately and by turning it in the pulled position you will lock its position.

When the engine run has stopped, return the control to the original position.

If the control remains pulled up, the engine cannot be started.

TORQUE MULTIPLIER PRESELECTION SWITCH (I)

a - Preselection switch “OFF”

b - Preselection switch “ON”

Position (b) - preselection switch “ON” is indicated by the illuminated symbol on the switch.

If the preselection switch (b) is “ON”, on each pressing of the clutch pedal the medium stage of the multiplier **M** is automatically engaged - on the dashboard one indicator with the tortoise symbol is lit (see chapter Driving Operation / Indication of the multiplier function of the “Operator’s Manual”)

After releasing of the clutch pedal the multiplier can be controlled with the buttons on the shifting lever.

During engine starting the switch must be in the “OFF” position (a).

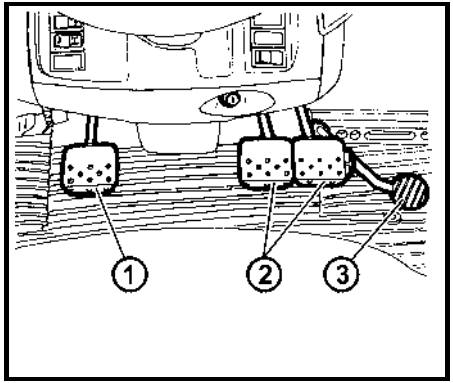

F_02_83

PEDALS AND LEVERS

37 -Travel clutch pedal

38 -Foot brake pedals connected with a latch

39 -Foot throttle pedal

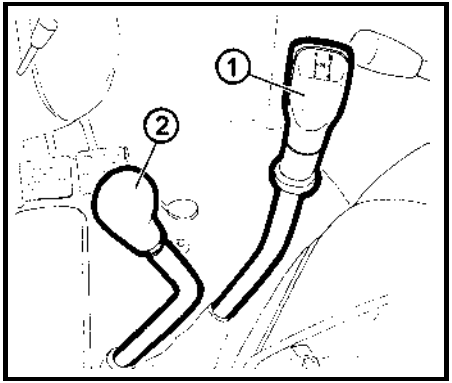

F_02_21

MAIN SHIFTING LEVER AND REVERSING LEVER

40 -Main shifting lever with three-stage multiplier control buttons

41 -Reversing lever

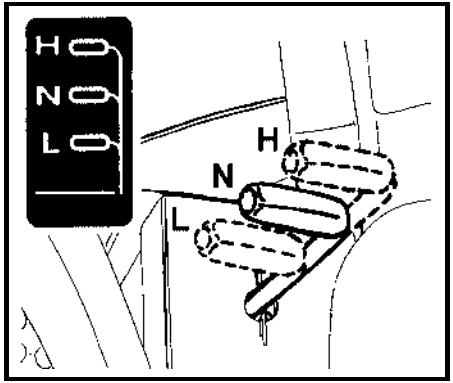

F72

SHIFTING LEVER OF ROAD AND REDUCED GEARS

The lever is located at the left side of the driver's seat.

H - - Road gears

N - Neutral

L - - Reduced gears

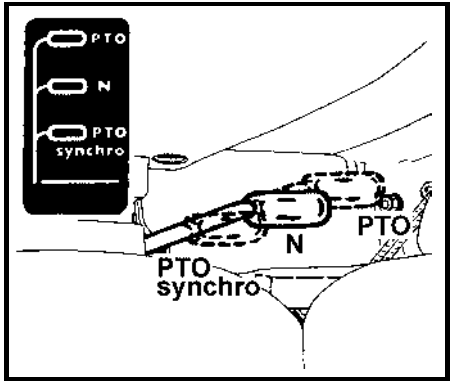

F73

SHIFTING LEVER OF DEPENDENT AND INDEPENDENT PTO RPM

The lever is located at the right side of the driver's seat.

PTO - Independent rpm of the PTO engaged

N - Neutral position
Use this position to facilitate the connection of the articulated shaft of an agricultural machine.
The end piece of the rear PTO can be rotated freely.

PTO synchro - Dependent rpm of the PTO engaged (the rpm value depends on the travelling speed of the tractor)

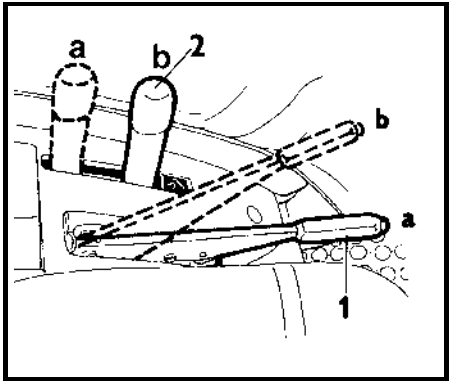

F74

LEVERS OF THE PARKING BRAKE AND HITCH FOR A SINGLE-AXLE TRAILER

42 - Parking brake lever
- a - Unbraked
- b - Braked

43 - Hitch control lever for a single-axle trailer
- a - Transport position
- b - Carrying hooks tilted off, the pulling hook with the carrier can be lowered

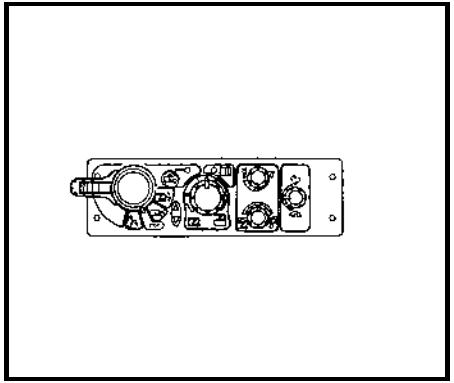

XF_02_213

HYDRAULIC CONTROL PANEL

It is located in the area of the right fender.
Bosch electro-hydraulic system
You will find a detailed description of the control and functions in the "Hydraulic system" and "Electro-hydraulic system" chapters of this Operator's Manual.

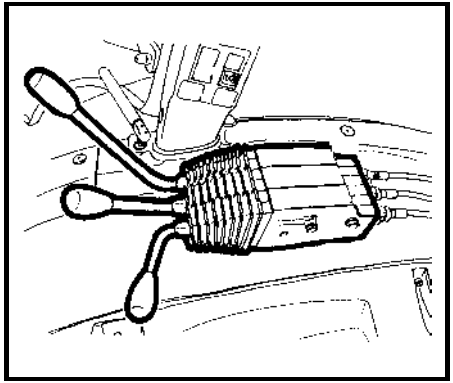

XF_02_51

CONTROL OF THE AUXILIARY HYDRAULIC DISTRIBUTOR (EXTERNAL HYDRAULIC CIRCUIT)

It is located on the upper part of the right fender.

You will find a detailed description of the control and functions of the integrated hydraulic distributor (external hydraulic circuit) in the "Hydraulic system" chapter of this Operator's Manual.

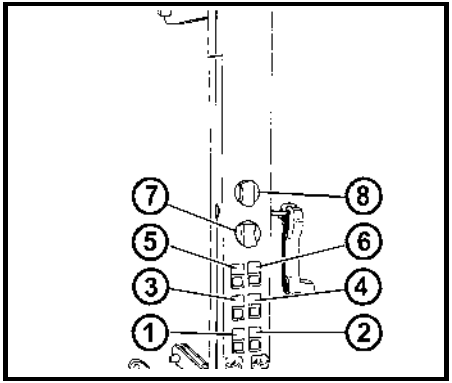

XF_02_156

CONTROL PANEL ON THE RIGHT CAB PILLAR

1 -*Front PTO switch
2 -Rear PTO switch
3 -Switch of the front working lights on the cab roof
4 -Switch of the rear working lights on the cab roof
5 -*Switch of rearview mirror heating
6 -* Switch of rear window heating
7 -Rear wiper switch
8 -Two-position selector of the front wiper and control of the front washer

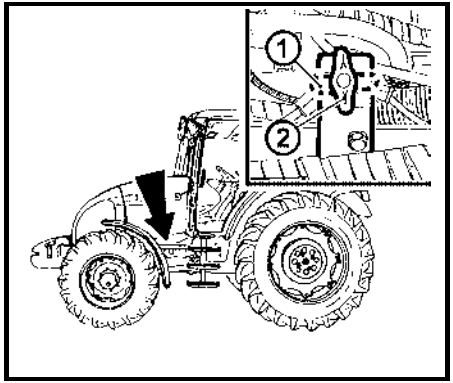

F_02_175a

BATTERY DISCONNECTOR

In case of long periods of inactivity, repairs, failures or an accident immediately disconnect the battery with the battery disconnector, which is found at the left side of the tractor.

1 -Battery disconnected
2 -Battery connected

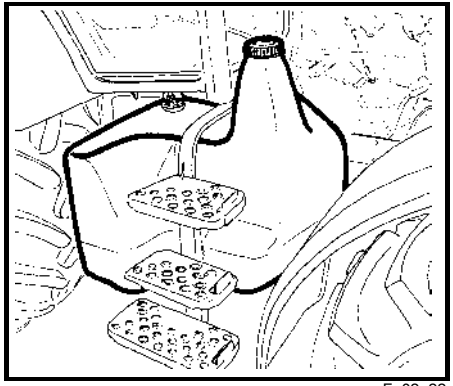

F_02_22

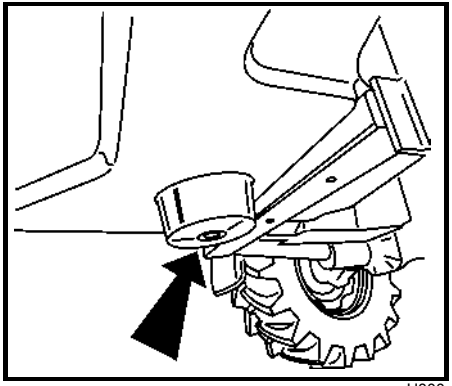

H800

FUEL TANK

All the tractor types are equipped with a plastic fuel tank with the volume of 180 l as standard.

Do not step on the fuel tank!

DRAIN PLUG OF THE FUEL TANK

The hole for draining dirt and fuel from the fuel tank is found in its bottom.

NOTES

DRIVING OPERATION

Before driving the new tractor first get acquainted with the gear shifting pattern and test individual positions of the shifting lever at the engine standstill.
Also check whether the technical condition corresponds to traffic safety requirements.

DRIVING OPERATION

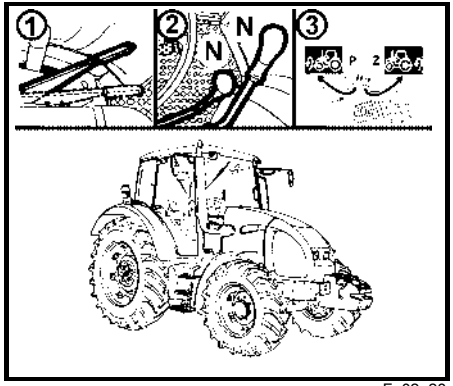

F_02_28

BEFORE YOU START

Before you start the engine, make sure:

1. *that the tractor is properly braked*
2. *that the main gear shifting lever and the reversing lever is in the neutral position*
3. *that the PTO switches on the right cab pillar are off.*

If the clutch pedal is not pressed, the engine cannot be started - the starting interlock switch is not actuated.

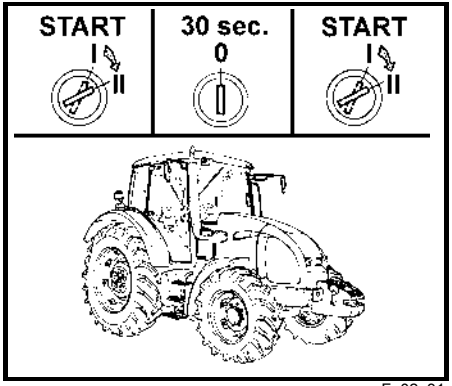

F_02_31

IF THE ENGINE WILL NOT START

Return the key to position “0”. Wait for 30 seconds and repeat the start.

Never support the stopping engine with the starter motor. There is a danger of damaging the starter motor.

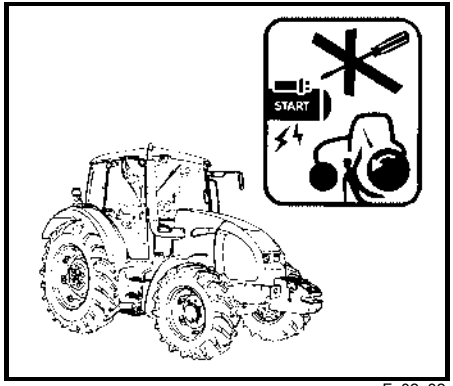

F_02_32

PROHIBITED STARTING METHODS

It is forbidden to start the engine by short-circuiting the starter motor terminals. Only start the tractor from the driver’s seat!

During any handling or repair of the started motor the minus pole of the battery must be disconnected and all the shifting levers, incl. PTO must be moved to the neutral position. The starter motor contacts are covered with a cap.

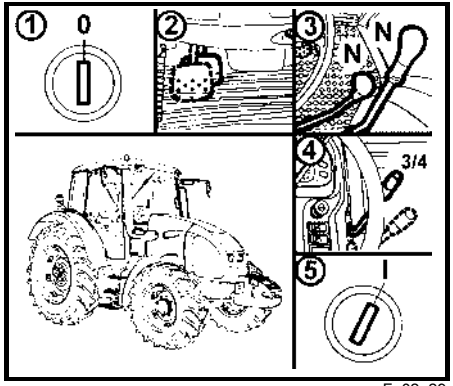

F_02_29

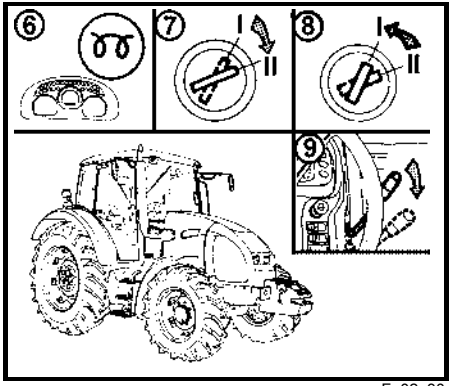

F_02_30

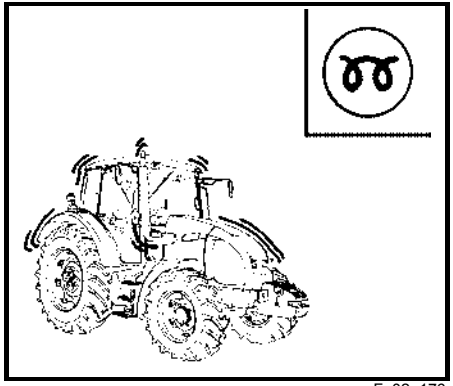

F_02_176

STARTING THE TRACTOR ENGINE

The tractors are equipped with glowing plugs in the cylinder heads as standard.

1. Insert the key into the switching box (position “0”).
2. Depress the clutch pedal.
3. Move the main shifting lever and the reversing lever to the neutral position.
4. Adjust the throttle for increased fuel delivery (approx. 3/4 of the maximum quantity).
5. Turn the key to position “I”. The yellow indicator signalling proper function of glowing will light up on the dashboard.
6. Wait until the glowing indicator goes off (the time depends on the temperature of the cooling liquid).

   ⚠ *If the glowing indicator only flashes instead of lighting, an error has occurred in the glowing system (chapter Indication of errors of the glowing system). Have the reported error repaired in a specialized repair shop.*
7. Turn the key to position “II” (start).
8. Release the key immediately after starting the engine. ***Do not start the engine for more than 15 s.***
9. After starting the engine gradually reduce the fuel delivery. Thus, you will prevent unnecessary operation of the engine at high engine speed.

INDICATION OF ERRORS OF THE GLOWING SYSTEM

An error of the glowing system is indicated by flashing of the glowing indicator.

- If at engine standstill the glowing indicator flashes once a second, the glowing will occur in the emergency mode as at low temperatures regardless of the coolant temperature.
- If at engine standstill the glowing indicator flashes twice a second, the glowing is off (out of operation).
- If the glowing indicator flashes permanently during engine operation, the glowing controller is faulty and the glowing has not been finished. This failure must be removed immediately as the battery might get discharged.

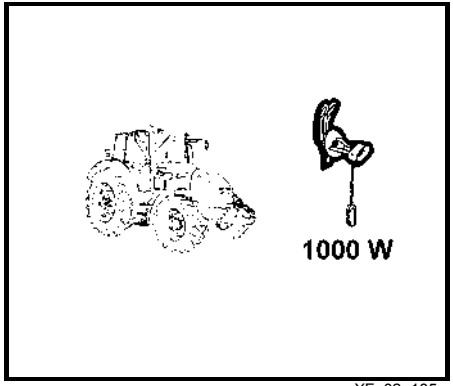

XF_02_185a

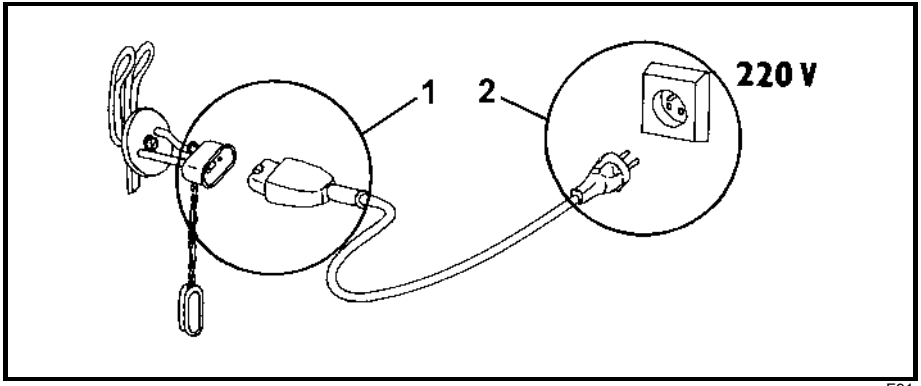

F91

∗COOLANT HEATER

The coolant heater is installed on the engine block.
The output of the heater is 1000 W at the 220 VAC supply voltage.

STARTING THE ENGINE WITH THE USE OF THE COOLANT HEATER

Heating the coolant facilitates engine starting at low ambient temperatures. The electric installation of the power supply and its protection against electric shock must comply with valid regulations.

1. First, insert the connector to the heater.
2. Then, connect the heater to electric mains with the voltage of 220 V.

With regard to reduced wear of the engine during starting at low temperatures, the use of the heater is recommended by the manufacturer. The heating time depends on the ambient temperature (1 - 2 hours before the planned start should be sufficient).

After the end of heating first disconnect the device from the electric mains and only then remove the connector from the heater!

Electric shock hazard!

It is necessary to ensure instructing of the tractor operator and regular inspections of the coolant heater, incl. the power supply cable in the sense of valid standards of the state where the tractor is operated, at least before every winter.

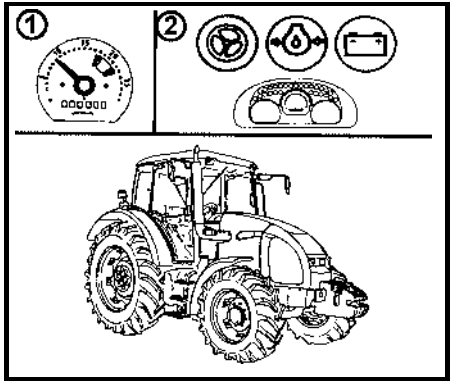

F_02_33a

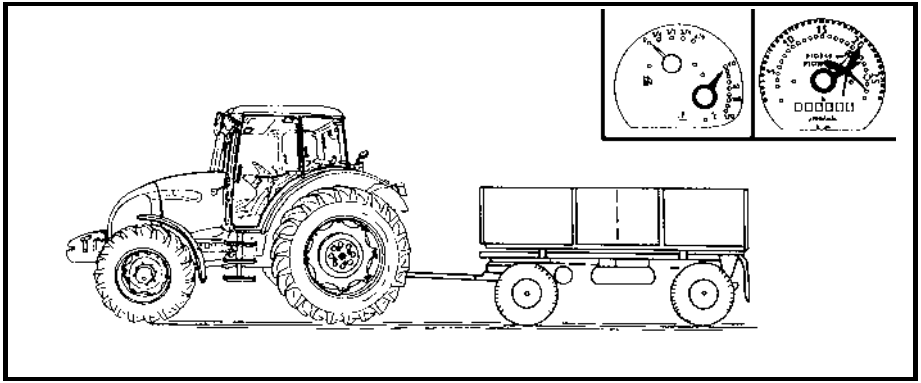

F_02_35

IMMEDIATELY AFTER STARTING

⚠ *After starting set the engine speed to 800 - 1000 rpm and let the engine run without loading for approx. 2 minutes.*

During this time check the lubrication, charging, hydrostatic steering (the indicators must go off) and other functions ensuring proper operation of the engine. The period of running the engine without loading must be observed, especially in winter.

ENGINE PREHEATING

⚠ *Continue preheating the engine while driving. Preheating the engine by means of a long idle run or abrupt increasing of the engine speed is harmful for the engine.*

Until the coolant temperature reaches 45°C, do not exceed the engine speed of 2000 rpm.

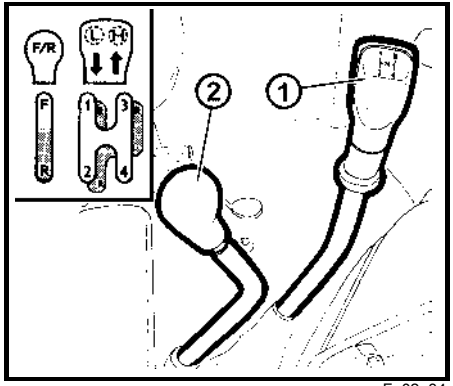

F_02_34

GEAR SHIFTING

The tractors are equipped with a four-speed synchronized gearbox, three-stage torque multipliers and two-speed reduction.

The four-speed gearbox is controlled with the main shifting lever with control buttons of the torque multiplier (1). The forward and reverse motion of the tractor is selected with the reversing lever (2).

The gearbox does not make it possible to use the fourth speed for the reverse motion.

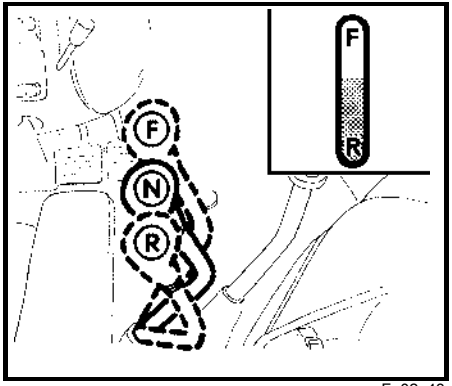

F_02_43

REVERSING LEVER

The reversing lever is used to select the driving direction of the tractor (forward, reverse).

F - Forward drive
N - Neutral
R - Reverse drive

The reversing gearbox offers 18 reverse speeds that are approximately as fast as the forward speeds. Therefore, consider well and select a suitable reverse speed for the particular character of work.

Shift the reversing lever with the clutch pedal depressed and the tractor standing. To drive in the reversing direction move the reversing lever to the R position.

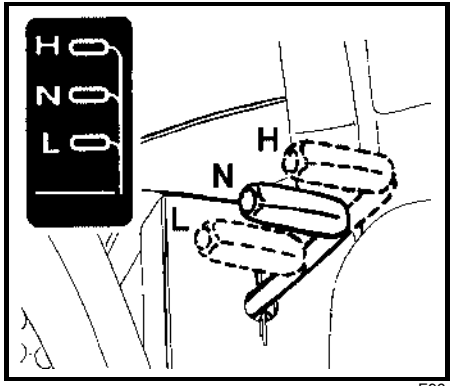

F96

SHIFTING OF ROAD AND REDUCED GEAR SPEEDS

H - - Road gears
N - Neutral
L - - Reduced gears

Shifting of gears of the main gearbox at reduced gear speeds is the same as in the case of road speeds

The shifting lever of road and reduced speeds can only be shifted with the tractor at standstill.

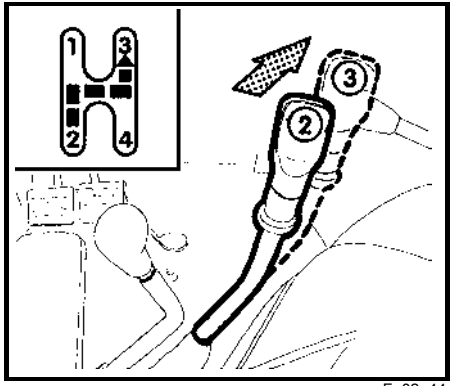

F_02_44

SHIFTING FROM LOWER TO HIGHER GEAR SPEED

Depress the clutch pedal (clutch disengaged). At the same time release the foot throttle pedal and shift the required higher gear. Smoothly release the clutch pedal (the clutch starts engaging) and at the same time increase the engine speed.

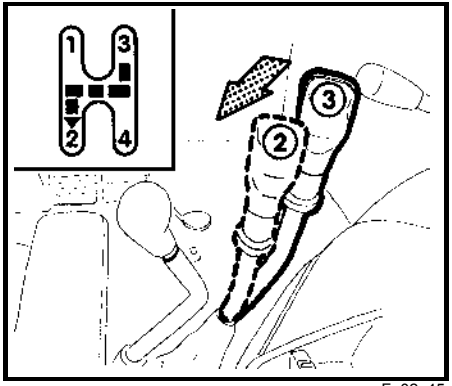

F_02_45

SHIFTING FROM HIGHER TO LOWER GEAR SPEED

Depress the clutch pedal and move the shifting lever via the neutral position to the lower gear.

Note: To extend the life of the synchromesh you can shift the gear from higher to lower speed using the “double clutch depressing”.

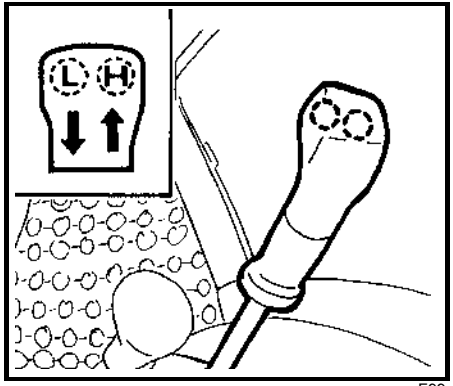

F99

THREE-STAGE TORQUE MULTIPLIER

The three-stage multiplier is standard equipment of all tractor types.

Shifting of individual stages of the three-stage multiplier is controlled with two buttons on the main shifting lever head.

It is performed without depressing of the travelling clutch pedal (under load).

The entire shifting is automatic even when the tractor is loaded.

H - 1.00 ratio (high stage)
M - 1.16 ratio (medium stage)
L - 1.34 ratio (low stage)

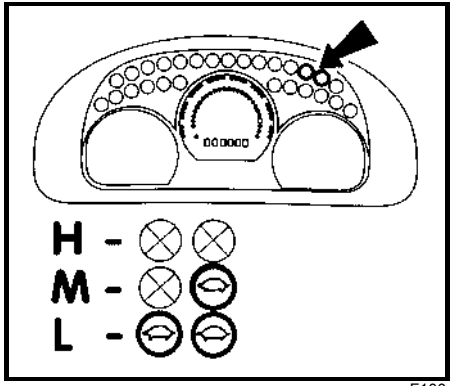

F100

INDICATION OF THE MULTIPLIER FUNCTION

Individual engaged stages of the multiplier (**H,M,L**) are signalled by indicators on the dashboard with the tortoise symbol.

H - Symbols OFF

M - One indicator with the tortoise symbol is lit.

L - Two indicators with the tortoise symbol are lit.

Note: On starting or stopping of the tractor engine the **H** stage is always engaged automatically.

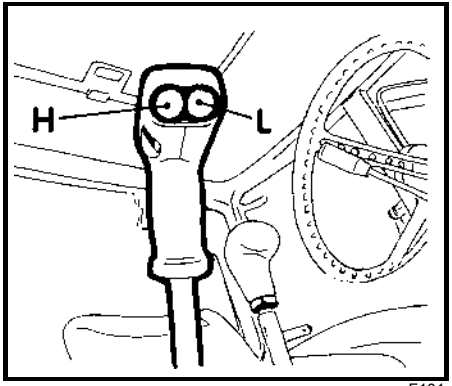

F101

SHIFTING THE STAGES OF THE TORQUE MULTIPLIER

H - Increasing the travelling speed

L - Reducing the travelling speed

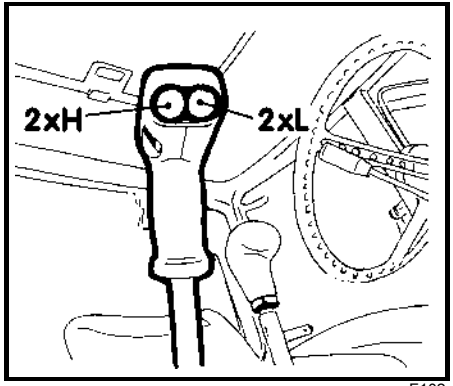

F102

INCREASING, REDUCING THE TRAVELLING SPEED BY TWO GEARS

2xH Increases the travelling speed by two gears

2xL Reduces the travelling speed by two gears

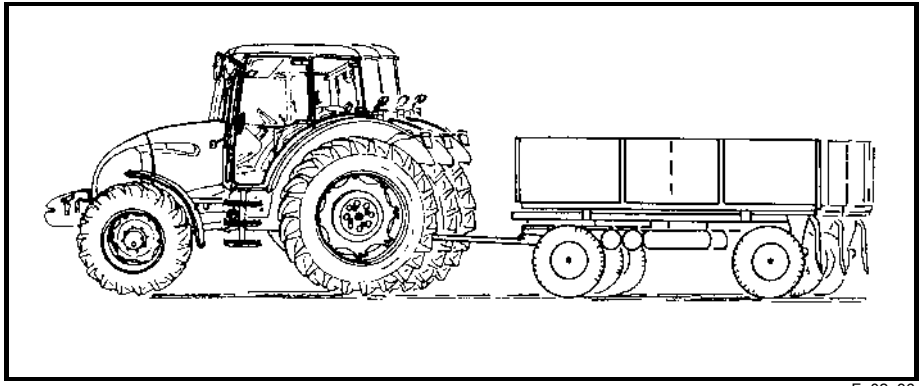

F_02_36

SETTING IN MOTION

1. Select road or reduced gears.
2. Depress the clutch pedal.
3. Shift the main shifting lever and the reverse lever to the neutral position and switch off the PTO switches on the right cab pillar.
4. Start the engine
5. Set the engine speed to 800 rpm.
6. Shift the reversing lever to the requested driving direction of the tractor (forward or reverse).
7. Select the suitable gear for putting the tractor in motion.
8. Slightly increase the engine speed.
9. Get the parking brake ready for releasing.
10. Release the clutch pedal until the travel engagement point and while simultaneously increasing the engine speed continue releasing the clutch pedal smoothly.
11. Release the parking brake completely.
12. Start moving smoothly and slowly.

Very fast acceleration may cause overloading of the power train, increased fuel consumption, excessive wear of tyres and damage of the transported load. Only use the 1st gear to put the tractor in motion when driving with a heavy trailer uphill and in rough terrain.

When shifting individual gear speed (1-4) or reversing (F-R) observe the instructions for putting the tractor in motion and gear shifting in this manual. When the tractor has been started and is still standing, depress the clutch pedal and wait for approx. 2 seconds. Only then shift the required gear speed or select the reverse direction.
To increase safety and to avoid unexpected situations use the foot brake during the shifting as well.

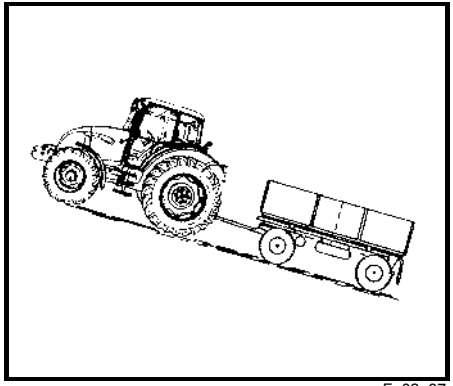

F_02_37

DRIVING UPHILL

When driving uphill, shift from the higher to the lower speed in time to avoid the engine speed dropping below 800 rpm and avoid such driving that would lead to stopping of the engine due to overloading.

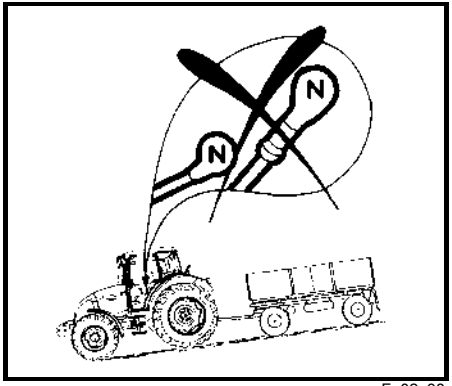

F_02_38

DRIVING DOWNHILL

Driving downhill without an engaged gear is prohibited. When driving down a longer slope, shift the lower gear, the steeper the slope is. If possible, shift the lower gear before the slope already.

Note: The gear that allows you to get uphill reliably is also suitable for getting down the hill safely.

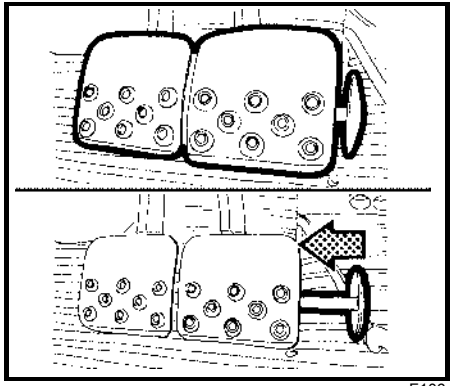

F106

FOOT BRAKES

The foot brakes are of the disc, wet, hydraulically controlled, double-pedal type with an automatic pressure compensator.

During driving on a road both the pedals must be connected with a latch. Only use unlatched pedals for braking the right or left wheel separately during terrain work and in the field.

Note: When driving down a steep slope with a trailer or semi-trailer equipped with air or hydraulic brakes you must use the foot brake from the beginning of the slope already.

During braking with one brake pedal the trailer brakes are not in operation!

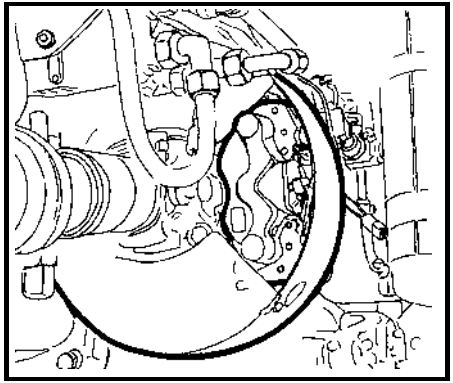

F108

FRONT CARDAN BRAKE

If only one brake pedal is used, the Cardan brake is not activated.

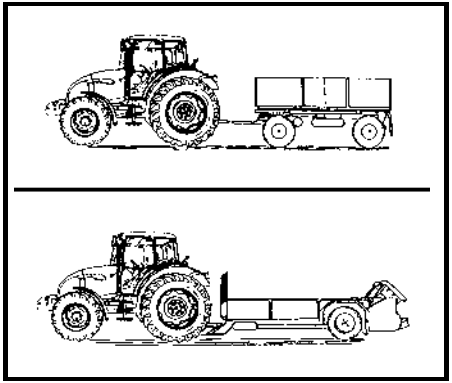

F_02_39

AIR BRAKES OF TRAILERS AND SEMI-TRAILERS

The control of the air brakes of trailers (semi-trailers) and the control of the tractor brakes is designed in such a way that the braking effect of both the vehicles is synchronized.

The working pressure is set by the pressure controller to 740 ± 20 kPa. If the pressure drops below 550 - 40 kPa, the relief valve puts the secondary devices (differential lock, engagement of the front driving axle, etc.) out of operation.

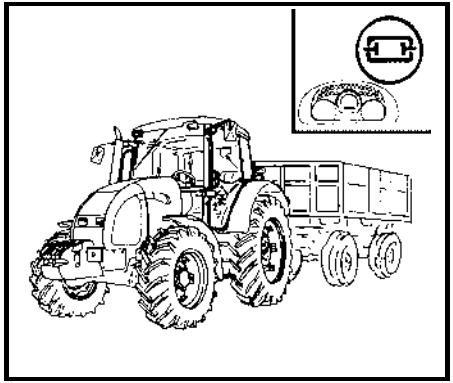

F_02_55

WARNING INDICATION OF AN AIR PRESSURE DROP

A pressure drop below 450 kPa is signalled by lighting up of the red indicator located on the dashboard.

In case of a pressure drop below 450 kPa in the air pressure system a tractor with a braked trailer or semi-trailer must not continue travelling until the air pressure increases again.

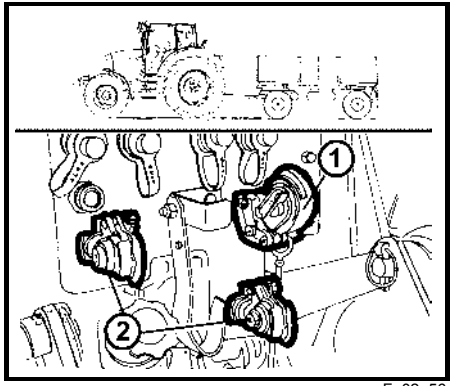

F_02_56

SINGLE-HOSE AND DOUBLE-HOSE BRAKES

1.Coupling of single-hose brakes
2.Couplings of double-hose brakes

After disconnection or without a connected trailer (semi-trailer) the couplings must be closed with a cap.

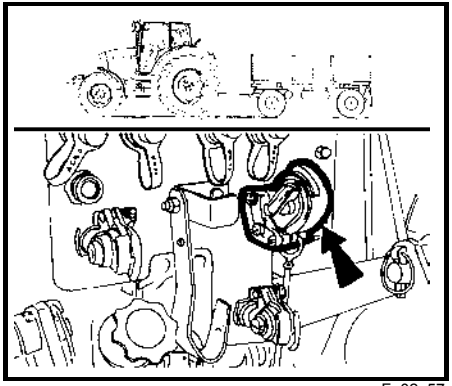

F_02_57

SINGLE-HOSE BRAKES

The cap is marked black.

*After connection of a trailer (semi-trailer) with the maximum permissible speed approved for the particular tractor type the maximum allowed speed of the set is **30 km/h.***
The maximum permissible speed of the set results from the maximum permissible speed of the slower vehicle in the set.

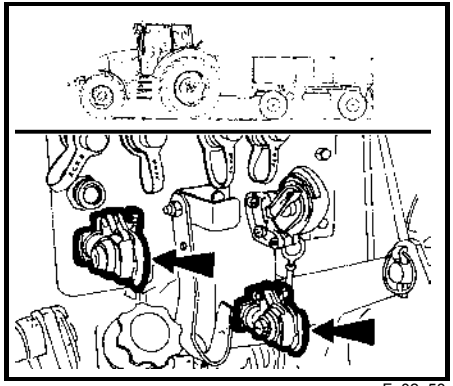

F_02_58

DOUBLE-HOSE BRAKES

The cap of the left coupling is marked yellow (braking branch) and the cap of the right coupling is marked red (filling branch).

*After connection of a trailer (semi-trailer) with the maximum permissible speed approved for the particular tractor type the maximum allowed speed of the set is **40 km/h.***
The maximum permissible speed of the set results from the maximum permissible speed of the slower vehicle in the set.

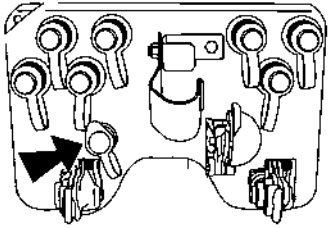

E230a

HYDRAULIC BRAKES OF TRAILERS

Connect the hydraulic brakes of a trailer or semi-trailer to the quick-coupler marked with an arrow.

The control of the hydraulic brakes of trailers (semi-trailers) and the control of the tractor brakes is designed in such a way that the braking effect of both the vehicles is synchronized. The working pressure is applied by oil delivered by a permanent gear pump of the hydraulic system.

The brake valve of the trailer is controlled by the pressure of the brake liquid from the main brake cylinders depending on the force applied onto the brake pedal. At the maximum depression of the brake pedal the pressure at the coupling must amount to 12 - 15 MPa. The brake valve makes sure that the brake function overrides the hydraulic function.

If during depression of the foot brake pedals shocks occur in the hydraulic circuit, it is necessary to bleed the hose leading from the brake valve to the quick-coupling.

During driving with a hitched trailer or semi-trailer the pedals of the foot brake must be connected and secured with a latch.

During braking with one brake pedal the hydraulic brakes of the trailer are not in operation.

CONNECTING AND DISCONNECTING QUICK-COUPLERS OF HYDRAULIC BRAKES OF THE TRAILER

When connecting and disconnecting the quick-couplers pay increased attention with regard to the residual oil that remains in the socket or on the plug of the quick-coupler.

For environmental reasons after every disconnection of quick-couplers this residual oil must be removed with any textile material.

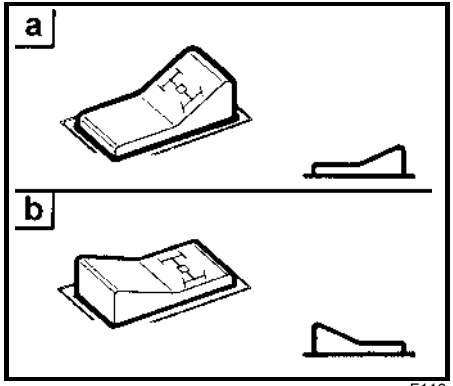

F116

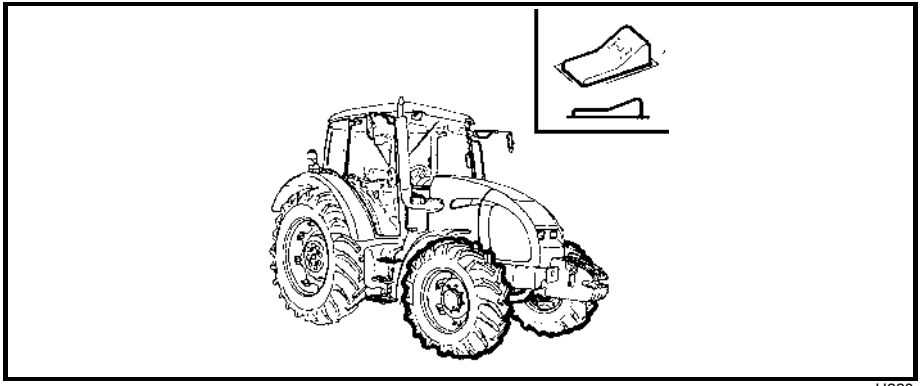

H223

FRONT DRIVING AXLE CONTROL

The front driving axle is “ON” in basic position (the indicator lights up). It can be disengaged with the corresponding switch on the dashboard.

a - Front driving axle “ON”

b - Front driving axle “OFF”

When the tractor is stopped (the tractor is braked, engine stopped, key of the switching box off), the front driving axle is “ON”.

DRIVING WITH THE FRONT DRIVING AXLE ENGAGED

⚠ *Use the front driving axle in case the rear wheels slip to increase the traction of the tractor.*

On a road and hard surface driving with the front driving axle engaged is acceptable up to the maximum speed of 15 km/h (driving with the front axle engaged causes increased wear of the front tyres).

Permanent engagement of the front driving axle is permissible if an agricultural machine or implement is attached to the front of the tractor. This condition is mentioned in the operator’s manual of the corresponding machine.

The maximum allowable speed of these sets is 15 km/h.

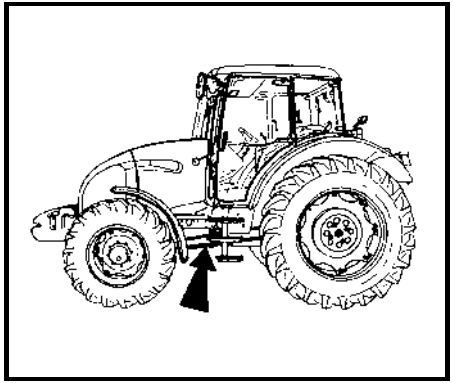

F_02_40

ENSURING FREE SPACE FOR THE CARDAN SHAFT OF THE FRONT DRIVING AXLE

⚠ *When installing auxiliary units or connecting implements make sure that around the Cardan shaft of the front driving axle there is at least 10mm free space all along its length at any oscillation of the axle.*
If this principle is not observed, there is a danger of damaging the tractor and machine.

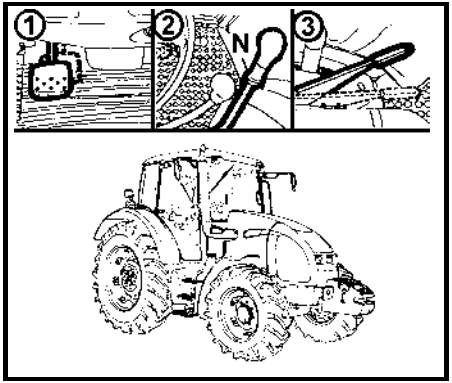

F_02_60

STOPPING THE TRACTOR - PARKING BRAKE

Under normal conditions stop the tractor slowly. Shortly before stopping:

1. Depress the clutch pedal.
2. Shift the main gear shifting lever to the neutral position.
3. After every stopping secure the tractor against accidental movement with the parking brake. Activation of the parking brake is signalled by illumination of the corresponding indicator on the dashboard.

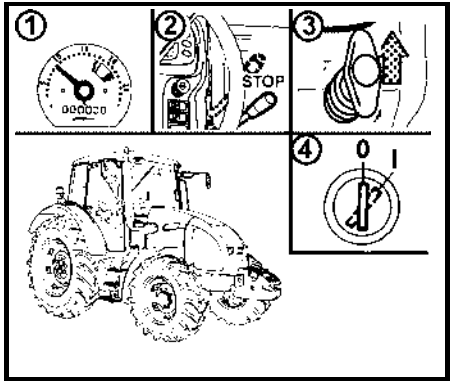

XF_02_186

STOPPING THE ENGINE

After work of the tractor when the engine was fully loaded, the engine must be left to cool down.

1. Before stopping the engine reduce the engine speed to 800 - 1000 rpm and let the engine run without loading for approx. 5 minutes.
2. Move the manual throttle lever to the STOP position.
3. Pull up the control of the engine stopping device and hold it in the extended position until the engine operation stops.
4. After stopping the engine you can turn the key from position “I” to position “0”.

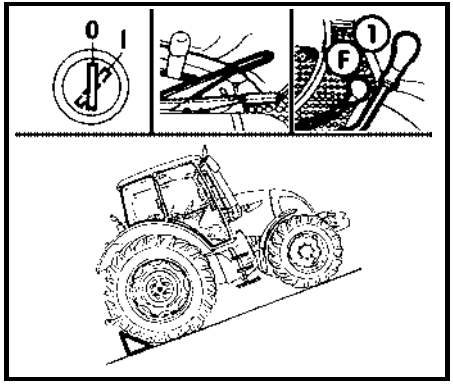

F_02_67

LEAVING THE TRACTOR

You can turn the key from the “I” to the “0” position only with the engine at standstill - the charging indicator must be lit.

If the tractor is standing on a slope, it must be secured against spontaneous movement: braked with the parking brake, engine stopped, the reversing lever shifted depending on the tractor inclination on the slope either in the forward or reverse position, the main shifting lever engaged in a low gear position and the wheels secured with wedges.

⚠ *Before leaving a tractor with the safety cab remove the key from the switching box and lock the cab.*

Note: When the engine is stopped, the front driving axle is automatically engaged.

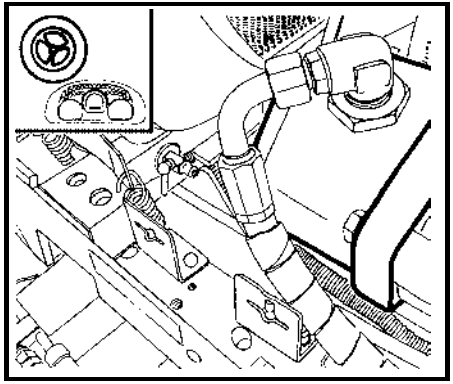

F_02_68

WARNING INDICATION OF A HYDROSTATIC STEERING ERROR

An error of the hydrostatic steering pump is signalled in case of a pressure drop below 120 kPa downstream of the pump on the dashboard by the corresponding symbol.

Note: During starting of the engine or at low engine speed the indicator may flash slightly; if after starting or increase of the engine speed the indicator goes off, it is not an error.

NOTES

RUNNING IN THE TRACTOR

Page

RUNNING IN THE TRACTOR

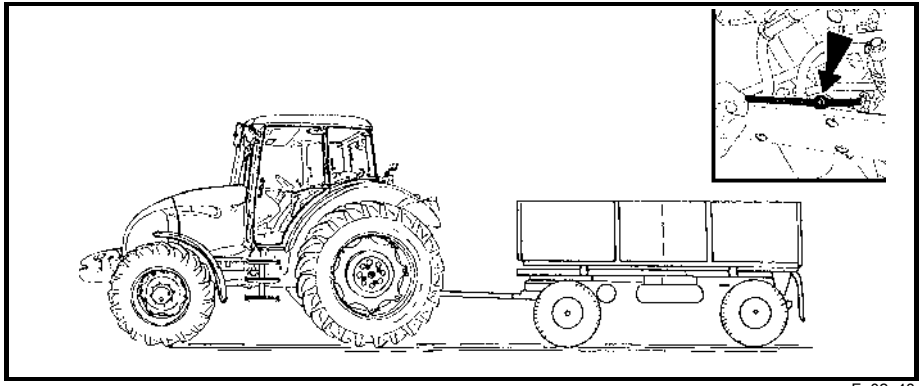

F_02_48

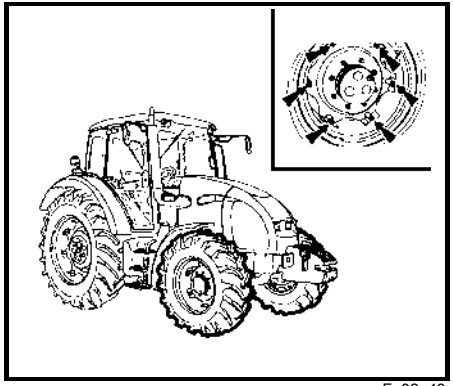

F_02_49

GENERAL PRINCIPLES FOR RUNNING IN THE NEW TRACTOR IN THE COURSE OF THE FIRST 100 HOURS OF OPERATION

During the first 100 operation hours:

- Load the engine normally
- Avoid operation under partial loading of the engine
- Avoid excessive idle run
- Frequently check the oil level in the engine (increased oil consumption is normal in this period).
- Check screw connections mainly of the supporting parts of the tractor.
- Immediately remove all established shortcomings; thus, you will prevent subsequent damage and possible impairment of operation safety.
- Proceed in the same way after a general overhaul of the tractor as well.

DURING THE FIRST 10 HOURS

- Run in the tractor in the transport regime.
- Tighten the fitting nuts of the front and rear wheels, including the bead / rim connections at the prescribed torque.

RUNNING IN THE TRACTOR

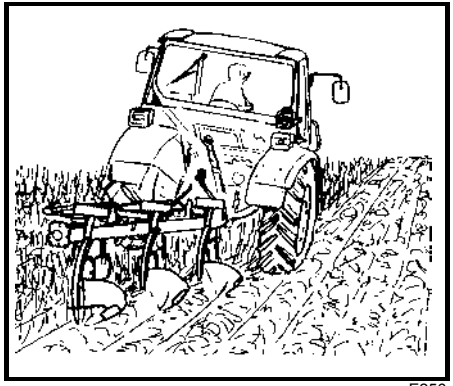

E256

FROM 100 HOURS ON

After running-in you can work with the tractor without any restrictions.

Recommended operation speed	1400 - 2300 rpm
Idle speed	800 ± 25 rpm
Operation oil pressure	0.2 - 0.5 MPa
Oil pressure at the idle speed	min. 0.05 MPa
Max. coolant temperature	106°C

NOTES

TRANSPORTATION

Before you start, make sure that the technical condition of the tractor corresponds to requirements for safe operation. When a trailer or implement is attached, check its connection and proper fixation of the load. Never leave the tractor while it is moving to connect the trailer by yourself. Also take care of your assistant's safety.

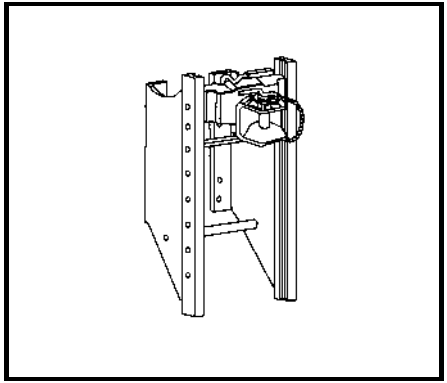

D201

CBM STAGE QUICK-ADJUSTING HITCH

It is designed for attachment of double-axle trailers or lighter single-axle semi-trailers. The guiding mouth is height adjustable. During work with various implements it may be necessary to adjust the height of the hitch or to disassemble the entire hitch.

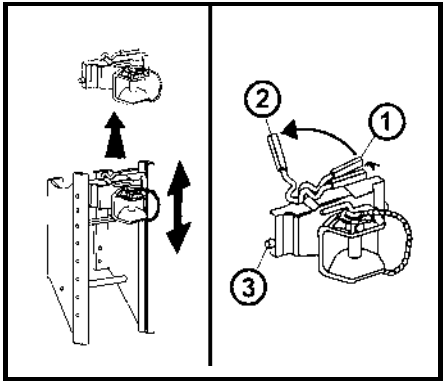

D202

HEIGHT ADJUSTMENT AND DISASSEMBLY OF THE CBM STAGE HITCH

By moving the control lever in the arrow direction to position (1) you will release the lever and by moving it subsequently to position (2) you will retract the locking pins (3). Now, the stage hitch is released and you can adjust its height or disassemble it.

When you release the lever from position (2), the locking pins (3) will extend and the lever will automatically return to the initial position.

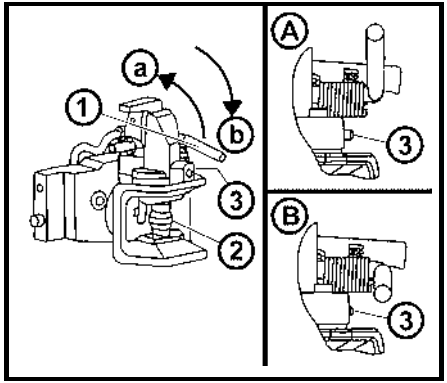

E304

AUTOMATIC MOUTH OF THE CBM STAGE HITCH

When the lever (1) is moved in the direction of the arrow (a), the pin (2) is retracted to the upper position, which is signalled by the extended indicator (3), see fig. (A).

When the mouth gets onto the shaft lug, the pin will automatically slide into the lug of the connected trailer. You can lower the hitch pin (2) manually by moving the lever (1) in the arrow (b) direction. The insertion of the pin is signalled by the retracted indicator (3), see fig. (B).

After the attachment of the trailer you must always check whether the indicator (3) is retracted in accordance with fig. (B).

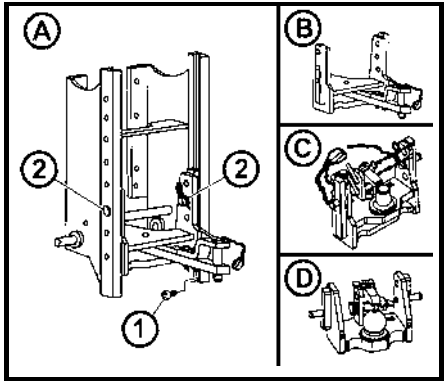

D204

MODULAR SYSTEM OF HITCHES FOR TRAILERS AND SEMI-TRAILERS

Module types:
Fig. (B) - Swinging draw-bar console
Fig. (C) - Swinging draw-bar console with a fixed pin
Fig. (D) - Console with a ø 80 ball

Disassembly, fig. (A):
1- Remove the locking screw (1).
2- Secure the module against sinking, release and disassemble the pins (2).
3- Slide the module out of the console downwards.

Do the assembly in the reverse order.

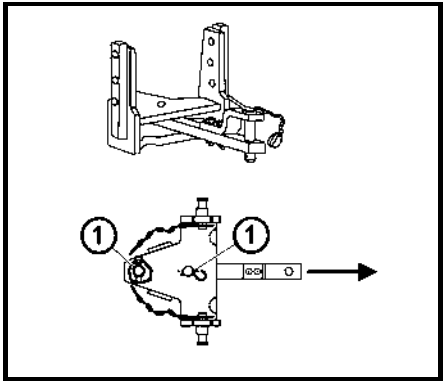

D205

SWINGING DRAW-BAR CONSOLE MODULE

The swinging draw-bar console module is located in the stage hitch console.

SWINGING DRAW-BAR

Disassembly:
1- Release and remove the pins (1).
2- Slide the swinging draw-bar out in the arrow direction.

Do the assembly in the reverse order.

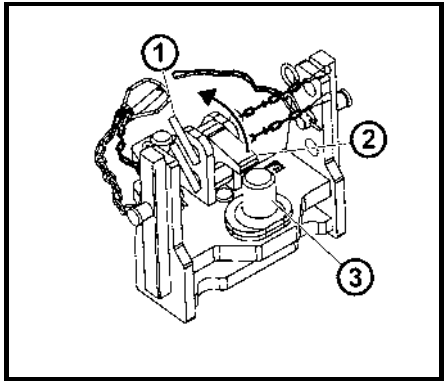

D206

SWINGING DRAW-BAR CONSOLE WITH A FIXED PIN MODULE

Perform the assembly and disassembly of the swinging draw-bar in accordance with the “Swinging draw-bar” chapter.

Connecting the shaft lug to the fixed pin (3):
1- Release and remove the pin (1).
2- Lift the locking wedge (2) in the arrow direction.
3- Connect the shaft lug to the fixed pin (3):
4- Return the locking wedge (2) to the original position and secure it with the pin (1).

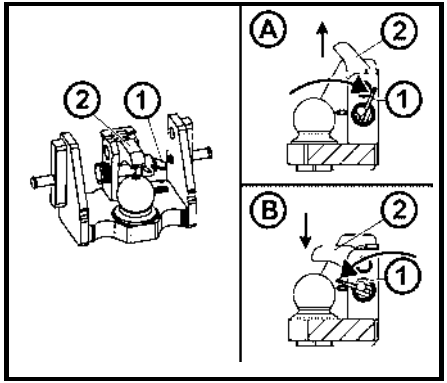

D207

CONSOLE WITH A Ø 80 BALL MODULE

The console with a ø 80 ball is only used to connect semi-trailers with a hitching device designed for a ø 80 ball.

Releasing the hitch, fig. (A):
By moving the lever (1) in the arrow direction you will remove the locking wedge (2).

Locking the hitch, fig. (B):
By moving the lever (1) in the arrow direction you will retract the locking wedge (2).

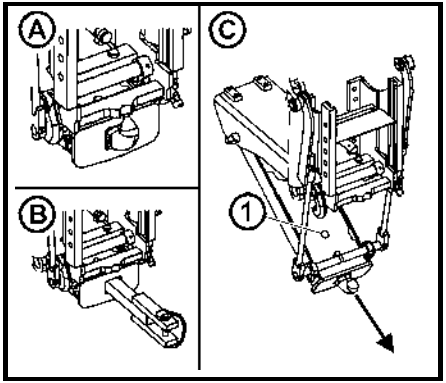

D208

HITCH FOR A SINGLE-AXLE CBM SEMI-TRAILER

The hitch for a single-axle semi-trailer may be equipped with a hook (A) or with a swinging draw-bar (B).

Replacing the hook with the swinging draw-bar (C):

1- Lower the hitch.
2- Release and remove the pin (1).
3- Remove the hook in the arrow direction.

Install the swinging draw-bar in the reverse order.

MAXIMUM PERMISSIBLE VERTICAL STATIC LOAD OF HITCHES FOR TRAILERS AND SEMI-TRAILERS								
Hitch type	Permis-sible ver-tical static load	Hitch pin Ø	Hitch type	Permis-sible ver-tical static load	Hitch pin Ø	Hitch type	Permis-sible ver-tical static load	Hitch pin Ø
						Hitch class C		
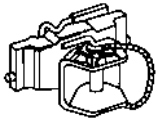	2,000 kg ↓	31 mm	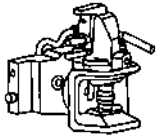	2,000 kg ↓	38 mm	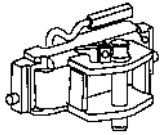	2,000 kg ↓	28 mm
Hitch class D2			Hitch class D3					
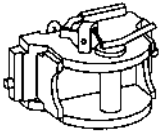	2,000 kg ↓	43 mm	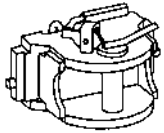	2,000 kg ↓	50 mm			

The maximum weight of an aggregated braked trailer or semi-trailer must not exceed the value specified on the data plate of the tractor and the value specified in the technical certificate of the tractor. The maximum permissible speed of the set results from the maximum permissible speed of the slower vehicle in the set.
Hitch of class C: max. weight of the trailer 6,000kg.
Hitch of class D2: max. weight of the trailer 14,000kg.
Hitch of class D3: max. weight of the trailer 20,000kg.

TRANSPORTATION

MAXIMUM PERMISSIBLE VERTICAL STATIC LOAD OF HITCHES FOR TRAILERS AND SEMI-TRAILERS								
Hitch type	Permissible vertical static load	Hitch pin (ball) Ø	Hitch type	Permissible vertical static load	Hitch pin (ball) Ø	Hitch type	Permissible vertical static load	Hitch pin (ball) Ø
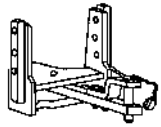	736 kg ↓	31 mm	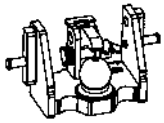	2,000 kg ↓	80 mm	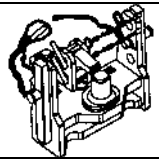	Fixed pin 2,000 kg ↓	44.5 mm
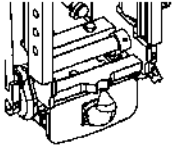	3,000 kg ↓	47 mm	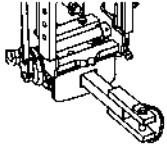	1,200 kg ↓	31 mm			

The maximum weight of an aggregated braked trailer or semi-trailer must not exceed the value specified on the data plate of the tractor and the value specified in the technical certificate of the traktor. The maximum permissible speed of the set results from the maximum permissible speed of the slower vehicle in the set.

DRIVE OF AGRICULTURAL MACHINES

Page

Before connecting a machine driven by a PTO of the tractor check whether the speed of the PTO of the machine corresponds to the speed of the tractor PTO (540 rpm or 1000 rpm). Different speeds may lead to serious damages and injuries.

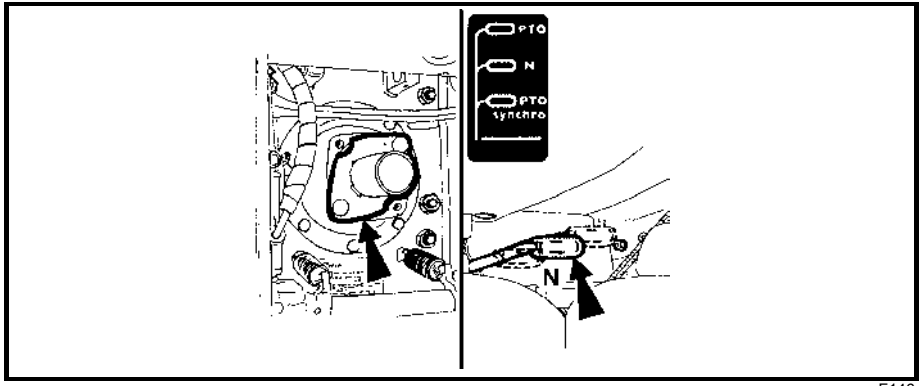

F146

WORKING WITH PTO

1. *When working with the PTO make sure that all the covers are properly attached.*
2. *After the end of the work always reassemble the PTO guard.*
3. *Always connect and disconnect the articulated shaft of the attached machine to and from the tractor with the lever of dependent and independent rpm of the PTO shifted to the N - Neutral position.*
4. *Any repairs or cleaning of parts of attached machines driven by the PTO may only be carried out with the engine stopped, PTO clutch disengaged and the lever of the dependent and independent PTO rpm shifted to the N - Neutral position.*

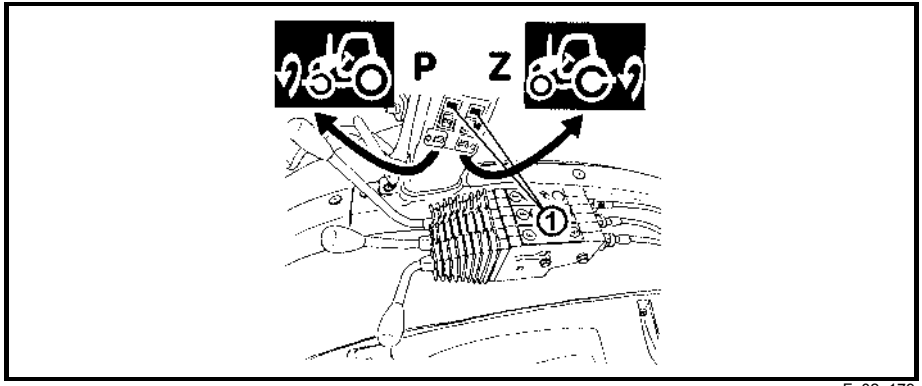

F_02_179

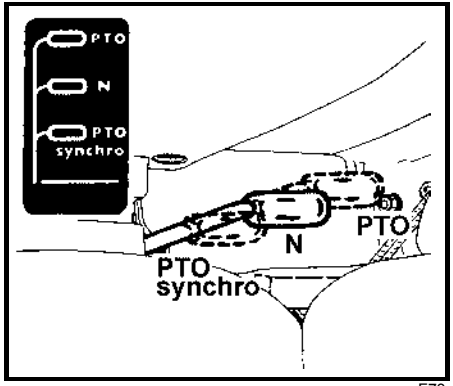

F73

CONTROL OF THE FRONT AND REAR PTO

The clutches of the PTO's are switched on (at the min. engine speed of 1500 rpm) and off electro-hydraulically.

The switching is performed with the use of switches located on the right cab pillar. The switches are equipped with mechanical locks (1) against accidental activation. When using a switch, press the lock downwards.

P - The switch controls the electromagnetic valve of the front PTO

Z - The switch controls the valve of the rear PTO

By pressing both the switches you will activate both the PTO's (front and rear).

Activation of the PTO's is indicated by the illuminated symbol on the switch.

REAR PTO - SELECTION OF DEPENDENT AND INDEPENDENT SPEED (RPM)

PTO - Independent rpm of the PTO engaged

N - Neutral position
Use this position to facilitate the connection of the articulated shaft of an agricultural machine.
The end piece of the rear PTO can be rotated freely.

PTO synchro - Dependent rpm of the PTO engaged (the rpm value depends on the travelling speed of the tractor)

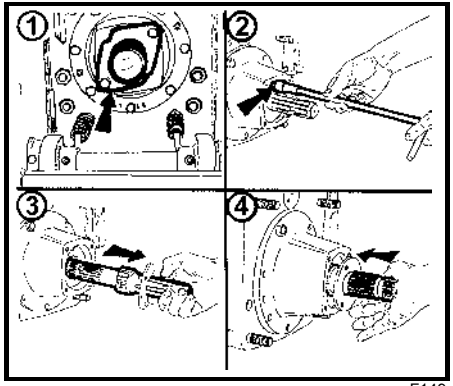

F149

CHANGING THE INDEPENDENT SPEED VALUE OF THE REAR PTO

The speed setting of the PTO is performed by turning of the Ø 35 mm end piece of the PTO.

1. Disassemble the PTO guard.
2. Release the shim.
3. Remove and turn the end piece.
4. Insert the end piece with the opposite end first and secure the shim.

Check whether you have set the proper speed with regard to the attached implement.
You can only change the 540 and 1000 rpm PTO speed (or 750 and 1000 rpm) with the PTO stopped.

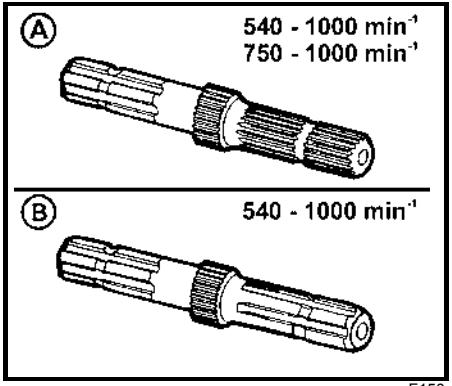

F150

PTO END PIECES

Speed (rpm)	End piece
540 and 1000 rpm standard (A)	540 - 6 splines 1000 - 21 splines standard
540 - 1000 standard (B).	540 - 6 splines 1000 - 6 splines option
∗750 and 1000 option (A)	750 - 6 splines 1000 - 21 splines
∗1000 option	It is not possible to change the rpm value - the end piece is not replaceable

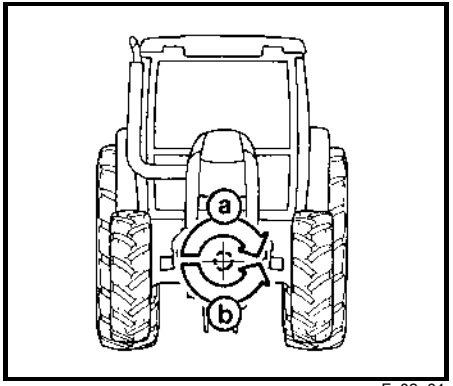

F_02_64

FRONT PTO - ZUIDBERG

The front PTO is equipped with a fixed six- or twenty-one-spline end piece and it only has the speed of 1000 rpm.

The tractor may be optionally equipped with the front PTO with a different turning direction:

a - in accordance with the turning direction of the engine (standard)

b - against the turning direction of the engine (* option)

DRIVE OF AGRICULTURAL MACHINES

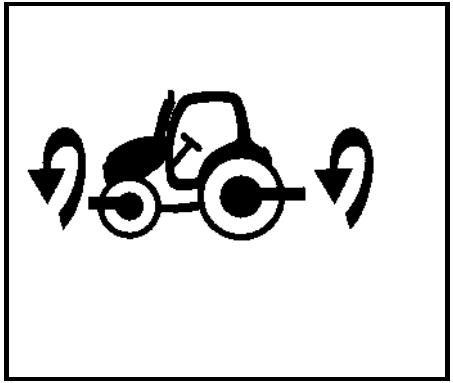

F_02_46

MAXIMUM TRANSMITTED POWER

PTO	Transmitted power
Front (Zuidberg)	
1000 rpm	45 kW*
Rear	
1000 rpm	full engine power
540 rpm	full engine power
540E rpm	full engine power

* In case of power transmission without impacts the value of the maximum transmitted power can be increased to 50 kW

DRIVE OF MACHINES WITH LARGER INERTIAL MASSES (CRUSHERS, HARROWS, MOWING MACHINES, ETC.)

The Cardan shaft of the drive of these machines must be equipped with a "free-wheel" device that will ensure disconnection of the torque transmission in case of return transmission from the machine to the tractor

NOTES

HYDRAULIC SYSTEM

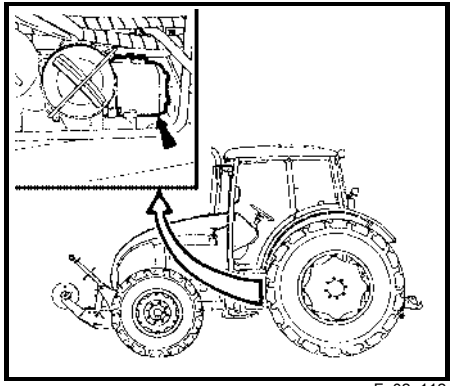

F_02_112

HYDRAULIC SYSTEM

The system consists of the inner and outer circuit.
The source of pressurized oil is a gear pump.
Oil is drawn from the common filling of the gearbox and final drive housing.

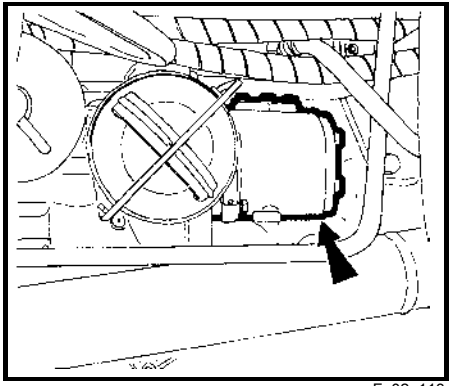

F_02_113

HYDRAULIC PUMP

The hydraulic pump cannot be disengaged. When the engine is running, the pump is in operation.

2.	Pump type UD 25.02 V	Delivered quantity 69 l/min

The pressure generated in the hydraulic system by the hydraulic pump is limited by a relief valve to 20 MPa.

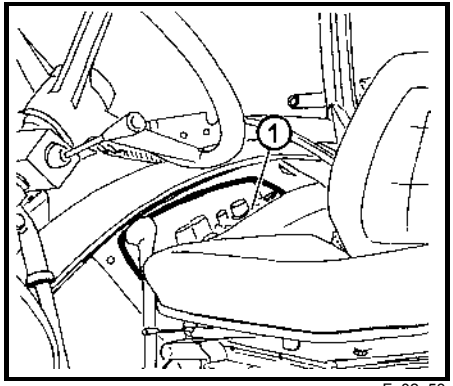

F_02_53

LOCATION OF CONTROL ELEMENTS - EHR - B - BOSCH ELECTRO-HYDRAULIC SYSTEM

The control panel (1) is located on the right fender.

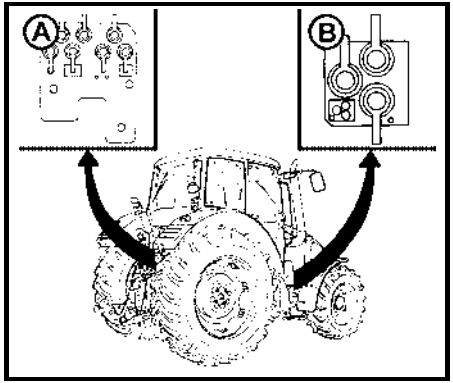

F_02_124

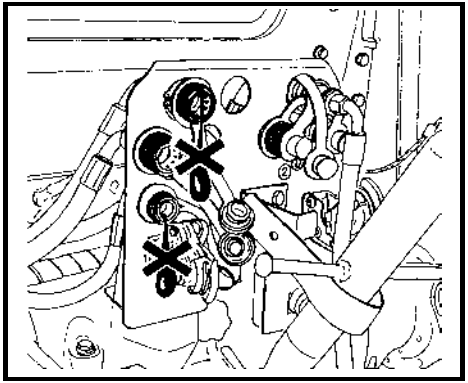

OUTER HYDRAULIC CIRCUIT

The outer circuit supplies pressurized oil to hydraulic implements connected to the outer outlets of the hydraulic system terminated with quick-couplers.

The sockets of the rear (A) as well as front (B) quick-couplers have the inner diameter of 12.5 mm and comply with the international ISO 5675 standard.

CONNECTING AND DISCONNECTING QUICK-COUPLERS

When connecting and disconnecting the quick-couplers pay increased attention with regard to the residual oil that remains in the socket or on the plug of the quick-coupler.

For environmental reasons after every disconnection of quick-couplers this residual oil must be removed with any textile material.

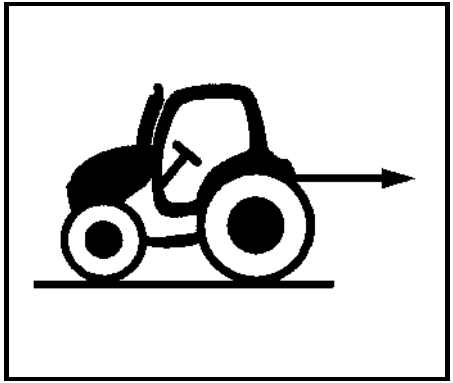

F_02_210

OIL QUANTITY DRAWN FROM THE OUTER HYDRAULIC OUTLETS

For the maximum possible quantities of drawn oil see the following table.

⚠ *In case of higher consumption the transmission oil level may drop in such a way that the transmission and hydraulic pumps may aspirate air and there is a danger of damaging the pumps, mainly the transmission pump, as well as the torque multiplier or the PTO clutch.*

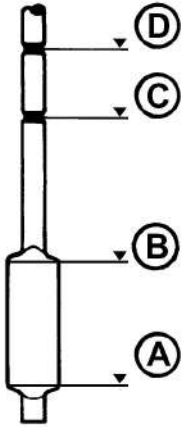		***Type of work:*** On level ground ***Max. oil consumption:*** 12 litres ***Gearbox filling:*** Upper edge of the dipstick tab (B)
		***Type of work:*** On a slope ***Max. oil consumption:*** 12 litres ***Gearbox filling:*** Lower mark on the cylindrical part of the dipstick (C), transmission oil filling increased by 7 litres
		***Type of work:*** On level ground ***Max. oil consumption:*** 27 litres ***Gearbox filling:*** Upper mark on the cylindrical part of the dipstick (D), transmission oil filling increased by 15 litres, maximum permissible oil quantity in the gearbox
		***Type of work:*** On a slope ***Max. oil consumption:*** 20 litres ***Gearbox filling:*** Upper mark on the cylindrical part of the dipstick (D), transmission oil filling increased by 15 litres, maximum permissible oil quantity in the gearbox
		***Type of work:*** On level ground ***Max. oil consumption:*** 8 litres ***Gearbox filling:*** Lower edge of the dipstick tab (A); minimum permissible oil quantity in the gearbox

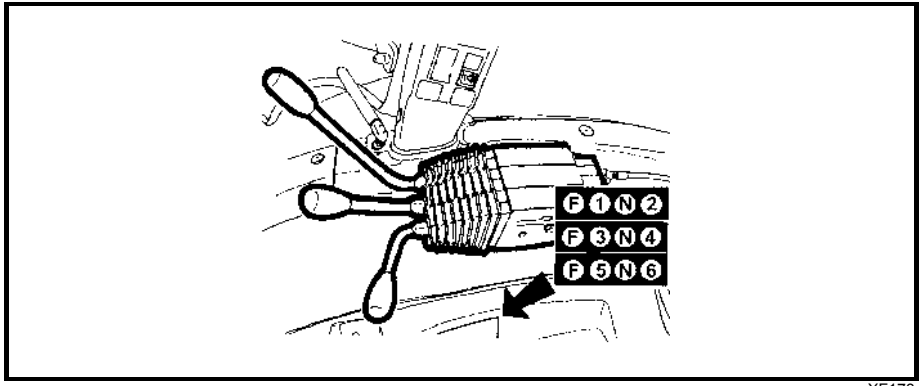

XF173

HYDRAULIC DISTRIBUTOR OF THE OUTER HYDRAULIC CIRCUIT

A three-section or two-section distributor with four-position sections may be installed in the tractor. The control levers of the sections are installed in the cab on the fender of the right rear wheel. The first (right) section of the distributor is equipped with locking in pressure positions with hydraulic securing. In the case of the two-section and three-section distributor it is the section controlling quick-couplers “1” and “2”. Outlet “4” of the two-section distributor and “4” and “6” of the three-section one is additionally equipped with a check valve - used for the connection of a working branch of the machine with an increased requirement for leakproofness - minimum lowering of the implement e.g. during transport.

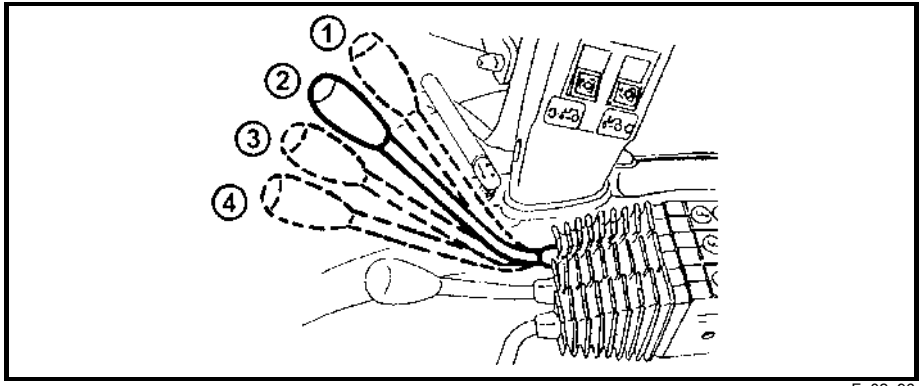

F_02_96

DESCRIPTION OF THE FUNCTIONS OF INDIVIDUAL POSITIONS OF CONTROL LEVERS OF THE HYDRAULIC DISTRIBUTOR

	Lever position	*Function*
1	***Rear (upper) position***	Pressurized oil flows to quick-couplers: “**2**“, "**4**", "**6**" Quick-couplers connected to the return line: “**1**“, “**3**“, “**5**“
2	***Central position***	Neutral
3	***Front (lower) position***	Pressurized oil flows to quick-couplers: "**1**", "**3**", "**5**" Quick-couplers connected to the return line: “**2**“, “**4**“, “**6**“
4	***Front limit position***	With an increased force you can shift the control levers from position (3) further to the front to position (4), i.e. floating (free) position, where the levers are locked. Both the quick-couplers of each section are connected to the return line in this position.

Note: The lever automatically returns from positions (1) and (3) to the neutral. Not applicable to the section with the kick-out function.

Always connect a single-acting cylinder to quick couplers
“2”, “4” *ofthe two-section auxiliary distributor and*
“2”, “4”, “6” *of the three-section auxiliary distributor.*
Always connect a double-acting cylinder to quick-couplers of one section.

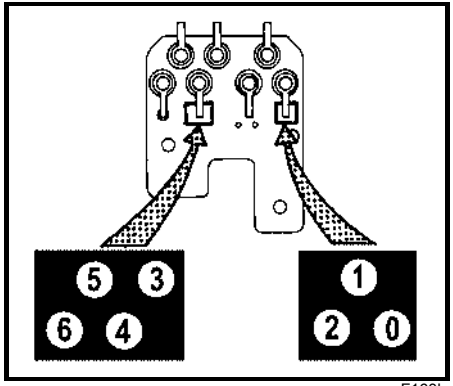

F163b

REAR OUTLETS OF THE OUTER HYDRAULIC CIRCUIT

In the tractor version that is not equipped with the front outlets or the front three-point hitch and that is equipped with

a -a three-section distributor the rear outlets are terminated with pressure quick-couplers "1" to "6".

b -a two-section distributor the rear outlets are terminated with pressure quick-couplers "1" to "4".

The third quick-coupler marked “0” is directly connected to the final drive housing and is designed for return oil from external hydraulic implements (e.g. from rotational hydraulic motors, etc.).

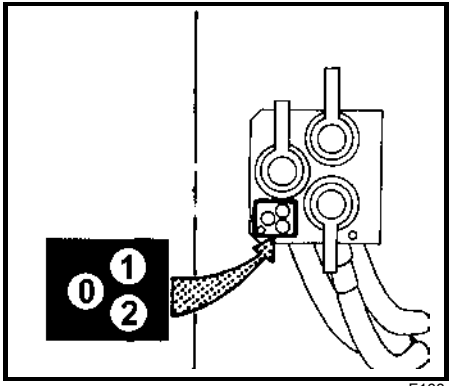

F168

FRONT OUTLETS OF THE OUTER HYDRAULIC CIRCUIT

They are installed on a panel in the right front part of the tractor. Their installation is bound to a three-section distributor. They are designed for the control of frontally attached adapters. The marking of the outlets and their use is the same as in the case of the rear outer outlets.

CONNECTING MACHINES AND IMPLEMENTS TO THE OUTER HYDRAULIC CIRCUIT

Connecting machines and implements consisting of more parts

During work with agricultural machines that consist of more parts (combinators, skids, harrows) and that have side frames hat are hinged to the central frame and during transport are folded to the vertical position by separate hydraulic cylinders controlled by the outer hydraulic circuit of the tractor, the folding of the side frames must always be controlled by the upward (backward) movement of the auxiliary distributor lever. The “lifting” branches of the cylinders must be connected to quick-couplers “2”, “4” or “6”.

Connecting a rotational hydraulic motor

If a rotational hydraulic motor is connected to an outer outlet of the hydraulic system, its return branch must always be connected to quick-coupler “0”. In case of connection of the filling (pressure) branch to quick-coupler 1 or 2 the hydraulic motor is protected by the kick-out function against overloading. This function interrupts the operation of the hydraulic motor at the pressure value in the filling branch of 17.5 - 1.6 MPa.

Connecting a reversing hydraulic motor

A reversing rotary hydraulic motor must be connected to quick-couplers “1” and “2” for functional reasons. However, relief valves must be inserted in both the branches in this case as they can reliably limit the pressure peaks during the stopping of the machine. The oil return lines from these valves are connected to quick-coupler "0".

ELECTRO-HYDRAULIC SYSTEM

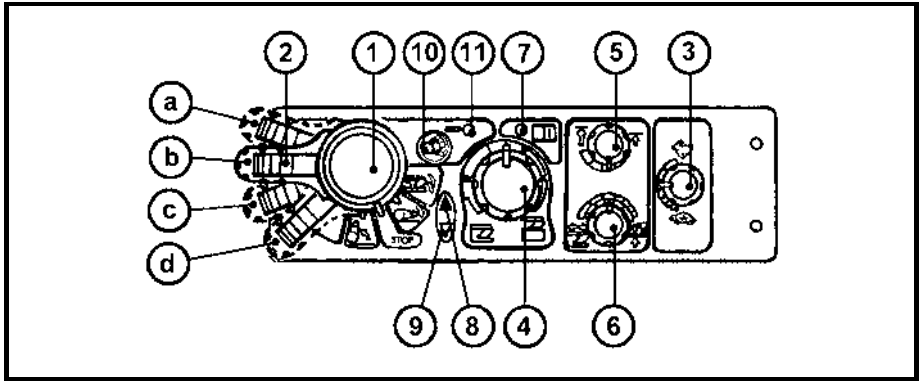

F_02_162

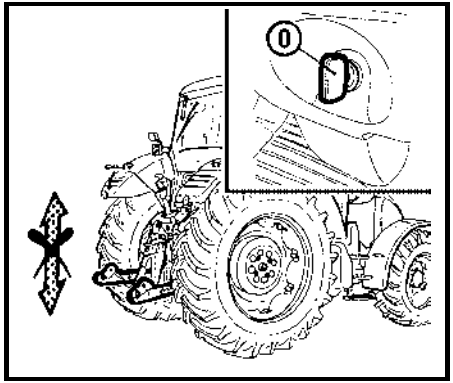

F_02_188

CONTROL ELEMENT FUNCTIONS

1. Switching of lifting
   a -Transport, lifting
   b -STOP
   c -Adjustment, lowering (working)
   d -Free position, quick sinking
   - Spring-controlled automatic return of the lever to position (c)
2. Blocking (in the transport position)
3. Lowering speed
4. Setting the position of the lifting device
5. Upper position limitation
6. Stepless control setting (power → positional)
7. LED - diagnostic
8. LED - lifting
9. LED - lowering
10. Compensator switching (vibration dampening)
11. LED - vibration dampening “ON”

EQUIPMENT “OFF”

Electric installation deactivated with the key of the switching box. The electronic system is off, the lifting device is blocked.

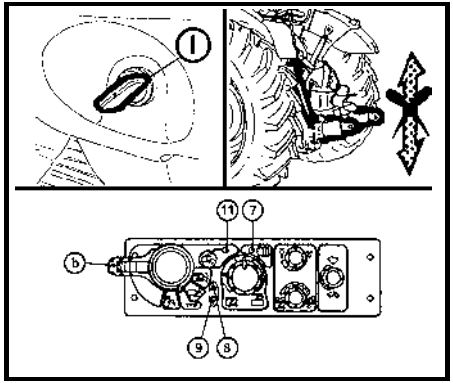

F_02_164

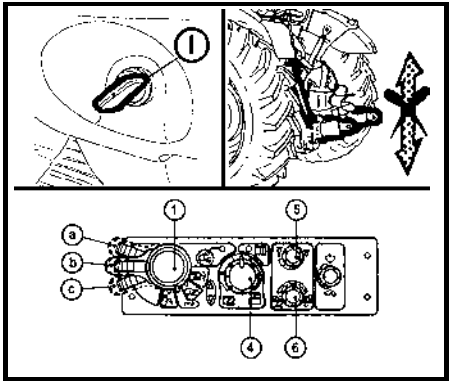

F_02_163

BLOCKING CANCELLATION

When you switch on the electric installation with the key of the switching box (I), the lifting device remains blocked electronically - the lifting and lowering function is deactivated; on the EHR-B control panel the diagnostic LED (7) and the vibration dampening LED (11) shortly light up - the system self-test is in progress. The lifting LED (8) and the lowering LED (9) are off. After a short time permanent illumination of the diagnostic LED (7) indicates the state of EHR-B blocking.
If the diagnostic LED (7) is permanently illuminated, the control circuits are disconnected.

The engine can only be started if the engine (1) is in position (b).

The EHR-B electro-hydraulic system is only active when the engine is started.
Activation of the EHR-B system is only possible when the lubrication indicator has gone off.
The blocking can only be cancelled (system activated) with the engine running by moving the lifting lever (1) to position (a) - short-time switching is sufficient.
By moving the lever (1) to position (c) you will bring the three-point hitch to the position corresponding to the element setting, i.e. the current position of controls (4), (5), (6).

After the activation of the system EHR-B first for safety reasons limits the lifting speed of the hydraulic arms.
When the hydraulic arms first reach the selected position, this safety limitation is cancelled and then the lifting speed of the hydraulic arms is normal.

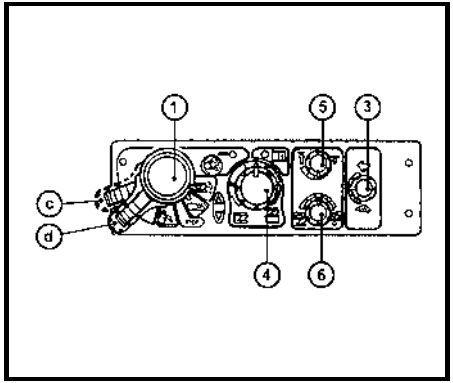

F_02_165

QUICK SINKING

Lever (1) in position (d) - free position. You must hold the lever in this position; after releasing the lever will return to position (c) - the system works in accordance with the setting of controls (3), (4), (5) and (6).

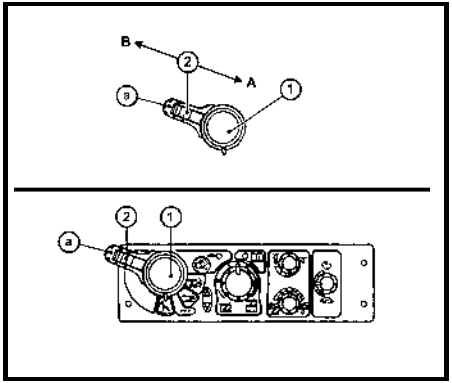

F_02_166

TRANSPORT OF IMPLEMENTS

Shift the lifting lever (1) to position "a" and block it with the moving latch (2).

Blocking the lifting lever (1) by the moving latch (2) in position (a):

A - Lever movement blocked

B - Lever movement not blocked

When the tractor with an attached implement is stopped, the implement must be lowered onto the ground (it must not be left in the lifted position).

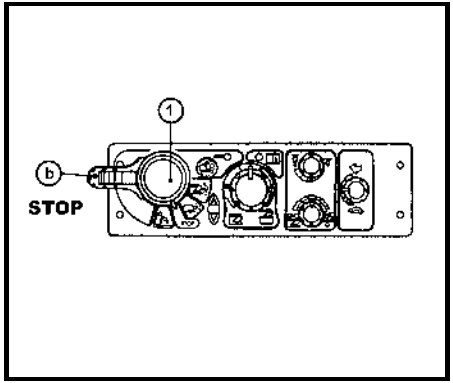

F_02_167

STOP POSITION

By moving the lever (1) to position (b) - STOP position - you will immediately stop the movement of the three-point hitch.

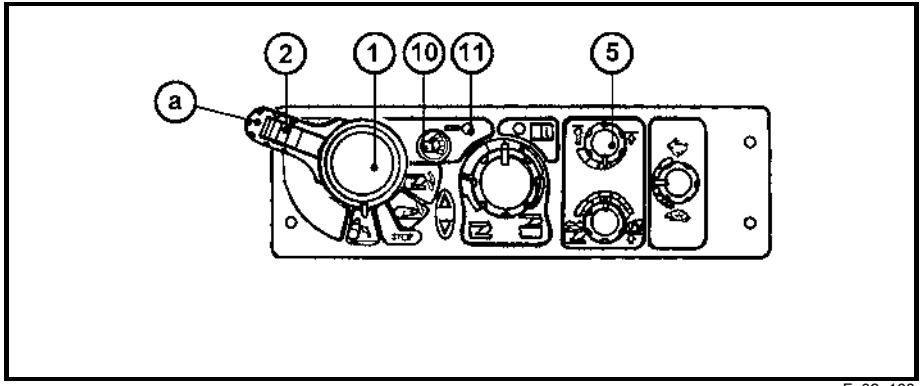

F_02_168

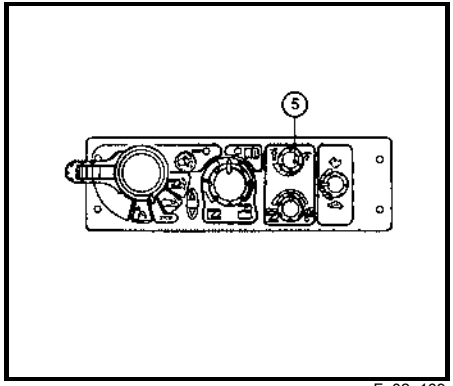

F_02_169

VIBRATION COMPENSATOR (DAMPER)

It is used during transport of a heavy implement attached to the rear three-point hitch. After activation of the vibration compensator (10) the arms of the rear three-point hitch sink by approx. 4%, which allows oscillation of the arms in the range of approx. 8% of the lift. The upward oscillation is always limited by the position of the upper position limiter (5).
Advantages of active dampening of vibrations during transport of a heavy implement attached to the rear three-point hitch.

1. Increased operation safety (the steering axle is not unloaded so much
2. Stabilization of the transported implement
3. Reduced dynamic stress of the hydraulic system and the rear three-point hitch

During the adjustment of the hitch for a single-axle semi-trailer the vibration compensator must be off.

LIMITATION OF THE UPPER POSITION OF THE THREE-POINT HITCH

It is activated with the control (5). The limitation can be implemented in the upper half of the three-point hitch lift.

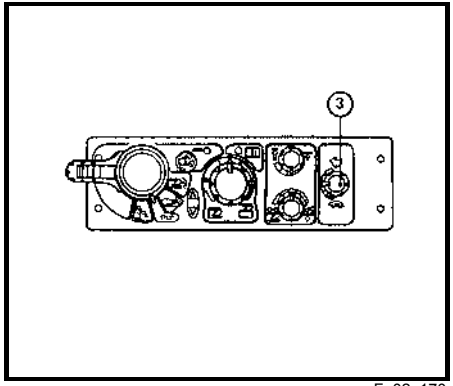

F_02_170

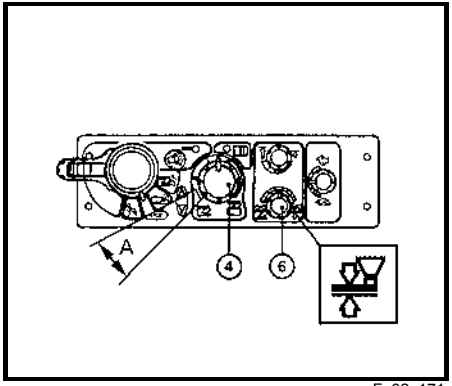

F_02_171

LOWERING SPEED

The lowering speed of the three-point hitch is set with the control (3).

Symbol of the maximum lowering speed

Symbol of the minimum lowering speed

In the vibration dampening mode and during the use of the rear control buttons the lowering speed setting is out of function.

FREE POSITION

For permanent work with free hydraulic system, e.g. during work with a plough with a support wheel the position of the control (4) under the indication (A) and the position of the control (6) at the positional control symbol is used.

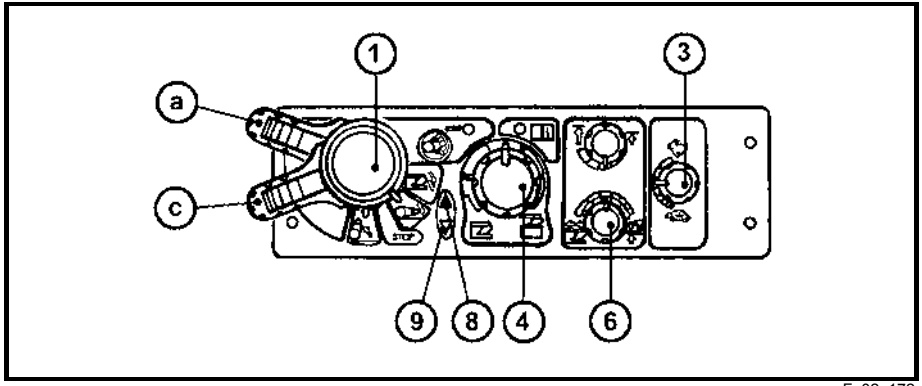

F_02_172

WORK IN THE FIELD

Perform the steps described in the “Blocking cancellation” section and set the required position of the elements with regard to the character of the planned work. The control (4) is used to achieve the depth of the implement. To set the control type and their combination use the control (6).

Power control symbol

Positional control symbol

The control activity (lifting and lowering) can be monitored with the use of the indication diodes (8) and (9). At the dead point shift the lever (1) to position (a) and after reversing of the direction move it to position (c) again. The control system will return to the previous working position (ploughing memory). The control (3) is used to set the required lowering speed.

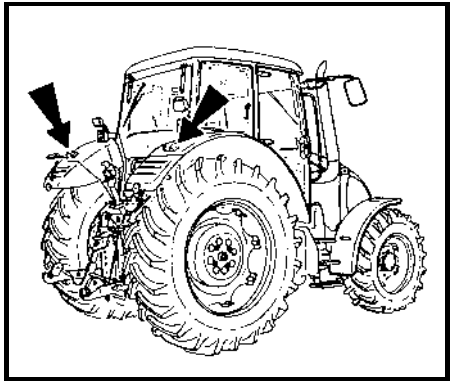

F_02_98

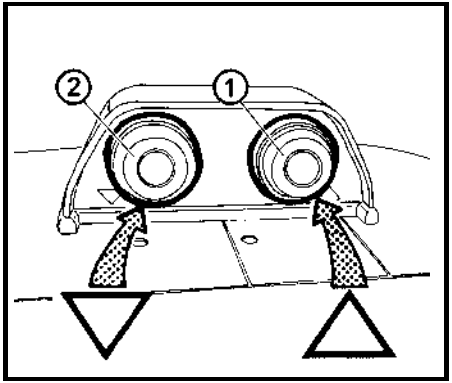

F_02_78

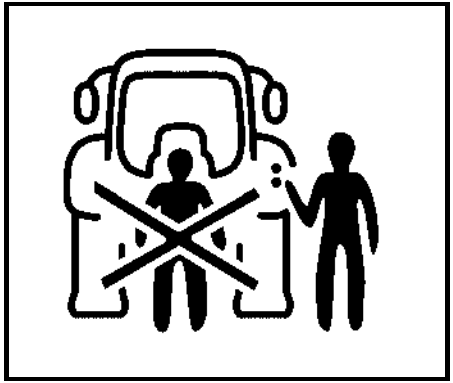

F_02_65

USING THE REAR CONTROL

The rear control is used to connect and disconnect implements. The lifting switching lever (1) on the EHR-B electro-hydraulic control panel must be in position (b) or (c). The designation symbols of buttons on both the tractor fenders correspond to the movement direction of the three-point hitch after their pressing. The movement only lasts as long as the button is held.

Every use of the rear control causes blocking of the control system and the “Blocking cancellation” must be repeated - see page 130.

EXTERNAL CONTROL BUTTONS OF THE ELECTRO-HYDRAULIC SYSTEM

1.Lifting
2.Lowering

The movement only lasts as long as the buttons are held.

The external control buttons of the electro-hydraulic system are functional without prior activation of the system.

USING THE BUTTONS

When handling the three-point hitch with the external control buttons the operator must stand out of reach of the connected implement to avoid being caught or injured by the implement.

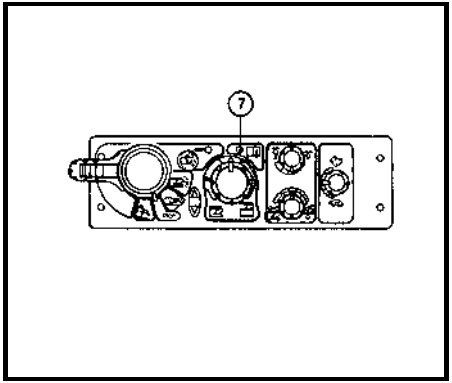

F -02 -173

INDICATION OF EHR-B ERRORS

The electronic part of the electro-hydraulic system continuously checks proper functioning of the system. Possible errors are indicated by repeated flashing combinations of the diagnostic LED (7).

After the remedy of the error the diagnostic LED (7) goes off.

Permanent illumination of the diagnostic LED (7) indicates the state of blocking of the electro-hydraulic system.

DESCRIPTION OF SIGNALS OF EHR-B ELECTRO-HYDRAULIC SYSTEM ERRORS

Flashing combination of the diagnostic LED (7).				Error category	Error description
Long pause	No. of flashes	Short pause	No. of flashes		
	1x		1x	Serious error	Error with internal safety shutdown of the electro-hydraulic system - the electro-hydraulic system is out of operation - the work with the tractor must be stopped
	1x		2x		
	1x		3x		
	1x		4x		
	1x		5x		
	1x		6x		
	2x		2x	Moderately serious error	Error with internal safety shutdown of the electro-hydraulic system - the electro-hydraulic system is out of operation
	2x		3x		
	2x		4x		
	2x		8x		
	3x		1x	Minor error	The electro-hydraulic system works with a limitation resulting from the error type
	3x		2x		
	3x		4x		
	3x		6x		

Have EHR-B errors repaired by a specialized workshop.

ELECTRO-HYDRAULIC SYSTEM

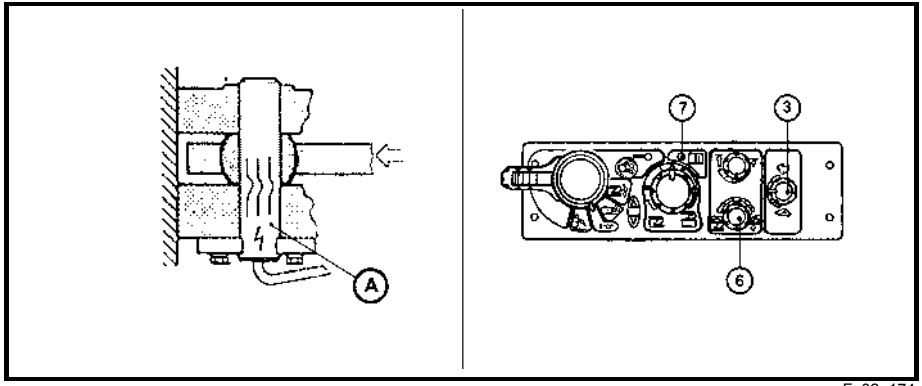

F_02_174

DESCRIPTION OF MINOR ERRORS OF THE EHR-B ELECTRO-HYDRAULIC SYSTEM					
Flashing combination of the diagnostic LED (7).				Error location	Possible cause of the error
Long pause	No. of flashes	Short pause	No. of flashes		
	3x		1x	Right dynamometric pin (A)	Faulty dynamometric pin
	3x		2x	Left dynamometric pin (A)	Faulty contact or interrupted conductor of the dynamometric pin
					Short-circuit of the dynamometric pin conductor Possible overloading of the dynamometric pin
	3x		4x	Lowering speed control (3)	Faulty potentiometer of the control (3) Faulty contact or interrupted conductor of the control
	3x		6x	Control setting switch (6)	Faulty potentiometer of the switch (6) Faulty contact or interrupted conductor of the switch

HITCHES

HITCHES

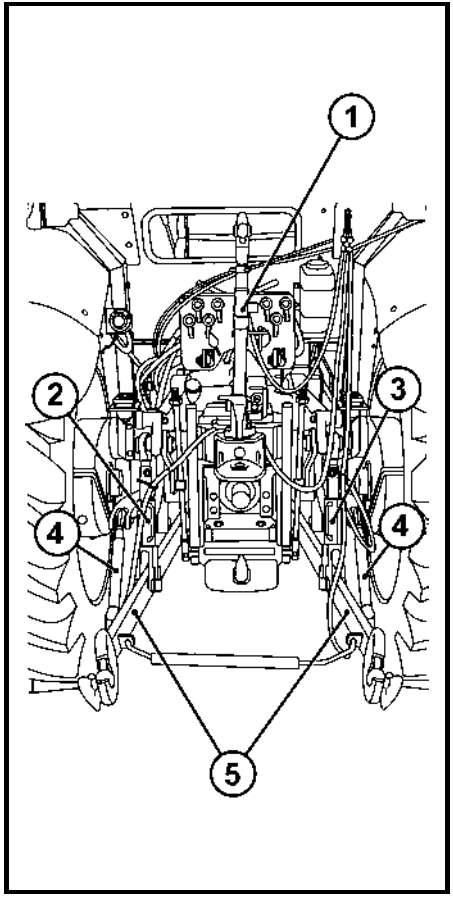

E451

REAR THREE-POINT HITCH

It is intended for attaching carried or semi-carried agricultural machines and implements with hitching points of ISO category II.

Category II.	
Hitch axis length	870 mm
∅ of openings of connecting balls of the lower draw-bars according to ISO	28 mm
∅ of the upper draw-bar opening	25 mm

1. Upper draw-bar
2. Left lifting draw-bar
3. Right lifting draw-bar
4. Limiting draw-bars
5. Lower draw-bars

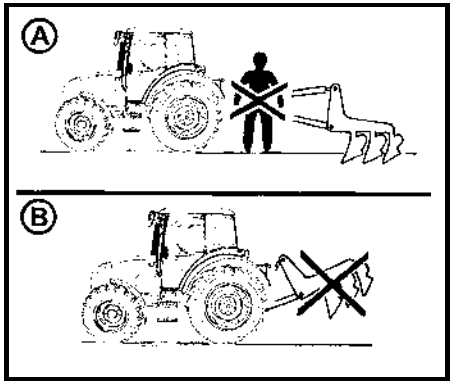

G452

SAFETY PRINCIPLES OF WORKING WITH THE THREE-POINT HITCH

⚠ *Persons that are not authorized to work with the attached implement must not stand between the tractor and the hitched machine (implement) - (A). Do not park the tractor with an attached implement in the lifted position (B). During a drive without an implement the lower draw-bars (5) must be connected with springs and the upper draw-bar (1) must be inserted into the spring suspension! During transport of implements the limiting draw-bars (4) of the lower draw-bars must be adjusted in such a way to avoid unwanted lateral movement of the implement!*

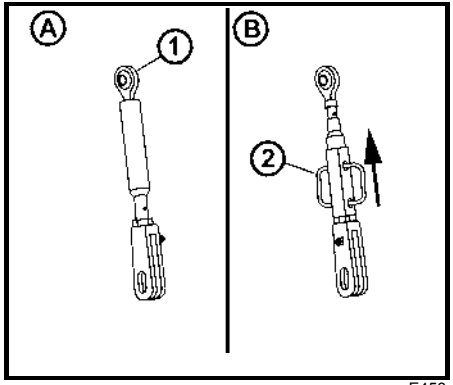

E453

HEIGHT ADJUSTMENT OF THE LIFTING DRAW-BARS

Lifting draw-bar - see fig. (A):
After disconnecting the upper end of the lifting draw-bar from the pin of the hydraulic arm make the adjustment by turning the lug (1).

Lifting draw-bar - see fig. (B):
Extend the capstan (2) in the arrow direction and make the adjustment by turning the capstan.

Depending on the equipment of the tractor both the draw-bars may be designed as in fig. (B).

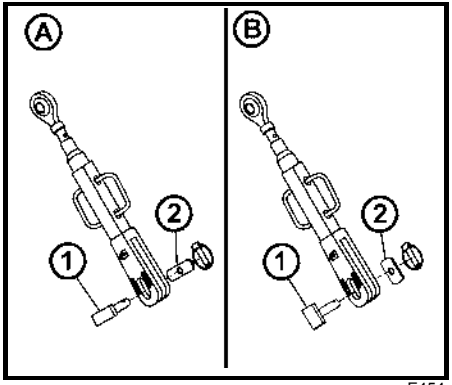

E454

FIXED AND FREE POSITION OF THE LOWER HYDRAULIC DRAW-BARS

Fixed position of the lower hydraulic draw-bars (A):
The pin head (1) and washer (2) are installed horizontally.

Free position of the lower hydraulic draw-bars (B):
The pin head (1) and washer (2) are installed vertically.
The free position enables free connection of the tractor and implement. In this case both the draw-bar ends may move freely against each other as regards their height.

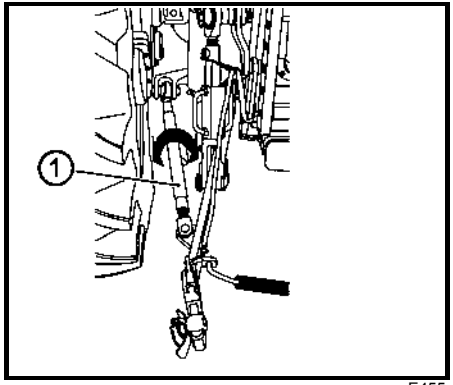

E455

LIMITING DRAW-BARS

The limiting draw-bars - stabilizers (1) limit or completely prevent lateral swinging of the lower draw-bars.
The adjustment of the left and right limiting draw-bar is performed by turning of the draw-bar pipe, see arrow.

⚠ *Both the limiting draw-bars must always be installed on the tractor.*

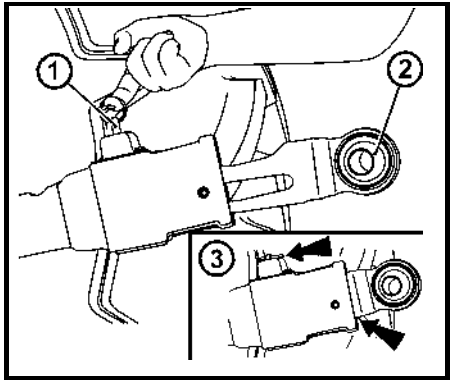

E459

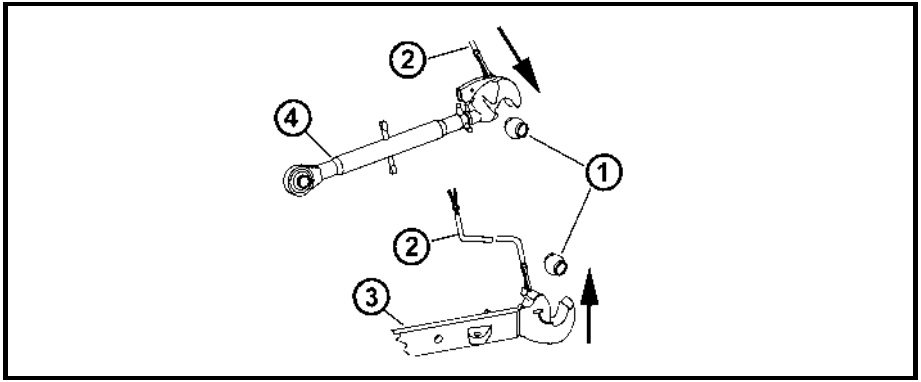

E460

∗LOWER DRAW-BARS WITH EXTENSIBLE END PIECES

The lower draw-bars of the hitch are equipped with semi-automatic extensible CBM end pieces. They facilitate attaching of implements to the tractor. After removing of securing pegs (1) extend the end pieces (2). The extended end pieces are attached to the fixing pins of the carried implement.

After attaching the carried implement release the hydraulic arms. By lowering and the tractor reversing the end pieces (2) will slide into the draw-bars and will be automatically secured in the working position by the securing pegs (1).

Always check the position of the extensible end pieces and the securing pegs, see fig. (3).

∗LOWER DRAW-BARS WITH CBM HOOKS

The lower (3) and upper (4) draw-bars of the hitch are equipped with CBM hooks.

First, suspension CBM balls (1) must be fitted to the implement and the limiting draw-bars must be used to set the distance between the lower draw-bars of the hitch (3).

After reversing and subsequent lifting of the three-point hitch its lower draw-bars (3) are connected to the implement and then the driver connects the upper draw-bar (4) of the three-point hitch from the cab.

When disconnecting the implement release the hooks, with the control wires (2) lift the upper draw-bar (4) and by lowering the three-point hitch disconnect the lower draw-bars (3).

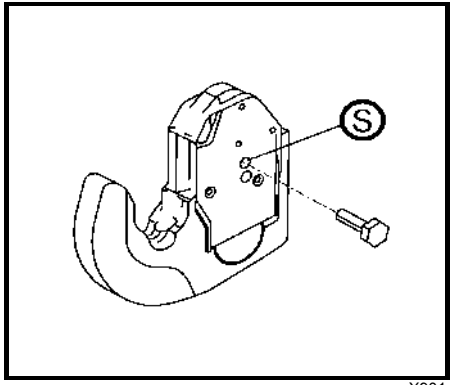

X901

SECURING THE LOWER DRAW-BARS WITH CBM HOOKS

For especially demanding working positions (aggregation with heavy machines on slopes or aggregation with machines overhanging to one side) we recommend you to securely lock the lower draw-bar hook by inserting an M8 screw in the opening (S) and locking it with a nut.

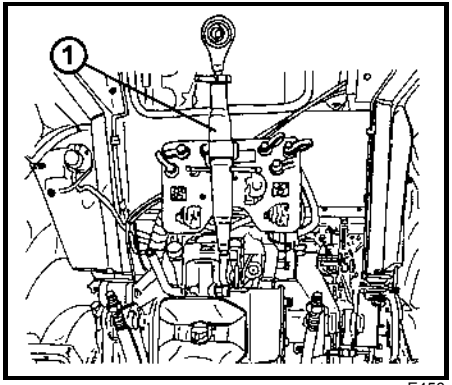

E456

UPPER DRAW-BAR

The upper draw-bar (1) has adjustable length. It is attached to the tractor to the console openings.

⚠ *When extending the upper draw-bar you must make sure that both the joints are unscrewed from the draw-bar pipe to the same length.*

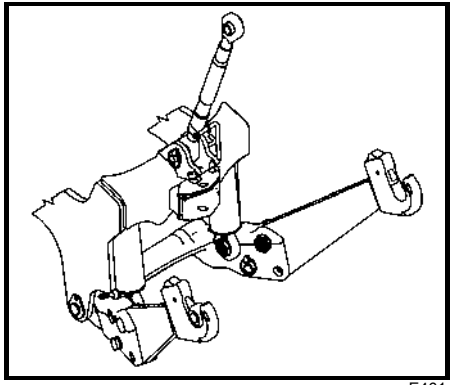

E461

*FRONT THREE-POINT HITCH

It is designed for attachment of frontally carried agricultural machines and implements in accordance with ISO 8759-2.

During transport of a carried implement the hitch must always be hydraulically locked in the lifted position with valves that are installed on the left side of the tractor over the front axle.

This hydraulic lock is recommended even in case no machine is attached to the three-point hitch.

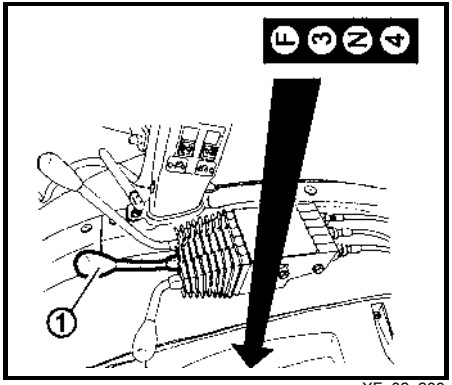

XF_02_209

FRONT THREE-POINT HITCH CONTROL

The hitch is equipped with two single-acting hydraulic cylinders that are supplied with oil from the integrated hydraulic distributor. The lifting and lowering is controlled by the control lever of the integrated distributor (1).

Position 3	Lifting
Position 4	Lowering
Position N	Hitch lock

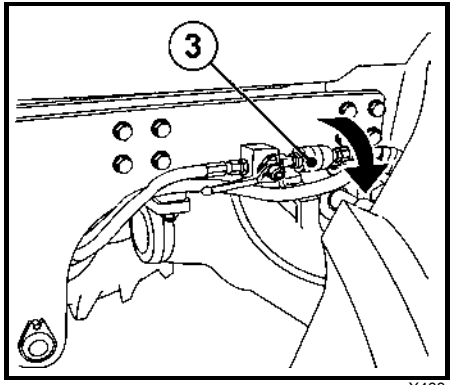

X463

ADJUSTING THE LOWERING RATE OF THE FRONT THREE-POINT HITCH

Before the start of work with an implement attached to the front three-point hitch it is recommended to adjust the time necessary to lower the implement from the highest to the lowest position to 1 - 1.5 s by setting the throttle valve. By turning the valve body to the left (in the arrow direction) you will increase the lowering speed. During the adjustment the valve levers of the front hitch must be directed horizontally.

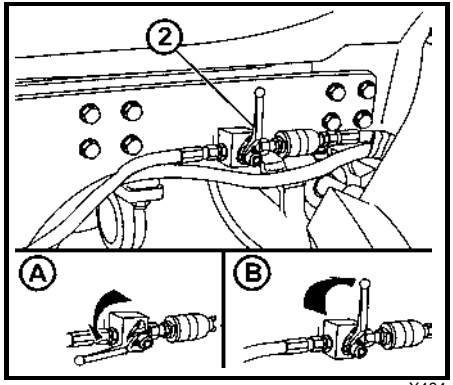

X464

HYDRAULIC LOCK OF THE FRONT THREE-POINT HITCH

Hydraulic locking of the front three-point hitch is performed in any position of the hydraulic cylinders with the ball valve in the front part of the tractor (2).

A Free position
Valve levers are in the horizontal position
- The hitch can be controlled from the cabin

B Locked position
Valve levers are in the vertical position
- The hitch is locked

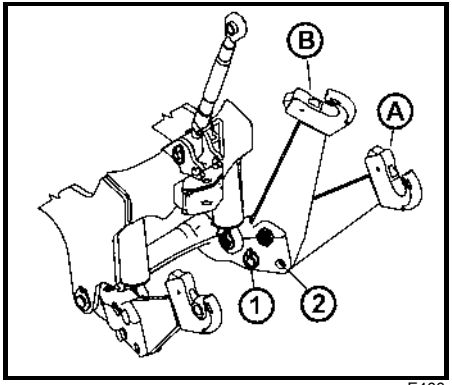

E466

WORKING AND TRANSPORT POSITION OF THE FRONT THREE-POINT HITCH

A Working position of the front three-point hitch

B Transport position of the front three-point hitch

Changing the position of the draw-bars of the front three-point hitch:

1. Release and remove the pin (1) from the opening.
2. Lift the arm from position (A) to position (B).
3. Lock the arm by inserting the pin (2) in the opening (2) and secure the pin.

Only insert the pin in the openings, never check whether the opening is free with your fingers!

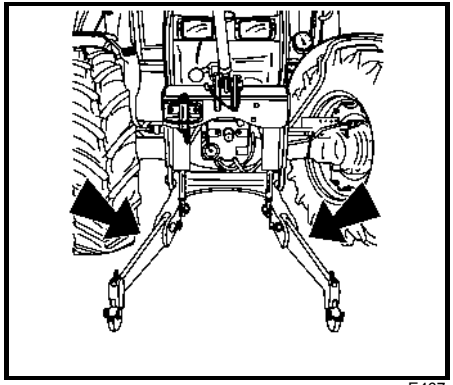

E467

DRIVING WITH AGRICULTURAL MACHINES ATTACHED TO THE FRONT THREE-POINT HITCH

The maximum permissible speed of the tractor with agricultural machines attached to the front three-point hitch is 15 km/h.
If no implement or weight is attached to the front three-point hitch, we recommend you to lift the lower lifting draw-bars to the transport position.

NOTES

WHEEL TRACK CHANGE

Page

WHEEL TRACK CHANGE

POSSIBLE ADJUSTABLE TRACKS OF THE FRONT WHEELS OF THE FRONT DRIVING AXLE OF THE TRACTORS

Used tyres				Rim position
12.4-24 12.4R24	13.6R24 380/70R24	12.4-28	14.9-24 14.9R24 420/70R24	
Front wheel tracks in mm				
1590*	-	-	-	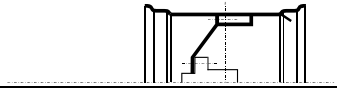
1645	1730		1730	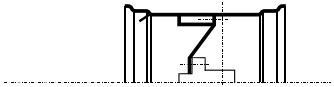
1740	1655	1730	-	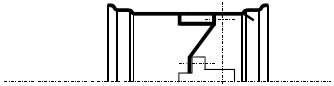
1800	1880	1810	1880	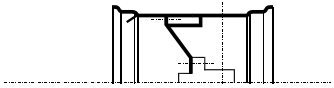
1890	1810	1880	1810	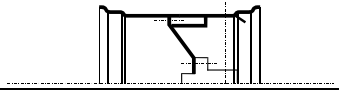
1945	2030	1955	2030	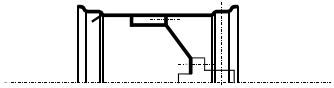
2040	1955	2030	1955	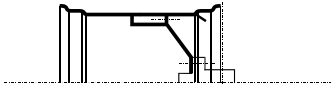

Note: Use of different tyre dimensions with individual tractor types - see chapter Main technical parameters.

Tighten the front wheel nuts with the torque of 250 - 290 Nm.

Tighten the nuts connecting the wheel bead with the wheel disc with the torque of 200 - 220 Nm.

You can change the wheel track by changing the position of the rim and disc.

First, secure the tractor against moving, lift the axle with a lifting jack and support it.

- Loosen the nuts of the screws connecting the disc with the rim and remove the screws.
- Change the track by setting the rim in the required position.
- Re-install the screws with washers and secure them with nuts. Tighten the nuts with the torque of 230 - 250 Nm.
- After every loosening of a bead connection tighten the screws to the prescribed value.
- After driving 100 m with the tractor without load re-tighten the connections with the prescribed torque.
- After loading the tractor re-tighten the connections after 3 hours of work.
- After 10 hours of work check the tightening of the nuts of discs and wheel rims again.

WHEEL TRACK CHANGE

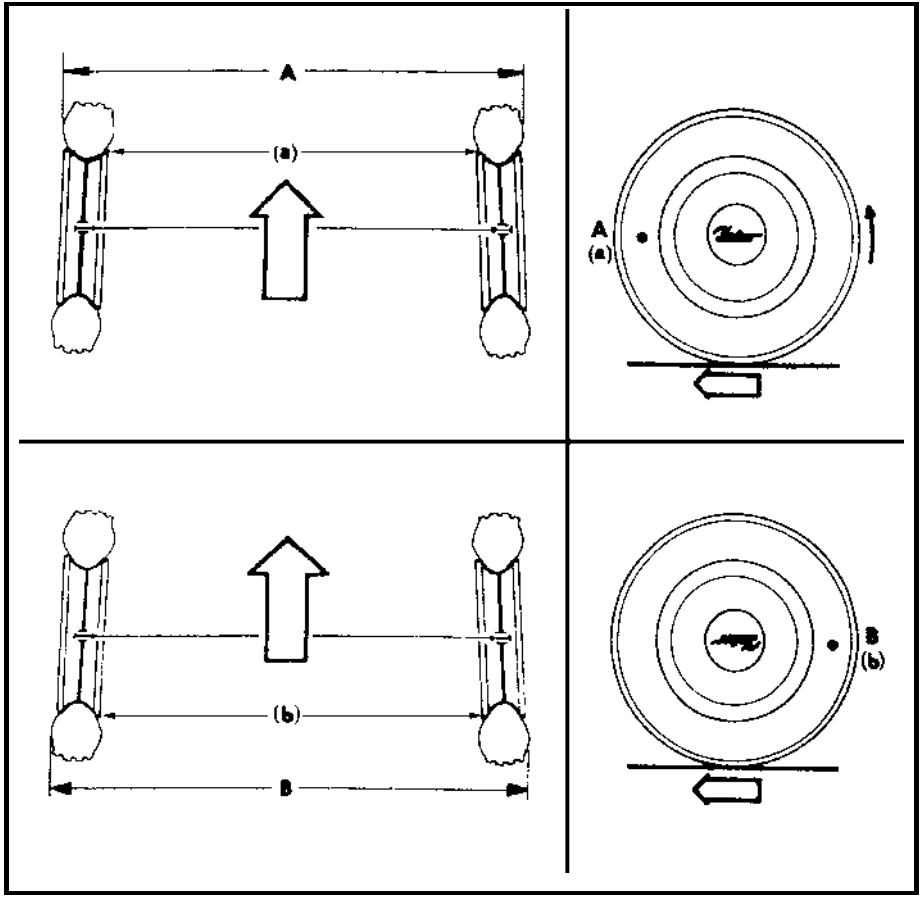

F_02_189

TOE-IN OF THE WHEELS OF THE FRONT DRIVING AXLE

Proper toe-in of the front wheels of tractors with the front driving axle is

0 to 2 mm

and is measured on the front wheel hub flanges (if the front wheels are installed, you can measure toe-in on the wheel rims).

Toe-in **"S"** is determined by the difference of the measured values: **S = b - a**.

WHEEL TRACK CHANGE

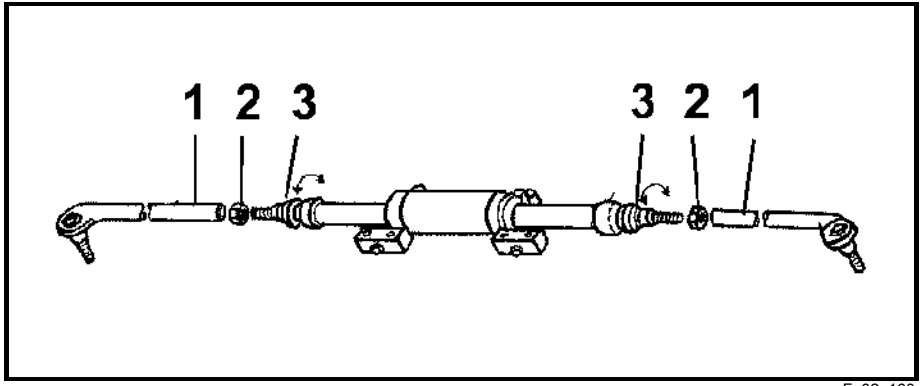

F_02_160

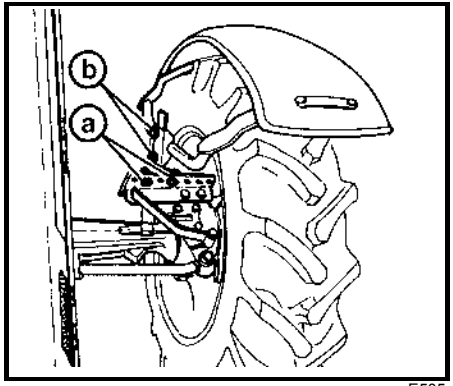

E505

ADJUSTMENT OF TOE-IN OF THE WHEELS OF THE FRONT DRIVING AXLE

- Set the wheels symmetrically with the longitudinal axis of the tractor.
- At the front on the horizontal plane of the wheel axes measure, in accordance with fig. F_02_189, the distance between the rims. Mark the place of measurement.
- Drive the tractor to move the marked places to the horizontal plane of the wheel axes at the back (turning by 180°) and measure the distance between the marked places again.
- Release the locking nuts of the heads of the ball screws (2) of connecting rods of the steering at the hydraulic cylinder.
- Adjust the toe-in value by turning the shank of the ball screw (3). Perform the adjustment of both the joints symmetrically to maintain the same turning radius at both the sides (perform the measurement at the rim sides).
- Tighten the locking nuts of the heads of the ball screws (2) with the torque of 122 - 136 N. The upper surfaces of the heads (1) must be parallel.

FENDERS OF THE FRONT DRIVING AXLE

The fenders are installed on adjustable holders that can be adjusted laterally (by removing screws “a” to other openings) as well as vertically (by removing screws “b” to other openings) in accordance with the required wheel tracks and the type of used tyres.

WHEEL TRACK CHANGE

Without the front three-point hitch					
		without fenders		with fenders	
Tyres	Wheel track (mm)	Right stop A (mm)	Left stop A (mm)	Right stop A (mm)	Left stop A (mm)
12.4-R24	1590	38	31	37	37
	1740	28	21	32	31
	1890	17	10	23	21
380/70R24	1730	34	28	40	40
13.6-R24	1880	23	17	31	29
12,4-28	1730	29	27	40	40
10PR	1880	18	18	31	31
14,9-24	1730	33	30	41	41
420/70R24	1880	22	18	31	32

With the front three-point hitch					
		without fenders		with fenders	
Tyres	Wheel track (mm)	Right stop A (mm)	Left stop A (mm)	Right stop A (mm)	Left stop A (mm)
12.4-R24	1590	50	47	50	47
	1740	33	33	33	35
	1890	19	20	19	25
380/70R24	1730	43	39	43	45
13.6-R24	1880	28	27	28	34
12,4-28	1730	41	38	38	45
10PR	1880	26	28	28	36
14,9-24	1730	44	41	44	46
420/70R24	1880	29	31	29	36

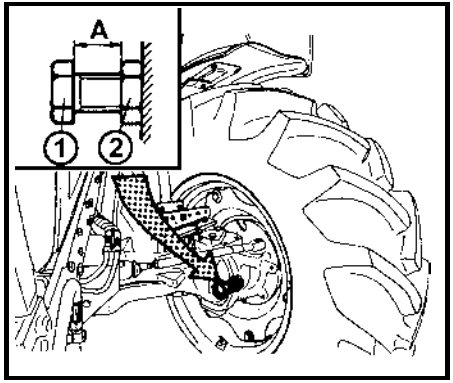

F216

SETTING THE WHEEL STOPS OF THE FRONT DRIVING AXLE

Set the stops after every change of the wheel track of the front driving axle in accordance with the provided tables after loosening the nut (2) and releasing or tightening the screw (1).

WHEEL TRACK CHANGE

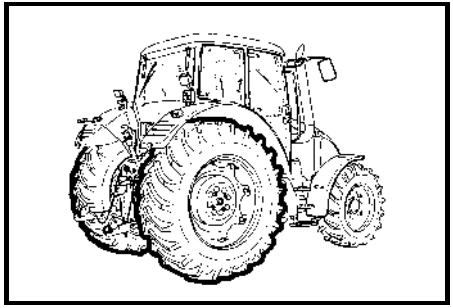

F_02_99

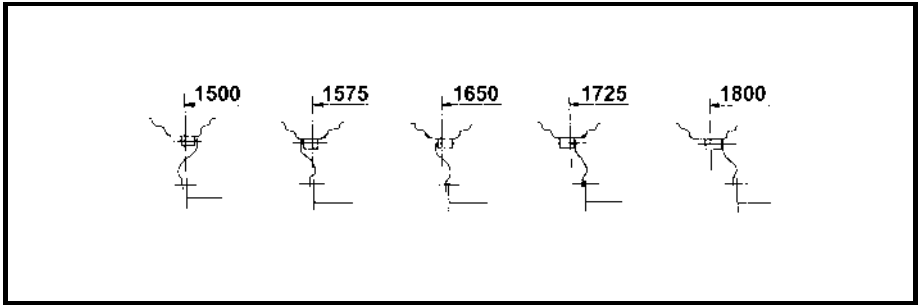

F218

REAR WHEEL TRACK CHANGE

Depending on the width of the rear tyres you can set the wheel tracks in the following range:

Rear tyre width	Wheel track (mm)
12,4-38	1425-1800
13,6-38	1425-1800
18,4-38	1650 - 1800
480/70R38	1575 - 1800
520/70R38	1650 - 1800
16,9-34	1500 - 1800
16,9-38	1575 - 1800
18,4-34	1500 - 1800

Note: Use of different tyre dimensions with individual tractor types - see chapter Main technical parameters.

REAR WHEEL TRACK ADJUSTMENT

Rear wheel tracks are adjustable with the step of 75 mm and the adjustment is performed by changing the position of the rim and disc with the rear part of the tractor lifted so that the wheels can rotate freely.

⚠ *Before the lifting do not forget to secure the tractor against moving by wedging the front wheels.*

After changing the wheel track tighten all the screws connecting the disc with the rim with the torque of 200 - 220 Nm and the nuts of the screws connecting the disc with the wheel shaft with the torque of 400 - 470 Nm.

- After every loosening of a bead connection tighten the screws to the prescribed value.
- After driving 100 m with the tractor without load re-tighten the connections with the prescribed torque.
- After loading the tractor re-tighten the connections after 3 hours of work.
- After 10 hours of work check the tightening of the nuts of discs and wheel rims again.
- Until reaching the first 100 hours of work perform frequent checks of tightening of the nuts of the discs and rims of the front and rear wheels (at least 6 times in the course of the first 100 hours of work).
- Then, always check the tightening of the nuts of the discs and rims of the front and rear wheels after every 100 hours of work.

BALLAST WEIGHTS

Ballast weights are necessary to additionally load the tractor axles and to ensure manoeuvrability and stability of the tractor.

BALLAST WEIGHTS

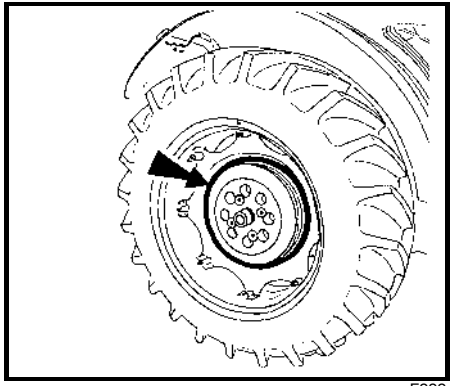

F222

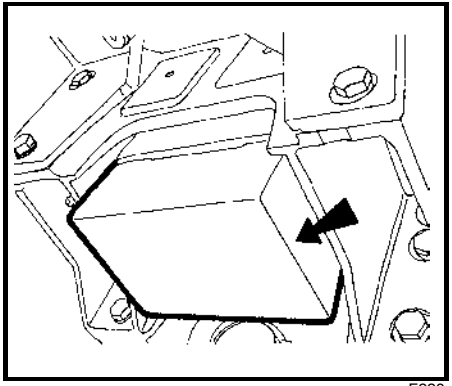

F223

∗REAR WHEEL WEIGHTS

Combination of weights (pcs)	Mass of weights (kg)	
2+4	**2**x25 + **4**x30	**170**
2+6	**2**x25 + **6**x30	**230**
2+10	**2**x25 + **10**x30	**350**

BOTTOM WEIGHTS

Combination of weights (pcs)	Mass of weights (kg)	
2	**2**x34	**68**

They are installed in case the tractor is not equipped with the front PTO into the frame tub casting cavity with screws that are accessible after removal of the battery holder.

BALLAST WEIGHTS

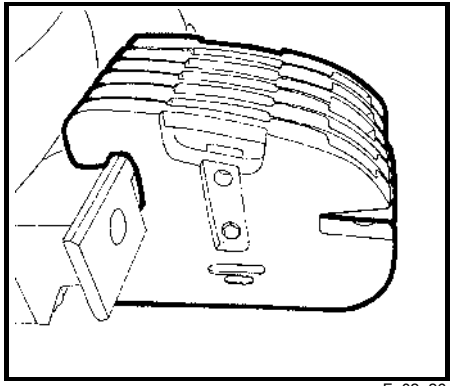

F_02_26

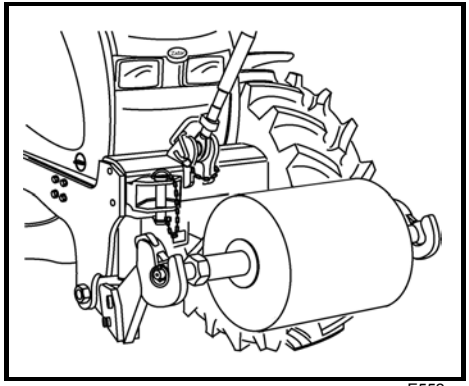

E552a

∗ FRONT WEIGHTS

Front weights		
Combination of weights (pcs)	Mass of weights (kg)	
2+2	**4**x50	**200**
3+3	**6**x50	**300**
5+5	**10**x50	**500**
7+7	**14**x50	**700**

The front weights of the can type are suspended in the tool carrier. They are protected from lateral movement with a pin inserted between the central weights. The other weights are attached to the central ones with two clamps.

Note: After the insertion of the pin the front weights and the weight carrier can be used as the front hook for emergency towing of a sunken tractor.

∗WEIGHT OF THE FRONT THREE-POINT HITCH

The weight of the front three-point hitch is made of concrete
Weight mass (kg) **290**

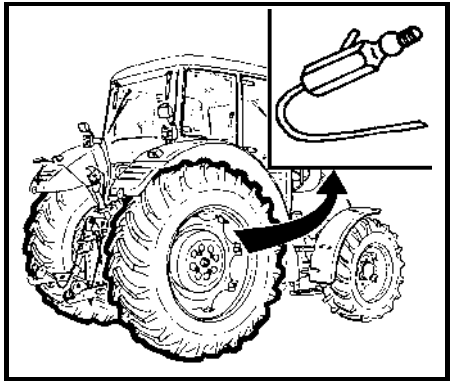

F_02_109

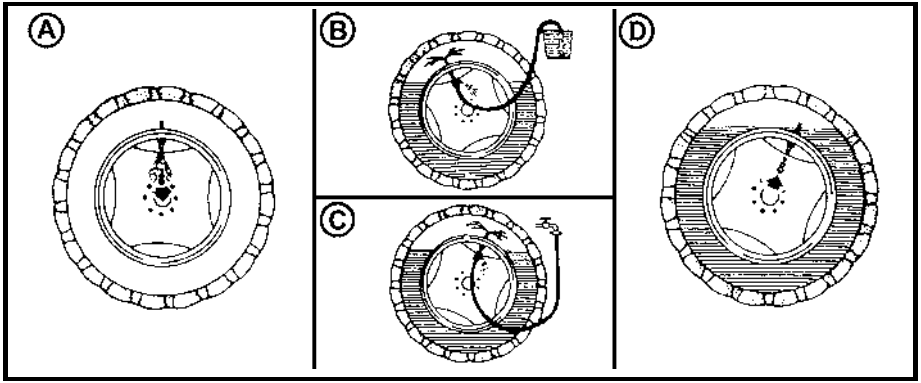

F226

VALVE FOR FILLING TYRE TUBES WITH LIQUID

All the tubes of the rear wheels are equipped with a valve that makes it possible to fill the tubes with liquid with the use of an adapter.

⚠ *Filling the tubes of the front tyres and double mounting of the rear wheels with liquid is not permitted.*

PROCEDURE OF FILLING THE TYRES WITH LIQUID

1. Unload the tyre by lifting the tractor and turn it with the valve upwards (A).
2. Deflate the tyre and unscrew the valve insert.
3. Screw the adapter for water filling on and attach the liquid supply hose to it.
4. Fill the tyre with the prescribed quantity of liquid.
5. For the filling you can use a gravity tank (B) or you can fill the tyre under pressure (C).
6. Remove the hose and unscrew the adapter for water filling.
7. Screw on the valve insert and inflate the tyre to the prescribed pressure.
8. After inflating screw the protective cap on the valve.
9. Fill the other tyre in the same way.

BALLAST WEIGHTS

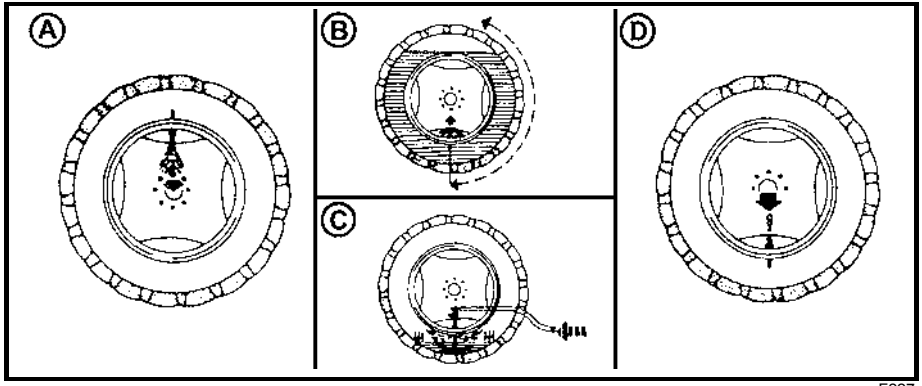

F227

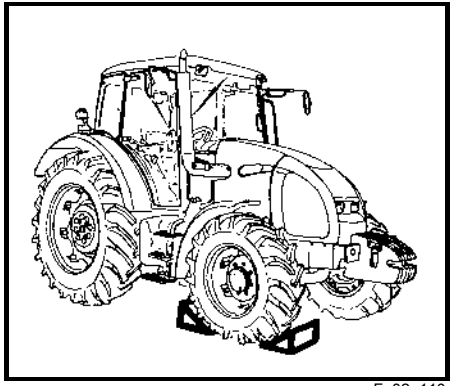

F_02_110

PROCEDURE OF DRAINING LIQUID FROM THE TYRES

1. Unload the tyre by lifting the tractor and turn it with the valve upwards (A).
2. Deflate the tyre and unscrew the valve insert; turn the wheel with the valve downwards.

   ⚠ *During draining of liquid vacuum may occur in the tyre. Therefore, turn the wheel time after time to get the valve to the upper position (B).*

3. Remove the rest of the liquid after screwing on the adapter for water filling by supplying pressurized air (C).
4. Blow out the liquid until it stops running through the tube of the air adapter.
5. Unscrew the adapter for water filling
6. Screw the air part of the valve back on and inflate the tyre to the prescribed pressure.
7. Screw the protective cap on the valve.
8. Drain the liquid from the other tyre in the same way.

WEDGING THE FRONT WHEELS

⚠ *Before lifting the rear wheels do not forget to secure the tractor against moving by wedging the front wheels.*

BALLAST WEIGHTS

MAXIMUM LIQUID WEIGHT (KG) BY TYRE DIMENSIONS

Dimen-sions	**Filling with 75% clean water (l), (kg)**	**Calcium chloride solution**		
		$CaCl_2$ (kg)	Water (l)	**Extra load-ing (kg)**
16.9-34	250	108	166	**274**
16.9-38	290	126	192	**318**
18.4-34	330	144	218	**362**
18.4R-38	385	168	254	**422**
480/70R38	335	146	222	**368**
18.4-38	385	168	254	**422**
520/70R38	390	170	258	**428**

The table mentions values for temperatures down to - 30°C.

BALLAST WEIGHTS

ANTIFREEZE SOLUTION FOR TYRE FILLING

Water for solution preparation	Calcium chloride $CaCl_2$	Hydrated lime	Solution density at 20°C	Freezing point approx.	Total volume	Added weight
(l)	(kg)	(kg)		(°C)	(l)	(kg)
45	11.8	0.21	1.13	-18	50	57
45	13.9	0.23	1.18	-25	50	59
45	15.4	0.25	1.21	-30	50	61

An antifreeze solution may only be used for filling tyres if you have purchases additional tubes! Caution, the tractor is equipped with tubeless tyres by the manufacturer!

Solution preparation:

1.Dry calcium chloride $CaCl_2$ is added to water, never the other way round!

2.The solution is not dangerous, but it is necessary to work carefully with it. Remove spilt drops with clean water.
3.Before filling leave the solution to cool down. Observe the prescribed quantity of hydrated lime.
4.The solution must not get in contact with metal parts and the electric installation! The solution is not harmful for the tube valve.
5.The antifreeze solution with the above mentioned composition must not be used in the cooling system!
6.After draining dispose of the antifreeze liquid as special waste!

NOTES

ELECTRIC INSTALLATION

No additional interventions into the electric installation (connection of other electric appliances) are permissible due to its possible overloading!

ELECTRIC INSTALLATION

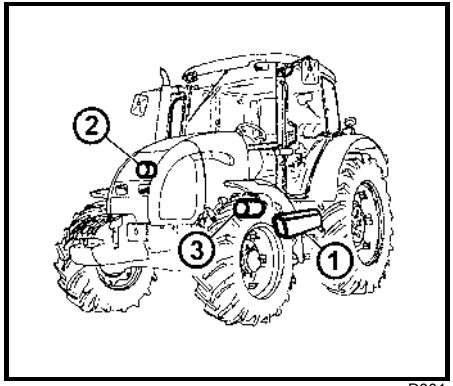

D301

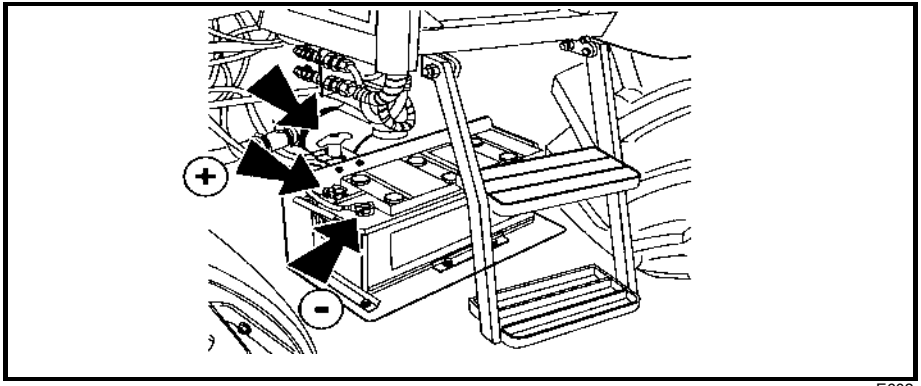

E602

ELECTRIC SYSTEM

Nominal voltage (minus (-) pole grounded)	12 V
Battery (1)	
12V/155Ah	12 V
Alternator with a built-in voltage controller (2)	
14V / 95A	
Starter motor with a reducer (3)	
12V / 3 kW	
Drive V-belts of the alternator and water pump	
AVX10x1385Laservice	

BASIC SERVICE INFORMATION

The battery must always be connected with the “minus” pole to the ground and with the “plus” pole to the alternator. If the battery is connected the other way round, it will destroy the whole semiconductor equipment of the alternator. When starting the tractor with the use of an auxiliary battery, do not forget to connect the terminals “plus” to “plus” and “minus” to “minus”. If you replace a part of the charging circuit, disconnect the battery from the tractor ground (-) with the battery disconnector. This way you will avoid accidental short-circuits on the terminals.

In case of any handling or repair of the started motor the minus pole of the battery must be disconnected and all the shifting levers, incl. the PTO shifting lever, must be in the neutral position (do not forget to check whether the locked PTO switches on the right cabin pillar are off as well to prevent spontaneous start and endangering of the service person's life).

It is forbidden to start the engine by short-circuiting the starter motor terminals.
Only start the tractor from the driver’s seat!

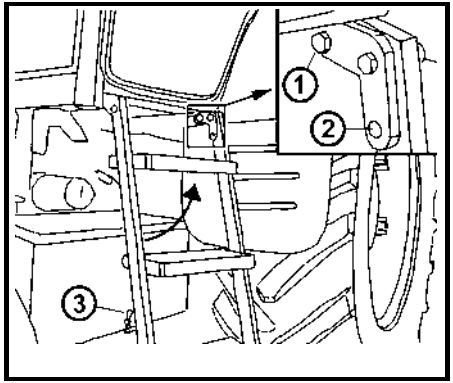

D305

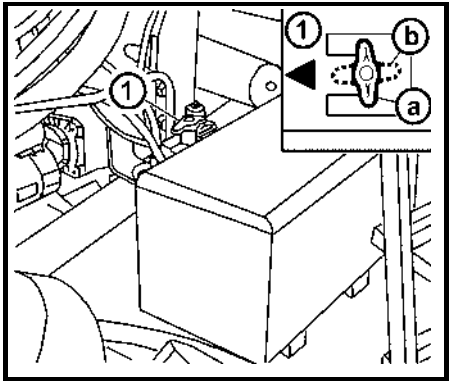

D302

ACCUMULATOR BATTERY

The accumulator battery is installed under the cover on the left side of the tractor under the cab step.
The battery is accessible after folding up of the cab step.

During folding up of the cab step the cab door must be closed.

1- Remove the screw (1).
2- Lift the step in the arrow direction
3- Secure the lifted step with a screw inserted to the opening (2) in the step
4- Remove the safety pin (3)
5- Grasp the bottom edge of the cover and remove it.

BATTERY DISCONNECTOR

The battery disconnector is located at the left-hand side of the tractor near the starter motor.

a- Battery connected
b- Battery disconnected

¨When shutting down the tractor disconnect the battery with the battery disconnector (1). By this you will interrupt the permanent minimum current consumption of the warning light interrupter (approx. 10 mA).

If the tractor is out of operation for a longer period of time, it is necessary to charge the battery at least once every three months due to its spontaneous discharging.

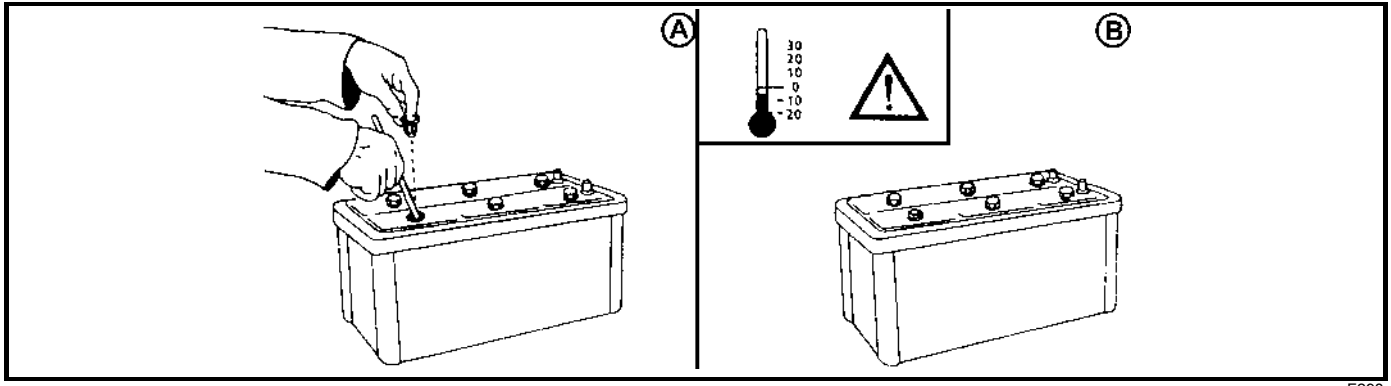

F298

ACCUMULATOR BATTERY MAINTENANCE

Keep the accumulator battery clean and properly fixed to the vehicle. However, the fixing device must not deform the battery case. In the case of polypropylene batteries the electrolyte level must not be below the minimum mark indicated on the case.

Only add distilled water to the battery!

1. *When working with the battery first read the attached manual.*
2. *During work with the battery protect your eyes with goggles or a safety shield!*
3. *The electrolyte is a caustic substance; therefore, handle it with proper care. If your skin or clothes get stained by electrolyte, wash the skin or clothes with water and neutralize them with soap.*
4. *During charging hydrogen is released from the electrolyte on the electrodes. Hydrogen mixed with the air forms an explosive mixture. Therefore, it is prohibited to handle open fire near the battery during charging.*
5. *An explosion may also be caused by a spark created on the disconnection or release of a terminal when the charging circuit is on.*
6. *Keep the battery out of reach of children!*
7. *A discarded battery is dangerous waste for the environment - when buying a new battery hand the old one over to the dealer, who will dispose of it free of charge.*

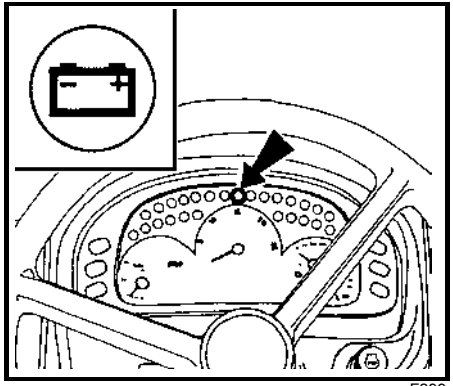

F299

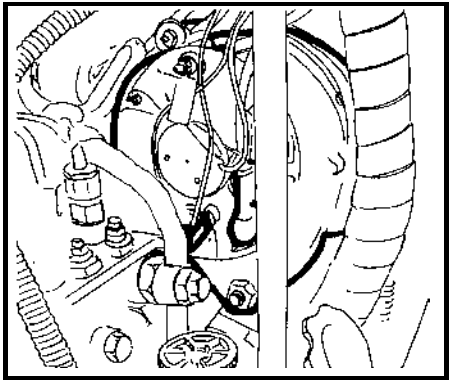

F_02_207

ALTERNATOR

It is accessible after removal of the right side plate. Charging is monitored by the red indicator on the combined dashboard instrument.

If the 12 V 2 W indicator bulb gets burnt, it must be replaced immediately.

During repairs of the tractor by electric welding all the conductors must be disconnected from the alternator. Protect the "+B" conductor from a short-circuit.

ALTERNATOR MAINTENANCE

When washing and cleaning the tractor protect the alternator from penetration of water or diesel fuel!

During operation the alternator must not be disconnected from the battery!

The alternator must never be put in operation without load, i.e. with the conductor disconnected from the "+B" terminal and the "+D" terminal connected. Such a condition may induce an extremely high voltage when the engine speed is increased, which would destroy the semiconductors!

Never short-circuit any alternator terminal during operation!

The alternator must not be additionally excited. Such an intervention would damage the semiconductors.

Ensure perfect electric connection of the alternator terminals and proper grounding of the alternator!

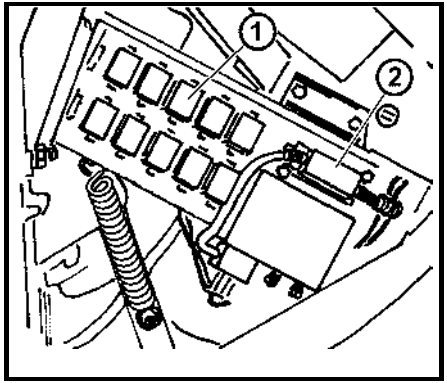

F306

FUSE BOX

It is accessible after removing of the left lid of the steering console.
The fuses (1) are of the knife type and in case of replacement the prescribed fuse value must be observed. In case of repeated replacement of a fuse consult the nearest repair shop.
The glowing fuse (2) is of the band type with the value of 80 A.

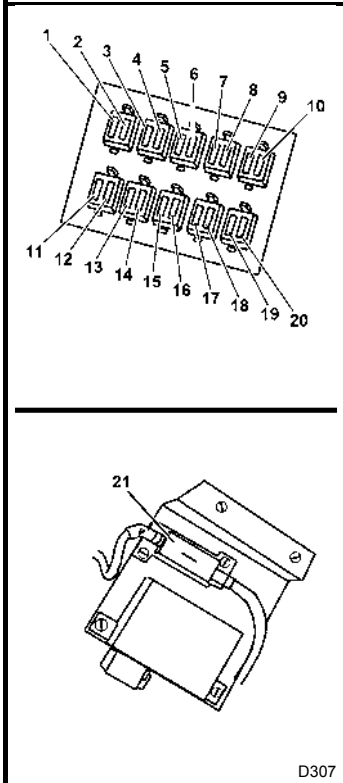

D307

Positions of fuses in the fuse box	Pos.	Fuse size	Protected system
	1	15A	Warning light interrupter Brake lights
	2	15A	Horn, beacon
	3	15A	Front driving axle control, differential lock control, power supply of the dashboard, rear PTO control, multiplier control, EHR control
	4	15A	High beam lights with the indicator
	5	15A	Left position lights, dashboard lighting, registration number lighting
	6	15A	Right position lights, rear working light with the indicator
	7	15A	Right low beam lights, fog light with the indicator
	8	7.5A	Left low beam lights, indicator of lights in the grill / tractor roof
	9	15A	Supplementary lights in the roof
	10	3A	Front PTO Zuidberg
	11	15A	Front and rear wiper, washer, radio “15”
	12	20A	Heating fan, radio “30”
	13	15A	Recirculation, lighter
	*14	7.5A	Air-conditioning (compressor coupling)
	*15	15A	Mirror heating
	*16	15A	Rear window heating
	*17	15A	Driver’s seat compressor
	18	20A	Three-pin socket
	*19	15A	Front working lights in the roof
	*20	15A	Rear working lights in the roof
	21	80A	Glowing

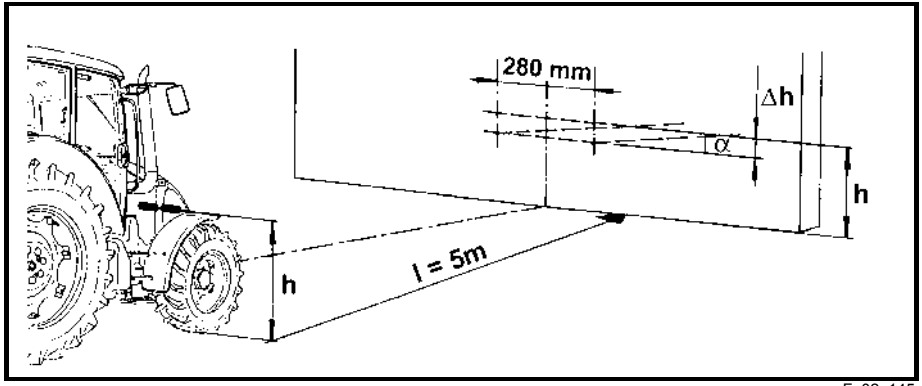

F_02_145

CHECKING THE ADJUSTMENT OF THE FRONT GRILL HEADLIGHTS

During a check on a test wall the tractor must stand on a level surface and the tyres must be inflated to the prescribed pressure. The basic vertical setting is 3.5% at the shipping weight of the tractor. In the horizontal direction the light beams must be parallel with the longitudinal axis of symmetry of the tractor.

l - distance of the test wall from the headlight (5 m)
h - height of the headlight centre above the road surface
Δh - headlight inclination (-3.5 %) to the distance of the test wall = 17.5 cm
α - raising of the outline of an asymmetrical headlight (15%)

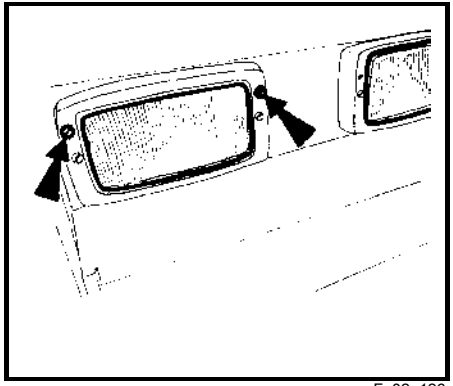

F_02_126

ADJUSTING THE FRONT GRILL HEADLIGHTS

The adjustment is performed simultaneously with both the screws (1) for vertical and horizontal direction of the beam - horizontally ± 2°; vertically +1° to -6°.
Each headlight is adjusted separately. The lamps are replaced by removing from the rear side of the reflector. Due to the confined space release and move or completely remove the starting battery.

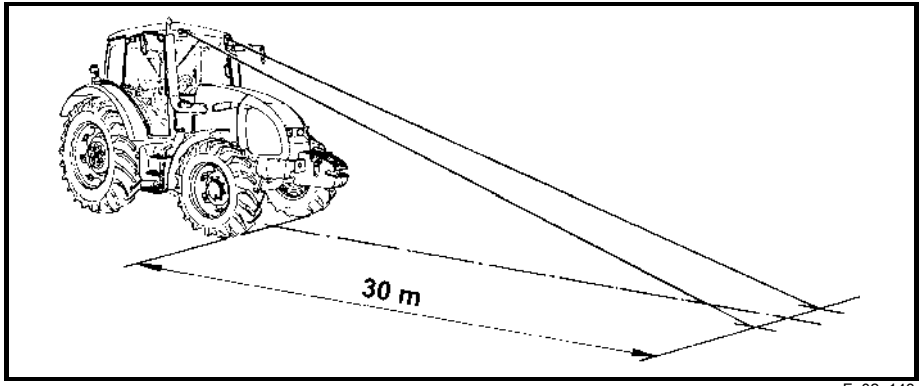

F_02_143

CHECKING THE ADJUSTMENT OF THE CAB ROOF HEADLIGHTS

In the vertical direction there must not be any point of illuminated area lying on the road surface plane to the left from the longitudinal vertical plane passing through the headlight centre further than 30 m from the front outline of the tractor.
In the horizontal direction the light beams must be parallel with the longitudinal axis of symmetry of the tractor.
Check the adjustment of the headlights at the shipping weight of the tractor. The front roof headlights may only be used when driving on public roads when the tractor carries a frontally attached machine or implement covering the main headlights (in the tractor grill).

ELECTRIC INSTALLATION

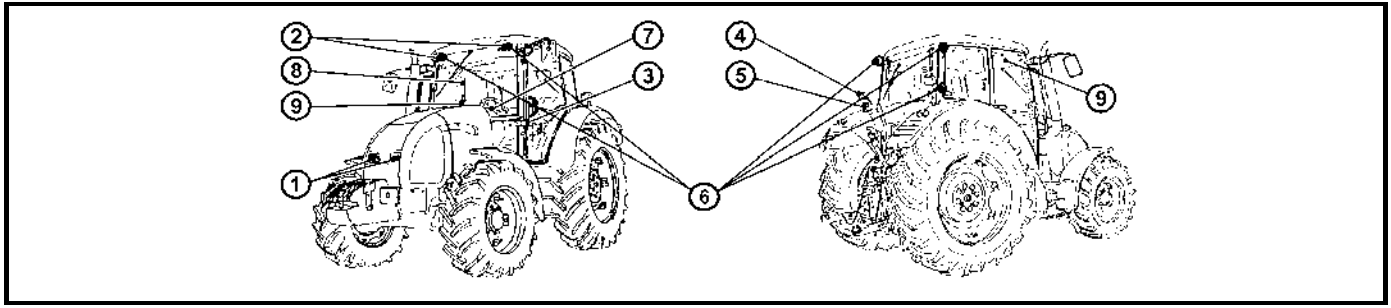

XF_02_144a

LIST OF LAMPS

Pos.	Lamp position	Volt-age	Power	Socket	Note
1	Front headlights H 4	12 V	55/60 W	P 43 t	
2	Cab headlights H 7	12 V	55 W	PX26d	
3	Front combined lights				
	Turn signal lights	12 V	21 W	BA 15 s	
	Position lights	12 V	10 W	BA 15 s	
4	Working light H 3	12 V	55 W	PK 22 s	
5	Rear combined lights				
	Tail lights	12 V	10 W	BA 15 s	
	Brake lights	12 V	21 W	BA 15 s	
	Turn signal lights	12 V	21 W	BA 15 s	
6	Working and ploughing lights H 9	12 V	65 W	PGJ19-5	
7	Dashboard - integrated KMGY device	12 V	2 W	B 8.5 d	lighting, charging indicator
		12 V	1.2 W	B 8.5 d	the other indicators
8	Cab lighting	12 V	5 W	S 8.5	
9	Illumination of EHR-B, PTO switches and heating lighting	12 V	1.2 W	W 2x4.6 d	

NOTES

TRACTOR MAINTENANCE

TRACTOR MAINTENANCE

STEPS PERFORMED DAILY BEFORE THE START OF WORK

Before starting the engine

Check the oil level in the engine
Check the level of cooling liquid and tightness of connections of the cooling system
Check the quantity of oil in the tank of the hydrostatic steering circuit
Check the quantity of the brake liquid and check the liquid brakes for leaks
Check the oil quantity in the gearbox and final drive housing
Check the air pressure in all tyres
Check the tightening of wheels
Check the condition of hitching and attaching equipment

After starting the engine

Check the engine lubrication function (indicator)
Check the charging function (indicator)
Check the steering function (indicator)
Check the function and tightness of the steering circuit
Check the function and efficiency of the tractor brakes
Check the function and efficiency of the brakes of the trailer or semi-trailer

STEPS PERFORMED EVERY 50 HOURS OF WORK

Lubricate the tractor in accordance with the lubrication plan

STEPS PERFORMED EVERY 100 HOURS OF WORK

Clean the cooler blades with pressurized air
Perform maintenance of the dry air cleaner (in accordance with the signal of the clogging indicator)
Check the oil quantity in the gearbox and final drive housing
Check the oil quantity in the gear box of the front PTO
Check the oil quantity in the reducers and in the box of the front driving axle
Drain condensate from the air reservoir

STEPS PERFORMED EVERY 500 HOURS OF WORK

Check the tension of V-belts
Check the whole hydrostatic steering system for play
Check the front axle pin for play
Check the play adjustment of the clutch and brake pedals
Check the function of the parking and foot brake
Check the function of the brakes for the trailer
Clean and lubricate the terminals of the battery with a thin layer of grease
Check the tightness and function of the pressurized air system
Check the function of the driver's seat, lubricate the movable parts with grease

STEPS PERFORMED OUTSIDE THE INTERVAL OF 500 HOURS OF WORK						
	in a new tractor or tractor after a general overhaul					
hour counter reading	500	1000	1500	2 000	2 500	subsequently after every …hours
Check and adjust valve play	o				o	2000
Check the opening pressure of injectors and the function of injection nozzles	o				o	2000
Replace the hydrostatic steering hoses						every 3500 hours or once every 4 years
Check the toe-in of the front wheels				o		2000

TRACTOR MAINTENANCE

FILLING AND FILTER REPLACEMENT						
	in a new tractor or tractor after a general overhaul					
hour counter reading	100	500	1 000	1 500	2 000	subsequently after every …hours
Replace engine oil	o	o	o	o	o	500
Replace the engine oil cleaner element	o	o	o	o	o	500
Replace the fuel cleaner element		o	o	o	o	500
Replace the air cleaner element			o		o	1000
Replace the safety insert of the air cleaner					o	2000
Replace the filtration element of heating						every 1000 hours or once every 2 years
Replace coolant						once every 2 years
Replace brake liquid						once every 2 years
Replace oil in the gearbox and final drive housing				o		1500
Clean the magnet and strainer element of the suction filter of the hydraulic pump		o	o	o	o	500
Replace the oil cleaner element of the gearbox pump	o	o	o	o	o	500
Replace oil in the front driving axle box	o		o		o	1000
Replace oil in the front driving axle reducers	o		o		o	1000
Replace hydrostatic steering oil				o		1500
Replace the filtration element of hydrostatic steering				o		1500
Replace oil in the box of the front PTO and clean the oil strainer		o	o	o	o	500

USED OPERATION LIQUIDS AND FILLING - QUANTITIES	
Designation	Quantity in litres
Brake liquid	0,5
Coolant	20,5
Engine oil	10
Hydrostatic steering oil	2,7
Oil of the front driving axle box	6,5
Oil of the planetary reducers of the front driving axle	2x0.6
Gearbox and final drive housing oil	52
Front PTO gearbox oil	2,7
Fuel	180

• - This is the standard filling of the gearbox and final drive housing. Depending on the type of work and use of the tractor (on a slope, on a level ground, etc.) the gearbox filling should be increased (see chapter Hydraulic system; part Oil quantity drawn from outer hydraulic outlets of this Operator's Manual). The first filling of the gearbox and final drive housing requires an approx. 4l higher quantity of oil.

OIL FOR FOUR-CYLINDER SUPERCHARGED ZETOR ENGINES		
Oil designation	**Viscosity class SAE**	**Performance class API**
Shell Rimula R3 X	15W-40	API CH-4
ARAL Mega Turboral	10W-40	API CH-4
MOL Dynamic Transit	15W-40	API CI-4
MOL Dynamic Turbo Diesel	15W-40	API CF-4
ORLEN OIL Diesel(2)HPDO	15W-40	API CG-4
ÖMV truck LD	15W-40	API CI-4
Fuchs Titan Truck	15W-40	API CG-4

For extremely low ambient temperatures we recommend you to use engine oil with the viscosity class 10W

FRONT PTO OIL	
Manufacturer	**Oil designation**
Shell	Donax TX
BP	Autran DX III
	Fluid 9
Esso	ATF E 25131
Castrol	Transmax S
Elf	Elfmatic G2 Syn
	Elfmatic G3
FINA	Finamatic HP
	Finamatic S6726
Mobil	Mobil ATF
Texaco	Texamatic 7045
Valvoline	ATF Dextron II-E
Beverol	Dextron II-E
	(Fina)matic HP
JD	Hygard JDMJ 20C
Total	Fluide AT42
	Fluidematic Syn

OIL FOR TRANSMISSION SYSTEMS OF THE TRACTORS	
Viscosity class SAE J 306	**Recommended use**
80 W	at ambient temperatures from +40°C to -20□
80 W - 85	at ambient temperatures from +40°C to -20°C
10W - 30	at ambient temperatures from +40°C to -20°C
10W - 40	at ambient temperatures from +40°C to -20°C

OIL FOR TRANSMISSION SYSTEMS OF THE TRACTORS			TAB. 2
Manufacturer	**Oil designation**	**Viscosity class SAE**	**Performance class API**
Shell	Shell Donax TD	80W	GL-4
	Shell spirax GX	80W	GL-4
Aral	EP 80	80W	GL-4
	Fluid HGS	80W	GL-4
	Super Traktoral	10W - 30	GL-4
Esso	Torque Fluid 62	80W	GL-4
Koramo Kolín	Mogul Trans 80	80W	GL-4
	Mogul Traktol UTTO/EKO	80W	GL-4
Paramo Pardubice	Gyrol - UTTO	80W	GL-4
	Gyrol - PP80	80W	GL-4
ÖMV	Austromatic HGN	80W	GL-4
	Gear Oil EC 4	80W - 85	GL-4
	Austrotrac	10W - 40	GL -4
	Austrotrac	10W - 30	GL -4
Fuchs	Titan Hydramot 1030MC	10W - 30	GL-4
	Renolin G 100	80W	GL-4

OIL FOR THE FRONT DRIVING AXLE

Manufacturer	Oil designation	Viscosity class SAE	Performance class API
Shell	Spirax AX	80W - 90	GL-5
Aral	Fluid HGS	80W	GL-4
Agip	Rotra Multi THT	80W	GL-4
Esso	Torque Fluid 62	80W	GL-4
Fuchs	Titan Supergear	80W - 90	GL-4/GL-5
	Titan Hydramot 1030MC	10W - 30	GL-4
	Titan Renep 8090MC	80W - 90	GL-4/GL-5
ÖMV	Gear Oil LS	85W - 90	GL-5

OIL FOR THE HYDROSTATIC STEERING OF THE TRACTORS

Manufacturer	Oil designation	Classification
Shell	TELLUS DO 32	HLP DIN 51524
Aral	Vitam DE 32	HLP DIN 51524
Fuchs	RENOLIND10VG32	HLP DIN 51524-2
ÖMV	Hyd HLP 32	HLP DIN 51524

PLASTIC LUBRICANT FOR THE TRACTOR

Type	Classification
Shell retinax HD2	DIN 51825 KP 2 K-20
LA 2	ISO 6743/9 CCEB 2/3, ISO - L - XBCEA 2
LV 2M	ISO 6743/9 CCEB 2/3
ÖMV signum	DIN 51825-K 2 C-30

HYDRAULIC BRAKE LIQUID FOR THE TRACTORS	
Type	**Classification**
Shell Donax YB	SAE J 1703, ISO 4925
Synthol 205	PND 31-656-80, ISO 4925, SAE - J 1703
Fuchs Stopred	SAE - J 1703
Brake Fluid DOT 4	ISO 4925, SAE - J 1703
	CAUTION! 1. *The liquid is not designed for arctic conditions!* 2. *Replace the brake liquid once every two years regardless of the number of hours of work!* 3. *Liquids of the same classification can be mixed together.*

LIQUID FOR THE COOLING SYSTEM OF THE TRACTORS
FRIDEX - STABIL, FRIDIOL 91 or FRICOFIN S and demineralised water in the proportion of 1:1.5 (replenish the mixture in this proportion). Antifreeze liquids for replacement abroad must contain anti-corrosion additives protecting all materials (incl. rubber and head gaskets) of the cooling system of the engine. ***CAUTION!*** 1. *Water without an antifreeze mixture must not be used in the tractors!* 2. *Replace the cooling liquid after two years of operation. The FRIDEX - STABIL and FRIDIOL 91 liquids can be mixed together.* 3. *Miscibility with liquids of other manufacturers has not been verified!*

FUEL
Summer diesel fuel for the period from April 1 to October 31 Winter diesel fuel for the period from November 1 to March 31 ***Note:*** Suitable fuel types abroad should be used in a similar way.
Natural Diesel mixed fuel (bio-diesel) ***Note:*** Using bio-fuel in the tractor requires installation of REP hoses in the fuel system. Using bio-fuel increases consumption, reduces the output by approx. 5% and requires replacement of the engine oil after 200 hours of work. It also has an aggressive influence on varnished parts.

LUBRICATION PLAN OF THE TRACTOR

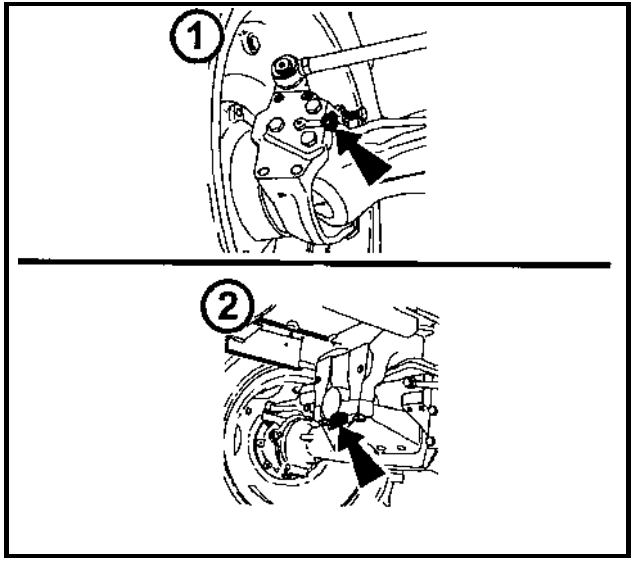

FRONT DRIVEN AXLE		
Pos. no.	Identification	No. of lubrication points
1	Turning radius pins	4
2	Central pin	2

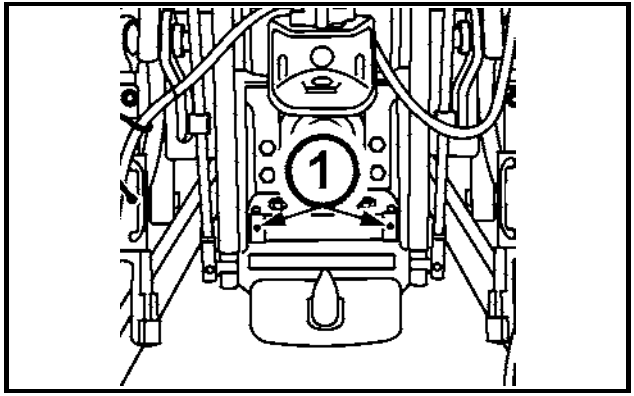

HITCH FOR A SINGLE-AXLE SEMI-TRAILER		
Pos. no.	Identification	No. of lubrication points
1	Hook pin bearings	0 to 4 (by version)

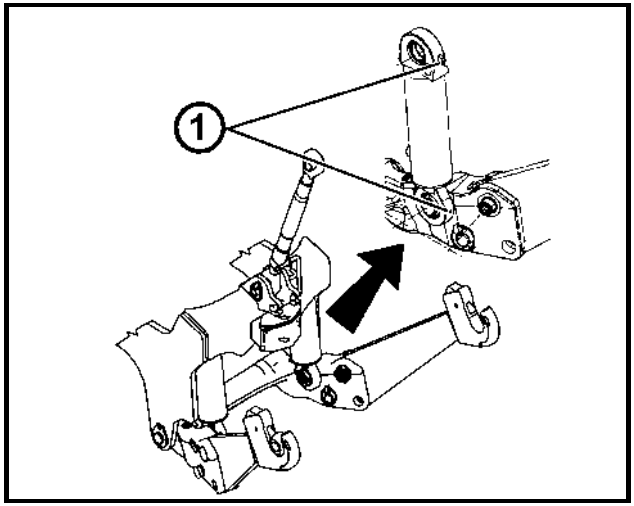

FRONT THREE-POINT HITCH		
Pos. no.	Identification	No. of lubrication points
1	Pins of cylinders of the front three-point hitch	4

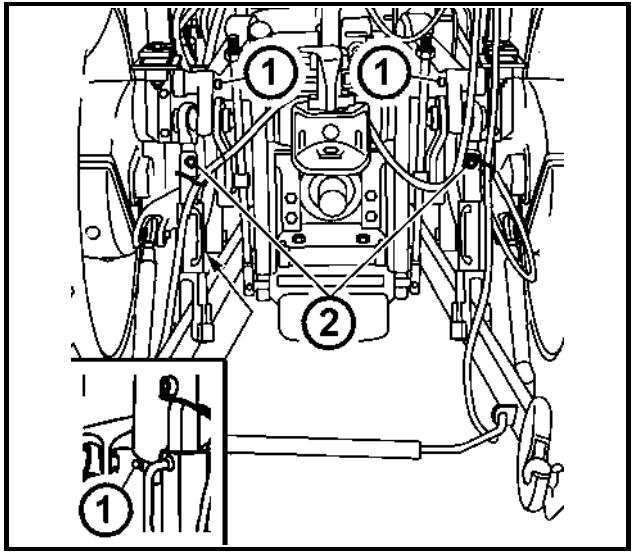

THREE-POINT HITCH		
Pos. no.	Identification	No. of lubrication points
1	Pins of auxiliary hydraulic cylinders	2
2	Lifting draw-bars	2

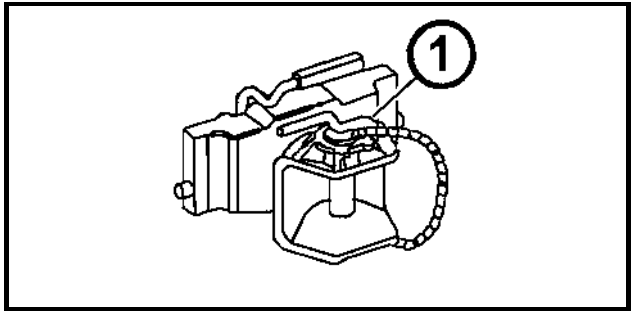

HITCH MOUTH FOR A TRAILER		
Pos. no.	Identification	No. of lubrication points
1	Hitch mouth for a trailer	1

TRACTOR MAINTENANCE

GENERAL OVERHAUL OF THE TRACTORS

A general overhaul of the tractor should be carried out if its further use is uneconomical, if most of its parts require a repair and its overall technical condition endangers traffic safety.

If all the maintenance instructions specified in the technical documentation of the manufacturer are observed and if work is carried out in a moderate climate and plain terrain, the mean service life of the engine and transmission system is 8000 hours of work.

This number of hours is valid on condition of the following distribution of tractor work:

Ploughing and pre-sowing soil treatment	**15 - 25 %**
Sowing and planting	**10 - 15 %**
Harvest work	**10 - 20 %**
Farming transport	**40 - 65 %**

If the tractor works in mountainous and sub-mountainous regions, the service life of the engine and transmission system is reduced by 15-20%.

If the tractor works under worsened climatic conditions, the service life of the engine and transmission system is reduced by 15-20%.

Note: The transmission system includes the front driving axle.

TECHNICAL MAINTENANCE OF THE TRACTORS AFTER A GENERAL OVERHAUL OF THE MAIN GROUPS

Run in the tractor after a general overhaul in accordance with the instructions for running in a new tractor. Perform the maintenance in the same way as with a new tractor.

MAINTENANCE INSTRUCTIONS

The driver of the tractor can do most of the planned maintenance work by himself. However, if you do not have sufficient technical equipment, entrust the execution of more complicated tasks to a specialized workshop.

⚠ *All the work related to the cleaning, lubrication and adjustment of the tractor or attached implements may only be performed after stopping of the engine and other movable parts except the brake control and charging.*

Page

MAINTENANCE INSTRUCTIONS

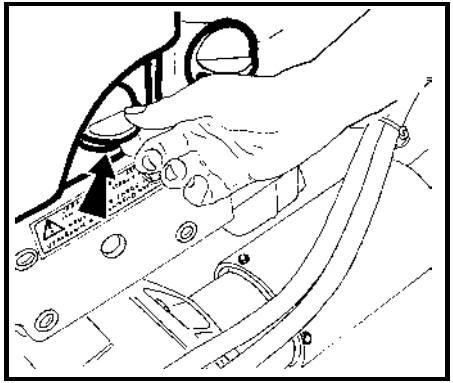

F_02_27

DISMANTLING THE FRONT SIDE PLATE OF THE HOOD

The right as well as the left side plate of the hood can be removed from the tractor after unlocking of the safety peg.

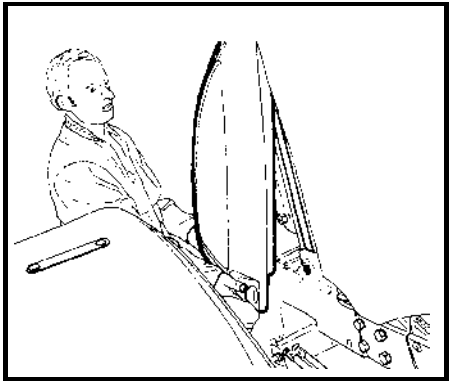

F_02_84

Note: Perform the assembly and disassembly from the operator's position in front of the front axle.

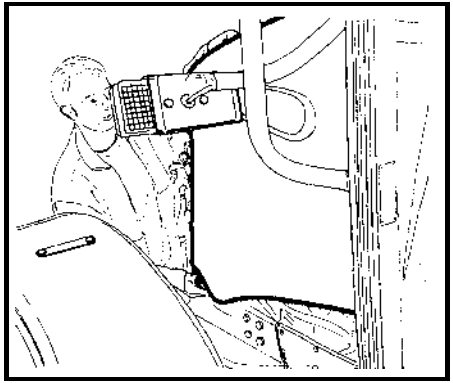

F_02_85

DISMANTLING THE REAR SIDE PLATE OF THE HOOD

After unlocking the safety peg lift the right and left side plate in its front part and slide it toward the front to make the fixing pins located in the rear part of the side plate leave the rubber bushings. Then, lift the whole side plate and remove it.

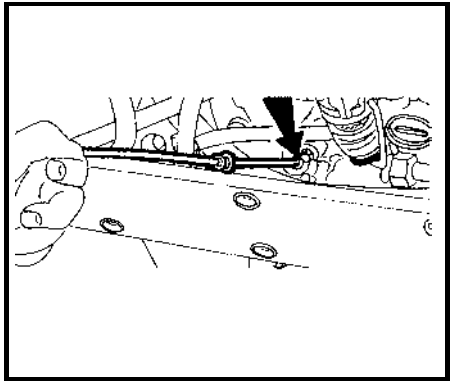

H193

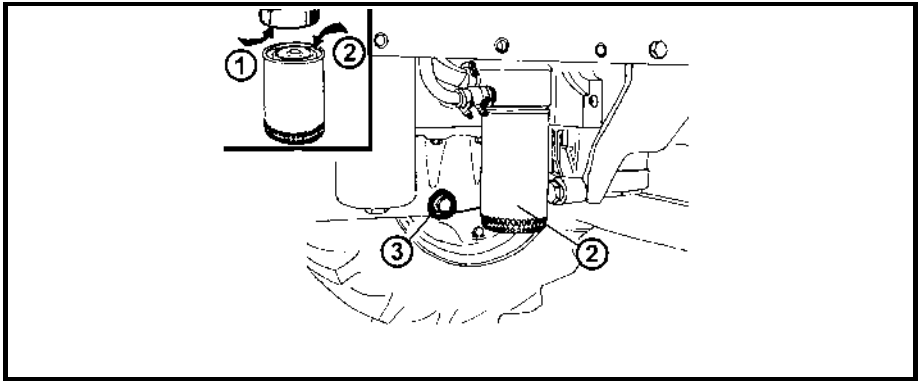

H195

CHECKING THE OIL LEVEL IN THE ENGINE

Check the oil level daily before starting work with the tractor in the horizontal position. Unscrew the dipstick, wipe it with a piece of cloth and screw it back in. After repeated removal of the dipstick the oil level must not drop below the lower mark. Replenish oil as necessary through the filling opening.

DRAINING OIL FROM THE ENGINE

Drain oil by unscrewing the drain plug (3), best immediately after a drive or after heating the engine to the working temperature. Clean the drain plug before returning it to its place. Check the sealing ring for integrity.

REPLACING THE FULL-FLOW ENGINE OIL CLEANER

The cleaner is replaced at every engine oil replacement. Before installing the new cleaner clean the sealing surface of the housing (1) and the cleaner (2). Coat the rubber sealing with oil that you will fill the engine with and tighten the cleaner by hand. When the sealing gets in contact with the block sealing, tighten the cleaner again by 3/4 to 1 1/4 turns. Check the cleaner for possible leaks after starting the engine.

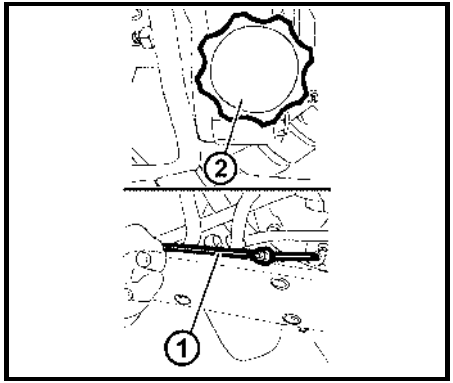

H196

FILLING THE ENGINE WITH OIL

Pour the prescribed quantity of engine oil into the filling opening (2), start the engine and let it run for 2 - 3 minutes at 750 - 800 rpm.

After stopping of the engine and level stabilization use the dipstick (1) to check the oil level and check the cleaner, drain plug (3) and other joints for leaks.

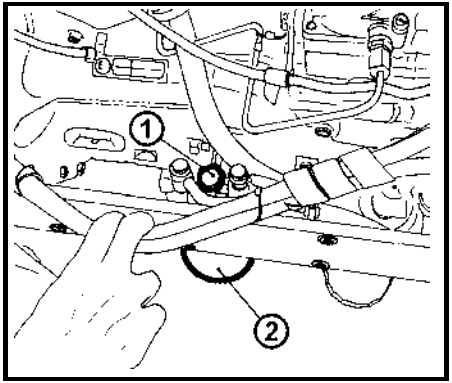

F238

REPLACING THE FUEL FILTER ELEMENT

Replace the filter element after releasing the nut (1) and unscrewing the bowl (2). During the re-assembly of the cleaned bowl with the new filter element check proper seating of the bowl gasket. Bleed the fuel system.

During the cleaning and replacement of the filter elements place a suitable vessel under the engine to catch dripping fuel.

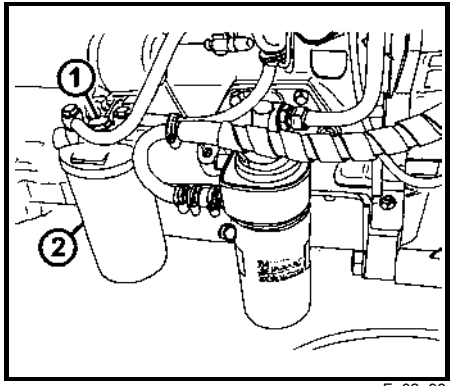

F_02_93

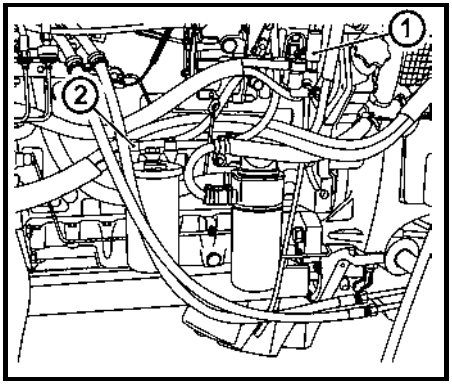

E706

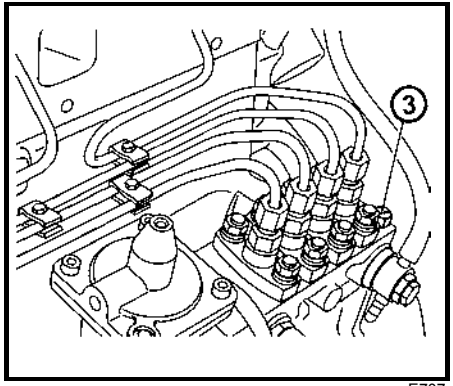

E707

BLEEDING THE FUEL SYSTEM

Before bleeding place a suitable container under the engine to collect dripping fuel from the filter and injection pump.

1. Prime the fuel system with several strokes of the manual control of the priming pump (1).
2. Release the screw (2) of the fitting of the fuel inlet to the filter and let the foam escape.
3. Retighten the screw and repeat the procedure until after releasing of the screw clear fuel starts to continuously flow from the filter.
4. Bleed the injection pump in the same way.
5. Do the bleeding with the screw (3) positioned on the pump body.

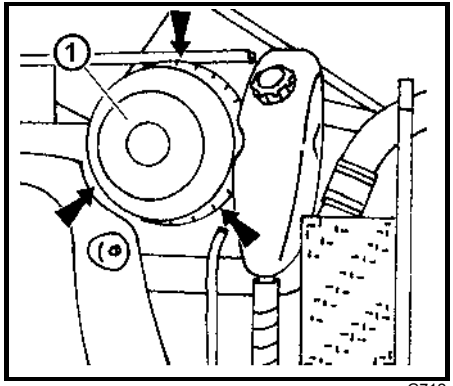

G712

DRY AIR CLEANER MAINTENANCE INSTRUCTIONS

Perform maintenance of the air cleaner in the following way:

1. Remove the right side plate of the hood
2. Release the clamps of the air cleaner lid (marked with arrows)
3. Remove the air cleaner lid (1)

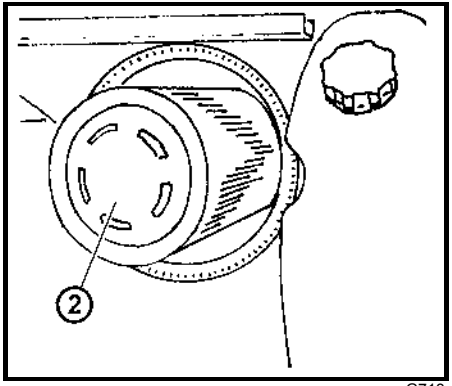

G713

RECOVERY OF THE MAIN AIR CLEANER ELEMENT

–Remove the main element of the dry cleaner (2) by pulling

If the main element is not damaged (there must not be any dust on the inner side of the element), recover it by blowing pressurized air from the inner side of the element.

This way you can recover the main element 3 times at the most. The element must be replaced once a year.

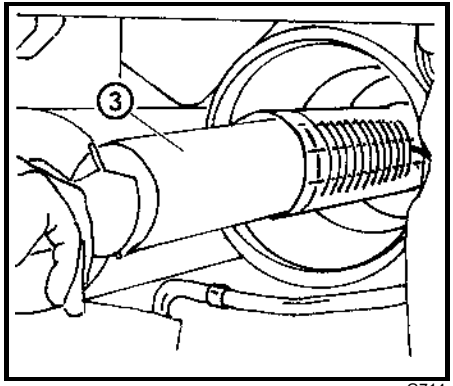

G714

REPLACING THE SAFETY ELEMENT OF THE AIR CLEANER

–Remove the safety element of the dry cleaner (3) by pulling.

⚠ *The safety element cannot be recovered. It must always be replaced in these cases.*

-If the main element is damaged.

-After covering 2000 hours of work

-At least once every two years.

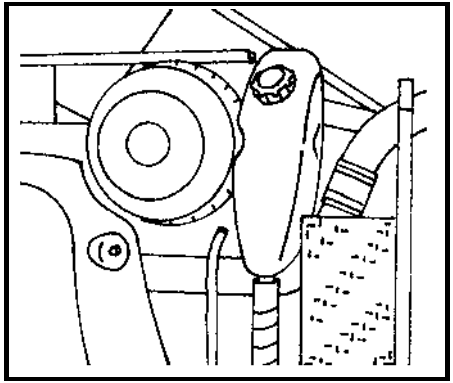

G715

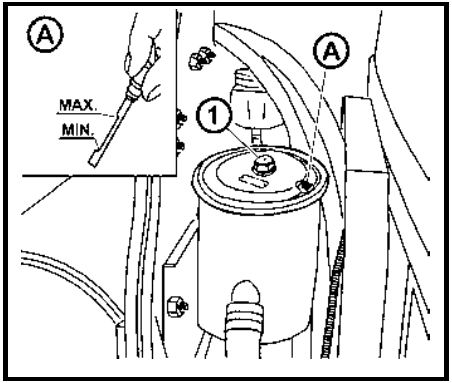

D402

REASSEMBLY OF THE AIR CLEANER ELEMENTS

When reassembling the air cleaner elements proceed in the reverse order.

Observe the following points during the element reassembly:

- Make sure the contact surfaces are clean.
- During the assembly the elements must not get deformed and after installation they must not vibrate.
- After closing of the cleaner with the lid the whole cleaner must be perfectly leak-proof.
- After the maintenance of the dry air cleaner ensure proper functioning of the clogging indicator again.

HYDROSTATIC STEERING OIL TANK

The tank is accessible after the removal of the left rear side plate of the hood.
Use the dipstick (A) to check the oil level in the hydrostatic steering tank; maintain the oil level between the MIN and MAX marks, see fig. (A).
If necessary, replenish oil after unscrewing the nut (1) and removing the tank lid.

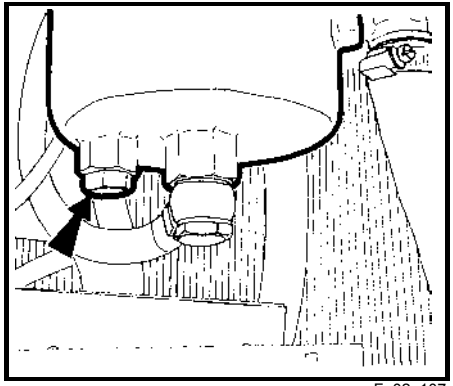

F_02_107

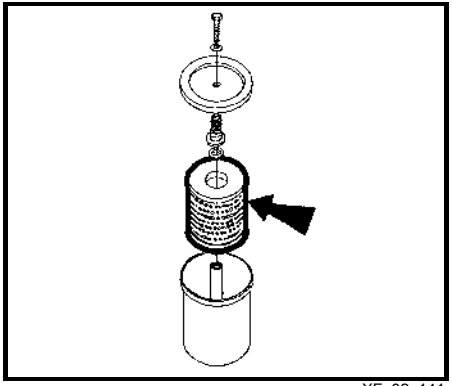

XF_02_141

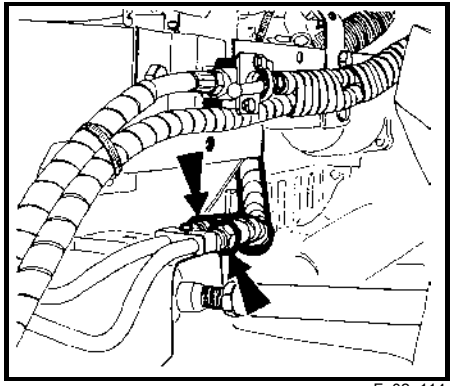

F_02_114

REPLACING THE FILTRATION ELEMENT OF THE HYDROSTATIC STEERING

1 - Dismantle the left rear side plate of the hood
2 - Place a suitable container under the hydrostatic steering tank
3 - Release the drain screw
4 - Drain oil from the tank
5 - Unscrew the tank lid
6 - Replace the filtration element
7 - Install the new element
8 - Disconnect both the hoses from the working cylinder and together with the return hose insert their ends to a waste oil container.
9 - Start the engine and at the idle speed (max. 10 s) turn the steering wheel 2-3 times to both sides to push oil out of the steering unit and the pipes.

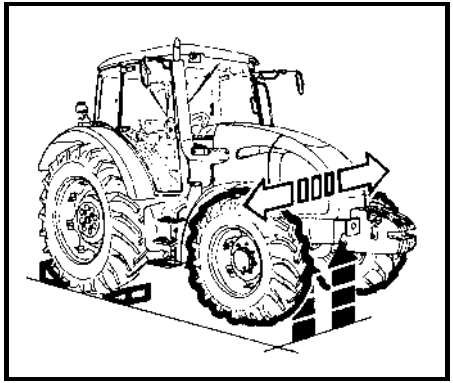

F_02_123

10 - Secure the tractor against movement and lift the front axle.
11 - Place an oil collection container under the working cylinder and by turning the wheels (by hand) push oil out of the working cylinder.
12 - Reassemble all the disconnected joints.
13 - Fill the tank with oil and bleed the hydrostatic steering circuit.

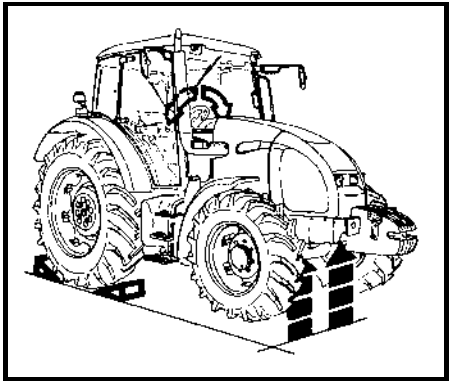

F_02_115

BLEEDING THE HYDRAULIC CIRCUIT OF THE HYDROSTATIC STEERING

1 - Start the engine and let it run at the idle speed for approx. 1 minute.
2 - Turn the steering wheel several times to both the sides at the idle speed of the engine.
3 - At the maximum engine speed turn the wheels with the steering wheel 3 times alternately slowly and quickly to both the sides up to the limiting stops of the wheels.
4 - Stop the engine and lower the tractor onto the front wheels.

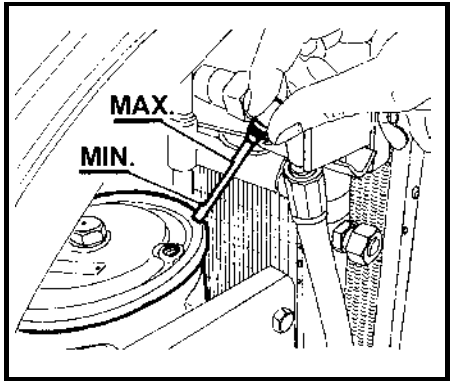

F_02_5

During all the steps of bleeding of the hydrostatic steering observe the oil level in the tank to avoid aspiration of air to the steering system.

After the end of bleeding check or replenish the oil level to the dipstick mark. Check all the connections and lines for leaks.

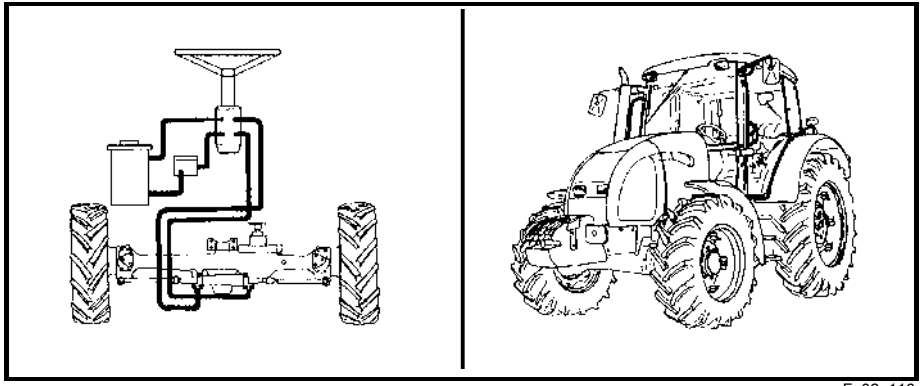

F_02_116

REPLACING THE HYDROSTATIC STEERING HOSES

The hoses must be replaced after four years from the production date (the date is indicated on their surface) or after 3500 hours of work of the tractor or immediately after discovering signs of their damage (hose sweating, local buckling, leaks of the working media around the end pieces and on the hose surface, abrasion of the hose surface to the metallic reinforcement, damage of the outer yarn braiding in the case of low-pressure hoses).

⚠ *In case of a pump failure or after stopping of the engine the steering capability is maintained, but the required steering force gets higher. You can drive the tractor at a reduced speed to the nearest workshop.*

The steering wheel must not be held in the limit turning angle positions for a long time (the maximum time is 20 s); otherwise the oil in the hydrostatic steering circuit is heated up excessively.

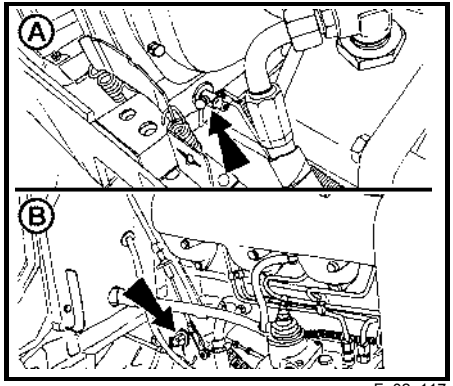

F_02_117

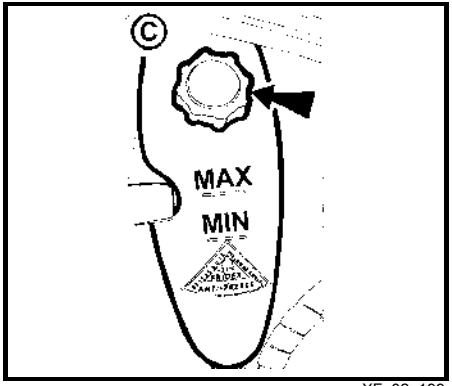

XF_02_199

COOLANT REPLACEMENT

Proceed as follows:

1. Open the heating valve and release the overpressure plug (C) on the compensation tank.
2. Drain coolant from the cooler. The drain plug (A) is accessible after lifting off the left side plate.
3. Drain coolant from the engine block. The drain valve (B) is accessible after disassembly of the right side plate.
4. After draining the coolant close both the drain valves (leave the heating valve open).
5. Fill the cooling system with coolant up to the neck of the compensation tank and close it with the overpressure plug.
6. Start the engine and let it run for approx. 1 min.
7. Fill up the level of the coolant in the compensation tank to the MAX mark.
8. Close the tank with the overpressure plug (C).

After loosening of the screws on the upper chamber of the auxiliary cooler clear liquid must run out.

Always use the prescribed coolant to fill the cooling system of the engine.
Never fill the cooling system with water.
Using other than the prescribed coolant may damage the engine.

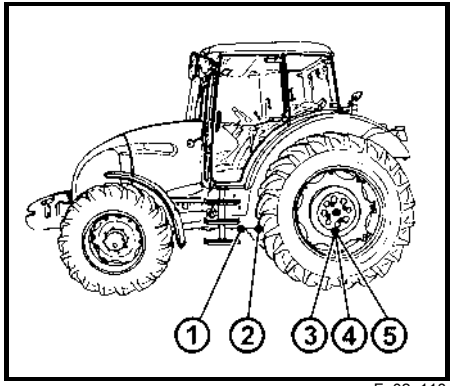

F_02_118

DRAIN OPENINGS AND PLUGS

Pos.	Opening, plug
(1) -	Oil from the clutch box
(2) -	Gearbox oil
(3)(4)(5) -	Oil from the final drive housing

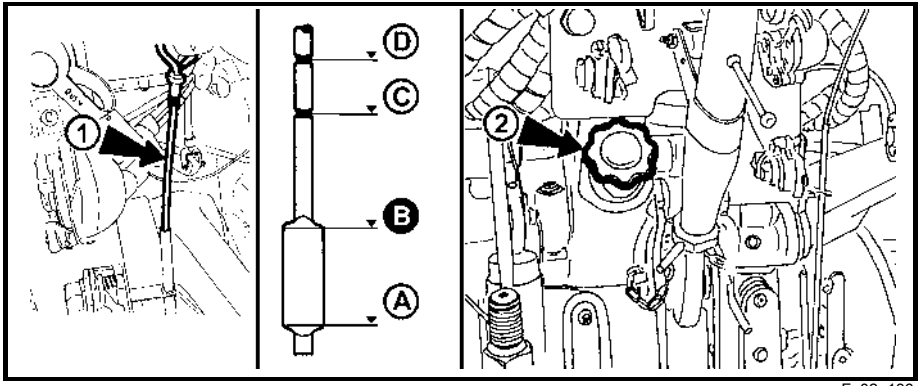

F_02_136

CHECKING AND REPLACING GEARBOX OIL

Fill oil up to the upper edge of the dipstick tab (1) or up to one of the marks as necessary depending on the way the tractor is used. Measure the oil level in the gearbox with the engine stopped by completely inserting the plug with the dipstick to the pipe mouth.

	Gearbox oil level	Tractor use
A	minimum	standard operation
B	**normal**	standard operation
C	+7 l (increased)	working on a slope
D	+15 l (maximum)	aggregation with machines with higher external oil consumption

The filling opening of gearbox oil (2) is located in the hydraulic system lid. It is accessible from the rear side of the tractor.

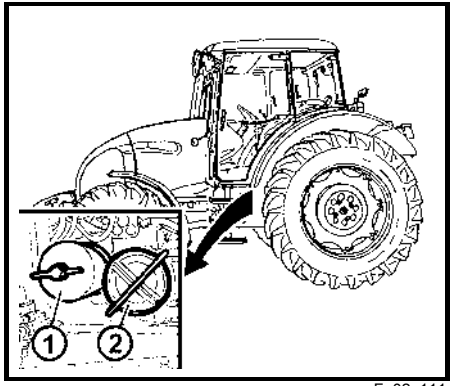

F_02_111

AFTER DRAINING OIL

1. Clean the magnet (it is part of the lid) and the strainer element of the suctioning filter (2)
2. Replace the filter element (1) Tighten the cleaner bowl screw by hand, do not use any tools
3. After cleaning screw all the drain screws back on.
4. Fill oil (approx. 40 litres), start the engine and let it run for approx. 2 minutes
5. After stopping of the engine and stabilization of the oil level in the gearbox check its quantity and fill up oil to the upper edge of the dipstick tab or if increased filling is necessary, to the lower or upper mark of the dipstick.

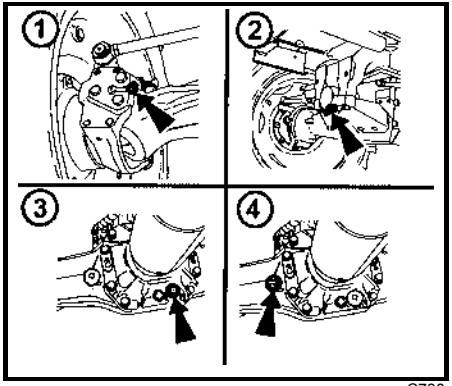

C730

LUBRICATION AND FILLING POINTS OF THE FRONT DRIVING AXLE

1. Lubricating nipple of the kingpin
2. Sliding bearings (2 pieces) of the front driving axle
3. Drain opening of the final drive housing oil
4. Filling and inspection opening of final drive housing oil (after removing of the inspection screw the oil level must reach the bottom edge of the inspection opening)

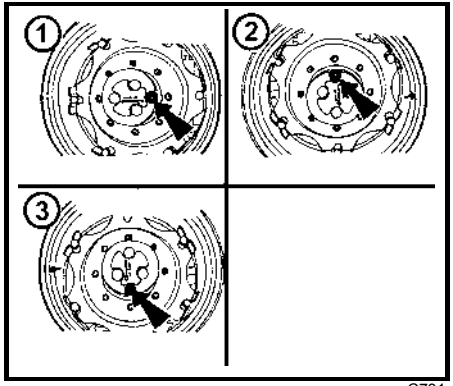

C731

FILLING, INSPECTION AND DRAIN OPENING OF OIL OF THE FRONT WHEEL REDUCERS

Oil is checked, filled and drained through one opening after turning of the reducer in accordance with the figure.

1. Checking the oil level - opening on the horizontal axis of the reducer (after removing of the inspection screw the oil level must reach the bottom edge of the inspection opening)
2. Oil filling - opening at the top
3. Oil draining - opening at the bottom

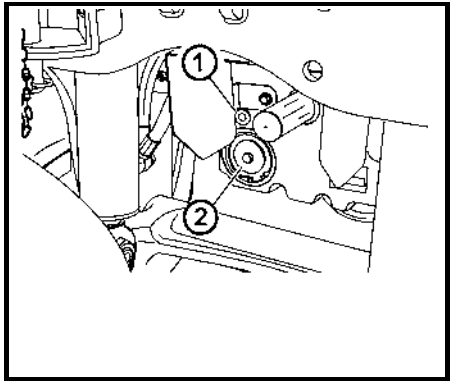

F206

FRONT PTO

The inspection and filling plug of oil (1) is situated on the front side of the front PTO case.

The front PTO with the standard turning direction is equipped with a hollow bolt of the oil cooler hose instead of the inspection and filling plug. Perform the check after removing the hollow bolt.

After unscrewing of the inspection plug the oil level must reach the bottom edge of the inspection opening.

During the oil replacement the oil cleaning strainer (2) must be cleaned. The cleaning strainer is accessible after the disassembly of the locking ring and removal of the cap.

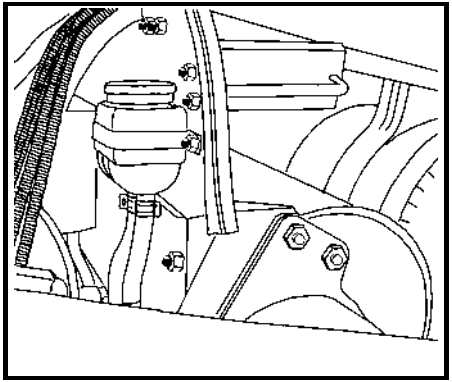

D401

BRAKE LIQUID REPLENISHMENT

The tank is accessible after the removal of the right rear side plate of the hood.

Maintain the brake liquid level in the range of 3/4 of the tank content (max. level) and 1/2 of the tank content (minimum level).

When handling brake liquid, keep absolute cleanness. Check the brake liquid level daily before starting your work.

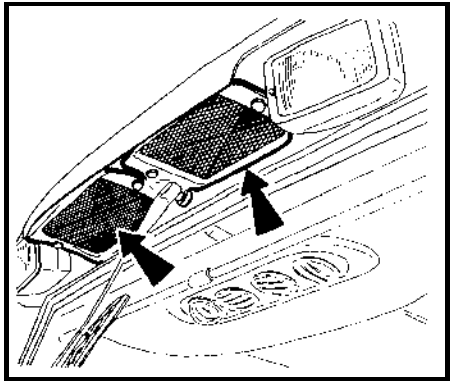

E13

CARBON FILTER INSTALLATION INSTRUCTIONS

1. Remove the old filter from the air duct orifice in the place of its mounting.
2. Remove the protective package from the new filter.
3. Insert the filter into the air duct orifice in such a way to make the air flow direction correspond to the flow direction through the filter in accordance with the arrow on the filter. The entering air must first pass through the white dust filtration layer.
4. Check proper sealing of the filter.
5. Secure the filter.

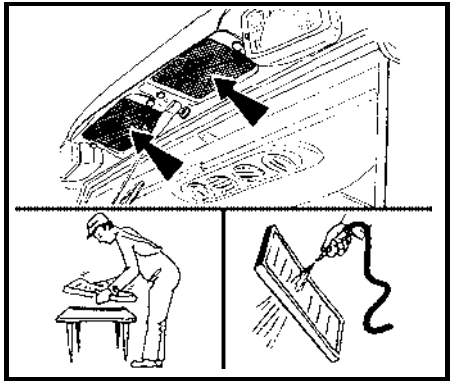

E730

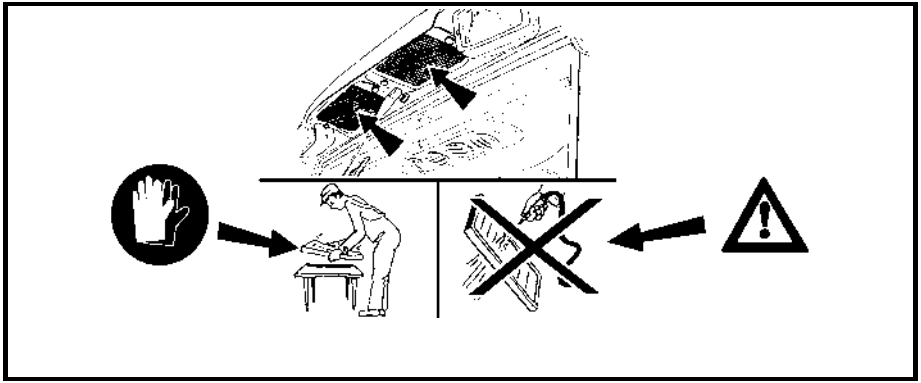

E730a

CLEANING THE HEATING FILTERS

Recover the filters positioned under the covering grills over the windshield outside the cabin with regard to the degree of clogging:

–by shaking

–by blowing with compressed air

Check the filters for clogging daily. Replace heavily clogged filters.

The safety cab of the tractor is not equipped with special filters of air aspirated to the cab.
It does not protect the operator from the effect of aerosols and other harmful substances!
Use a filter with active carbon when working with harmful substances.

*AIR FILTER WITH ACTIVE CARBON

Filters with active carbon are installed instead of the standard dust filter and they are replaced in the same way as the normal filters. The filter must be inserted with the white side towards the grill. The installation instructions are found on the next page.
The filter is only used during spraying of pesticides; then it must be replaced with a paper filter again as flying dust would clog the carbon filter in a very short time.
During its use the recirculation control must be in the position of “air suctioned from the outside”
The fan control must be in the “maximum” position.

- *WARNING: The filter does not provide complete protection from toxic substances*
- *When handling the filter wear protective gloves*
- *Do not clean or blow the filter with compressed air.*

DANGER: Replace the active carbon filter every 200 hours or 36 months (the production date is printed on the filter). If you feel the smell of pesticides in the cab, replace the filter immediately and have the cab sealing checked. Used filters must be disposed of in specialized collection centres.

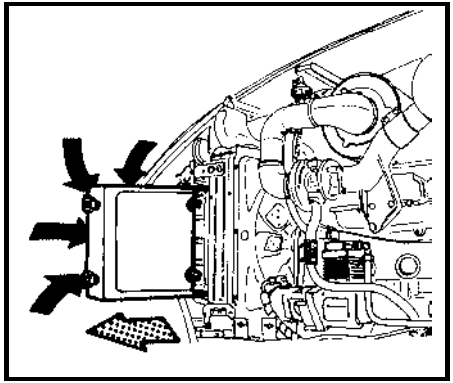

F_02_120

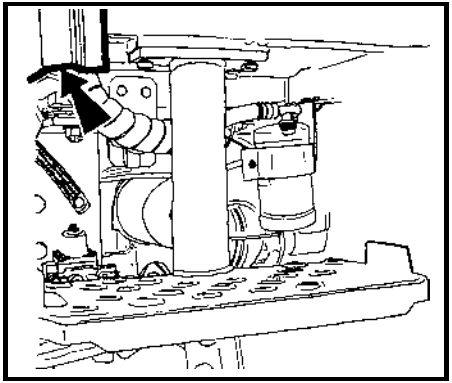

F267

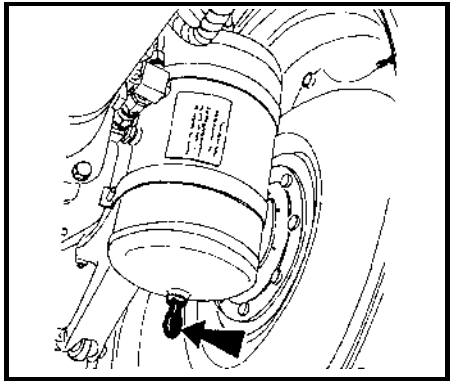

F268

AIR-CONDITIONING MAINTENANCE

The most important element of maintenance of the air-conditioning system is cleaning the AC condenser (it is installed in front of the engine cooler).

If the AC condenser is clogged, it does not only reduce the cooling efficiency of the AC system but also the efficiency of the engine cooling.

Remove the front side plate of the hood, release and slide the cooler towards the side and clean the condenser with pressurized air or pressurized water (against the driving direction of the tractor). Then, slide the cooler back and fix it properly. Be careful about the proper routing of hoses to the oil cooler.

When the air-conditioning functions properly, water condenses in the roof space of the cab and the condensate is drained through hoses in the cab pillars and runs out at the bottom side of the pillar. This is why you must make sure that the condensate drain hoses will not be blocked.

DRAINING CONDENSATE FROM THE AIR RESERVOIR

Draining is performed by deflecting or compressing the protruding part of the valve.

The air reservoirs are located in front of the rear axle.

Th tractors are equipped with one air reservoir installed on the left side of the tractor as standard or * two air reservoirs positioned on the right and left side of the tractor (if air-pressure brakes are installed).

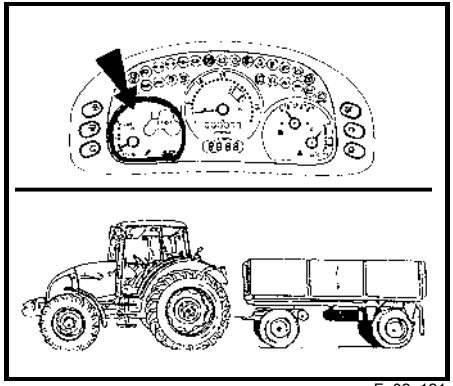

F_02_121

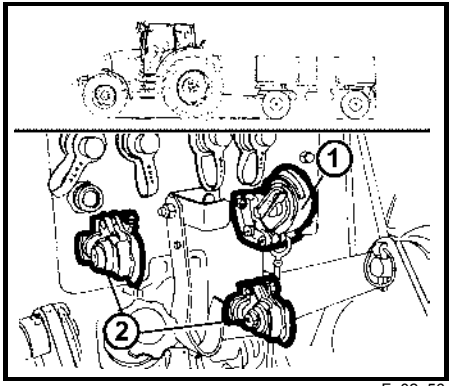

F_02_56

CHECKING THE AIR SYSTEMS FOR LEAKS

–Fill the air reservoir to the maximum pressure

–With the engine stopped the air pressure must not drop by more than 10 kPa in 10 minutes.

⚠ *Perform the leak check daily before driving with a trailer or semi-trailer. In case of a brake system failure or if the pressure drops below 450 kPa, the warning indicator on the dashboard will light up.*

WORKING PRESSURE OF AIR BRAKES

In the single- and double-hose version the air pressure at the double-hose coupling (2) (red cap) is 740 ± 20 kPa and at the single-hose coupling (1) max. 600 ± 20 kPa (at the moment the pressure controller relieves the compressor - blows out the air).

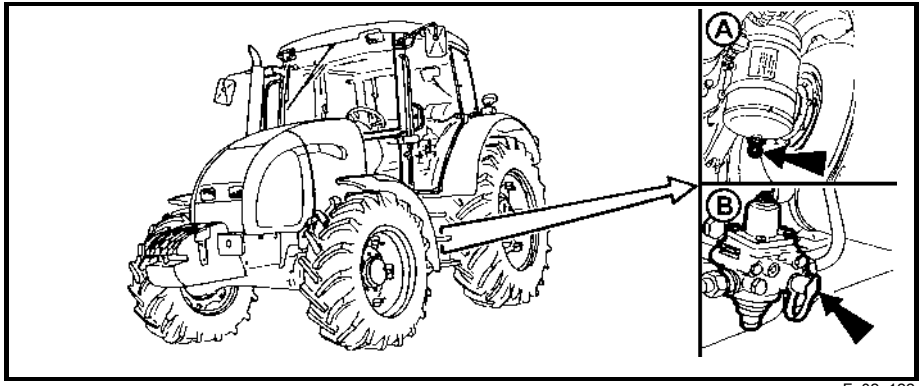

F_02_122

MAINTENANCE AND TREATMENT OF TYRES

Regularly check the outer surface of tyres and verify whether they are free of defects at the sides and over the bead and whether the reinforcement is not damaged.

⚠ *Do not use tyres that show a defect any longer.*

TYRE INFLATION

The basic recommended inflation values are specified in the table. Regularly check the tyre pressure before driving, when the tyres are cold. To inflate the tyres use the pressure controller (B), which acts as a pressure equalizer, tyre filling device and safety valve. Remove the rubber cap of the pressure controller and screw a tyre inflation hose instead. Screw the hose up to the end of the thread to compress the non-return valve. If there is the maximum pressure in the air reservoir (A), the tyres cannot be inflated. In this case you must first reduce the pressure with the condensate drain valve located in the bottom part of the air reservoir (A). After inflating the tyres you must put the rubber cap back on the pressure controller.

RECOMMENDED INFLATION VALUES OF THE FRONT WHEEL TYRES

The value of the permitted load-bearing capacity of the front axle must not exceed the sum of the load-bearing capacity values of both the tyres that are installed on the axle. The values of the permitted load-bearing capacity of the axles are specified in the "Main technical parameters" of the corresponding tractor type. On the same axle of the tractor there must not be tyres of different dimensions and designs (in this case tyre design means the diagonal or radial tyre version).

		Tyre dimensions and design		
Principal working activity		**12.4-248 PR**	**12.4R24**	**13.6R24**
For field work	Inflation (kPa)	100-170	130-160	130-160
	Load-bearing capacity (kg)	895-1200	1190-1360	1270-1450
For road transport	Inflation (kPa)	200-250	130-160	130-160
	Load-bearing capacity (kg)	1330-1415	1190-1360	1270-1450
For work with a front loader at the maximum permitted speed of 8 km/h.	Inflation (kPa)	290	max. 200	max.200
	Load-bearing capacity (kg)	max. 2830	max. 2040	max.1910

		Tyre dimensions and design			
Principal working activity		**14.9R24**	**380/70R24**	**420/70R24**	**12.4-28 10PR**
For field work	Inflation (kPa)	130-160	130-160	130-160	130-170
	Load-bearing capacity (kg)	1490-1700	1445-1650	1665-1900	1085-1275
For road transport	Inflation (kPa)	130-160	190	190	170-280
	Load-bearing capacity (kg)	1490-1700	(1445)-1650	(1665)-1900	1275-1790
For work with a front loader at the maximum permitted speed of 8 km/h.	Inflation (kPa)	max. 200	max. 200	max. 200	max. 280
	Load-bearing capacity (kg)	max. 2550	max. 2300	max. 2300	max. 2500

Note: The 380/70R24 tyre is a dimensional equivalent of the 13.6R24 tyre.
The 420/70R24 tyre is a dimensional equivalent of the 14.9R24 tyre.
The specified load-bearing capacities of tyres for field work and road transport correspond to the maximum travelling speed of the tractor, i.e. in the case of radial tyres 40 km/h and in the case of diagonal tyres 30 km/h. The specified values refer to one tyre. For a tractor the max. load per axle must not exceed the max. load-bearing capacity values of the tyres.

RECOMMENDED INFLATION VALUES OF THE REAR WHEEL TYRES

The value of the permitted load-bearing capacity of the rear axle must not exceed the sum of the load-bearing capacity values of both the tyres that are installed on the axle. The values of the permitted load-bearing capacity of the axles are specified in the "Main technical parameters" of the corresponding tractor type. On the same axle of the tractor there must not be tyres of different dimensions and designs (in this case tyre design means the diagonal or radial tyre version).

		Tyre dimensions and design			
Principal working activity		**16.9-34 8 PR**	**16.9R34**	**18.4-34 8 PR**	**18.4R34**
For field work	Inflation (kPa)	110-150	140-160	110-140	130-160
	Load-bearing capacity (kg)	1830-2200	2130-2430	2250-2565	2450-2800
For road transport	Inflation (kPa)	170-200	130-160	170-200	130-160
	Load-bearing capacity (kg)	max. 2380	2130-2430	max. 2565	2450-2800

		Tyre dimensions and design					
Principal working activity		**16.9-38 8 PR**	**16.9R38**	**480/70R38**	**18.4R38**	**520/70R38**	**18.4-38**
For field work	Inflation (kPa)	110-140	130-160	120-160	130-160	110-160	130-140
	Load-bearing capacity (kg)	1940-2230	2255-2575	2500-2900	2625-3000	2635-3350	2595-2715
For road transport	Inflation (kPa)	170-200	130-160	140-160	130-160	110-160	130-140
	Load-bearing capacity (kg)	max. 2520	2255-2575	2700-2900	2625-3000	2635-3350	2595-2715

Note: The 480/70R38 tyre is a dimensional equivalent of the 16.9R38 tyre.
The 570/70R38 tyre is a dimensional equivalent of the 18.4R38 tyre.
Inflate the front as well as the rear tyres to the lower of the above mentioned values for field work on light soil (dry, sandy). The higher of the above mentioned pressure values is designed for work on heavy and compact soil. During ploughing work at the minimum inflation value there must not be any folding of the side parts of the tyres. The load-bearing capacities specified in the tables correspond to the maximum travelling speed of the tractor, i.e. in the case of radial tyres 40 km/h and in the case of diagonal tyres 30 km/h. The specified values refer to one tyre. For a tractor the max. load per axle must not exceed the max. load-bearing capacity values of the tyres.

MAINTENANCE INSTRUCTIONS

During loading of the tractor the maximum values of the permitted load-bearing capacity of the axles mentioned in the “Technical parameters of the tractor” table must not be exceeded. Changes of the load-bearing capacity of the tyres from the basic values are specified in the tables below.

Note: The 100% inflation values of tyres are specified in the tables of recommended tyre inflation in the part "Principal working activity - for field work”.

TYRES FOR DRIVING WHEELS

Driving wheels - diagonal tyres

Speed km/h	Load-bearing capacity %	Inflation pressure %
10	140**	125
20	120	100
25	107	100
30	100	100
35	90	100
40	80	100

** minimum value for 6 PR

It is not allowed to increase the load-bearing capacity of the tyres except the above mentioned cases by further increasing the inflation pressure above the values mentioned in the table while simultaneous decreasing the speed.

TYRES FOR DRIVING WHEELS

Driving wheels - radial tyres

Speed km/h	Load-bearing capacity %	Inflation pressure %
10	150	125
20	123	100
25	111	100
30	107	100
35	103	100
40	100	100

STORING THE TRACTOR

If the tractor is to be put out of operation for a shorter period, inflate the tyres to the value required for road transport. In case of a longer period of inactivity of the tractor (storage), support the tractor and reduce the pressure in the tyres to the minimum (the wheels must not touch the ground).

ADJUSTMENT

Most of the following tasks require certain experience and advanced maintenance and diagnostic equipment. Therefore, we recommend you to entrust this work to specialized or authorized workshops.

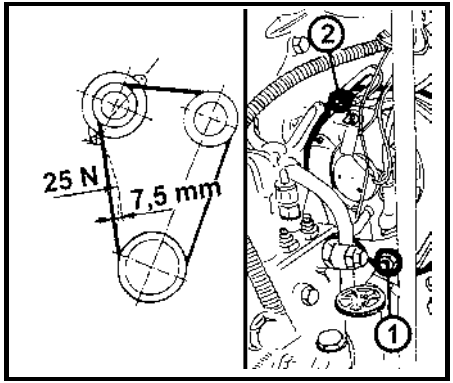

F273

TENSIONING THE V-BELT

If the V-belt is properly tensioned - its deflection must be 7.5 mm when one belt is subject to the force of 25 N.
Tension the V-belt to the prescribed value after releasing the fixation screws (1, 2).

*TENSIONING THE V-BELT OF THE AC COMPRESSOR

If the V-belt is properly tensioned - its deflection must be 7.5 mm when the belt is subject to the force of 25 N.
Tension the V-belt to the prescribed value after releasing the fixation screws of the AC compressor.

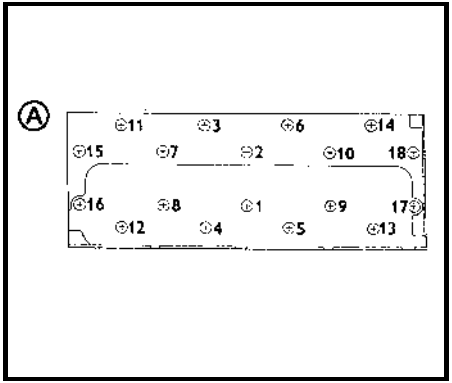

F_02_201

RETIGHTENING THE CYLINDER HEAD

The engine cylinder head is retightened with the cold engine in the prescribed order.

Tractor type	Z 95 - Z 125 - (A)
Torque	160 - 180 Nm
Valve clearance	0.25 ± 0.05 mm

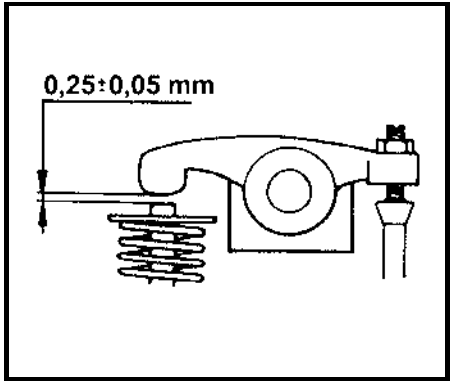

F276

ADJUSTING THE VALVE CLEARANCE

In the Z95 - Z125 tractors the clearance of the valves is adjusted when the engine is cold. The proper clearance of the suction as well as exhaust valves is 0.25±0.05 mm.

Alternation of the rocker arm movements:

On movement of the rocker arm of cylinder no.	the valve of the following cylinder is adjusted
1	4
2	3
3	2
4	1

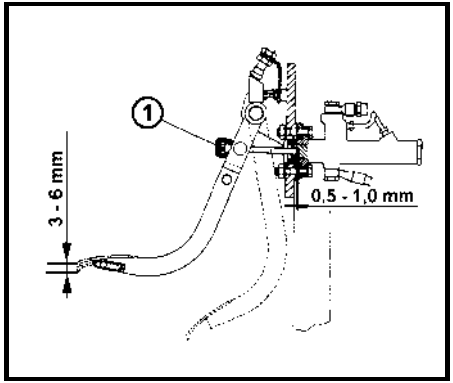

F_02_204

ADJUSTING THE PLAY OF THE BRAKE PEDALS

The proper play between the piston rod of the brake pedals and the piston of the main cylinder is 0.5 - 1.0 mm (3 - 6 mm measured at the edge of the brake pedals with the pedals disconnected). Perform the adjustment with the pedals disconnected and after releasing the adjustment nut (1) that the piston rod is screwed in.

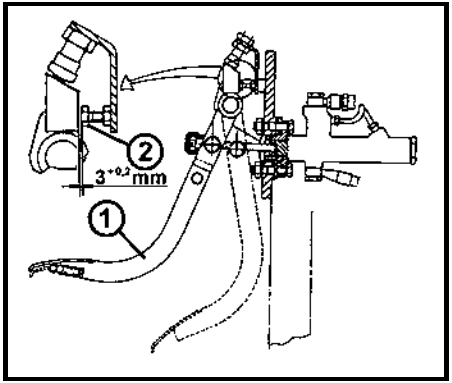

C756

BLEEDING THE BRAKE SYSTEM OF THE TRACTOR

Do the bleeding with the pedals disconnected, for each wheel separately, as follows:

Note: *When bleeding the hydraulic brake circuits you must always depress one pedal (1) by $7.5^{+0,5}$ mm, measured at the piston rod of the main brake cylinder, which amounts to $3^{+0,2}$ mm at the adjustment screw (2) and do the bleeding with the other pedal. To maintain the proper distance insert between the pedal (1) and adjustment screw (2) a gauge with the corresponding thickness, i.e. $3^{+0,2}$ mm.*

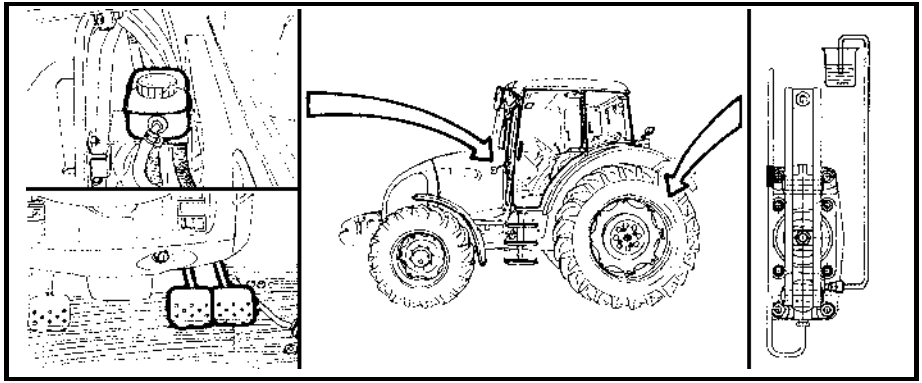

F_02_147

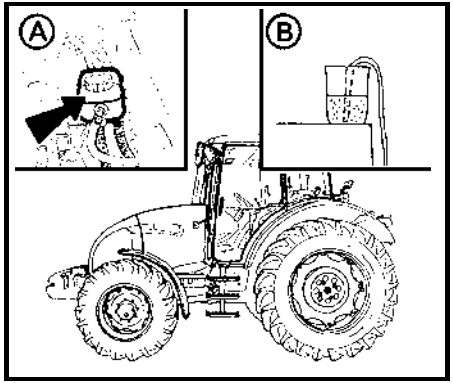

F_02_128

BLEEDING THE REAR BRAKE SYSTEM

–Check the quantity of brake liquid in the compensation tank; fill up new liquid to the maximum level.

–Slide a hose onto the corresponding brake cylinder screw and immerse its other end to the bottom of a transparent container partly filled with the brake liquid.

–Depress the brake pedal, release the bleeding screw by 1/4 turn at the most, further depress the brake pedal and tighten the bleeding screw.

–Release the brake pedal and repeat the procedure until air bubbles stop escaping from the hose.

During the bleeding observe the liquid level in the compensation tank to avoid aspiration of air (A).

⚠ *Make sure that the hose end is continuously immersed in the liquid and hold the container as high as possible (B). After two years you must replace the brake liquid in the whole brake circuit.*

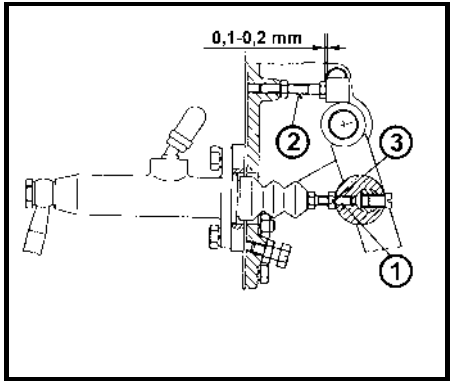

F_02_205

ADJUSTING THE PLAY OF THE CLUTCH PEDAL

The proper play between the pedal piston rod and the piston of the main cylinder is not adjusted - it is set by the manufacturer. What should be adjusted is the mutual position of the piston rod and piston rod lug (1) so that the piston rod can be extended from the cylinder as much as possible and the play between the pedal and the upper stop screw (2) can be 0.1 - 0.2 mm at the same time. Then, the piston rod is secured with the nut (3) with regard to the lug. After the adjustment check whether the dust cap of the cylinder is not deformed and repair it by hand if necessary.

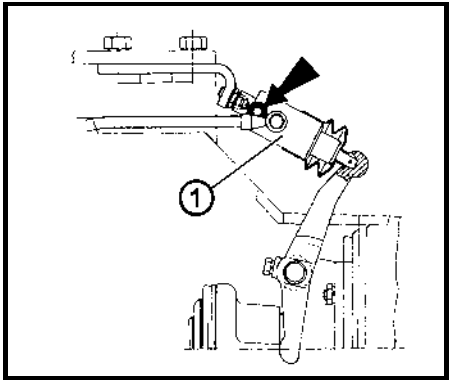

F284

BLEEDING THE HYDRAULIC CIRCUIT OF THE CLUTCH

Do the bleeding in the same way as in the case of bleeding of the brake system. The bleeding screw of the clutch disengagement hydraulic circuit is located on the clutch disengagement cylinder (1).

⚠ *After two years you must replace the brake liquid in the whole brake circuit, including the clutch disengagement hydraulic circuit.*

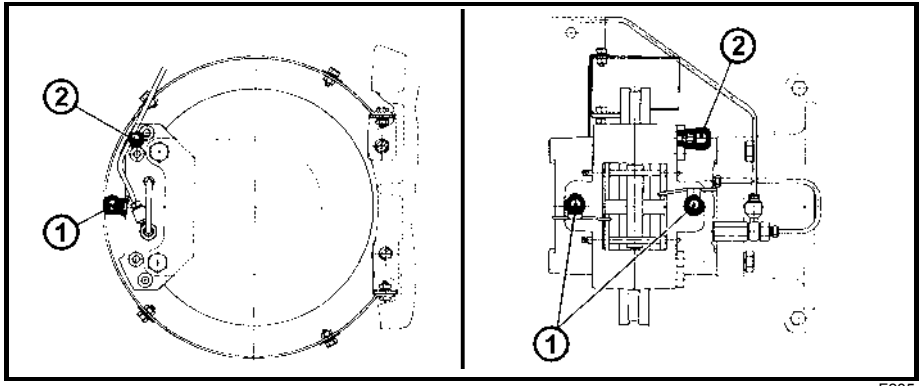

F285

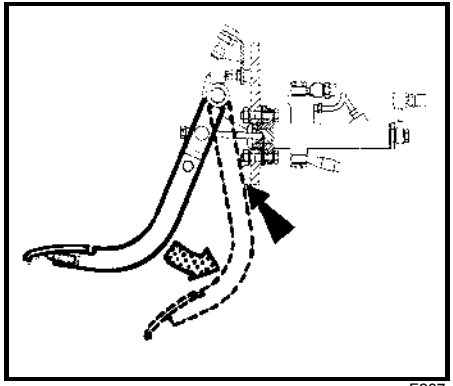

F287

BLEEDING THE FRONT CARDAN BRAKE

Bleeding of the brake systems with installed Cardan brake in tractors with the front driving axle must be started gradually with both the pairs of the stirrup cylinders. One pair of the brake stirrup cylinders has 2 bleeding screws (1), the other pair has 3 bleeding screws (2). Do the bleeding with the pedals disconnected in such a way that you depress one of the pedals slightly and perform the bleeding of one pair of the brake stirrup cylinders of the 1st circuit with the other pedal. Then, change the pedals and bleed the other pair of the brake stirrup cylinders of the 2nd circuit. After bleeding of the front Cardan brake bleed the rear brake.

FOOT BRAKE CHECK

With the foot brake pedals disconnected depress the pedal with the maximum force of approx 500 N. If the pedal can be depressed almost to the stop consisting in the boss on the bottom part of the console, the foot brake must be adjusted.

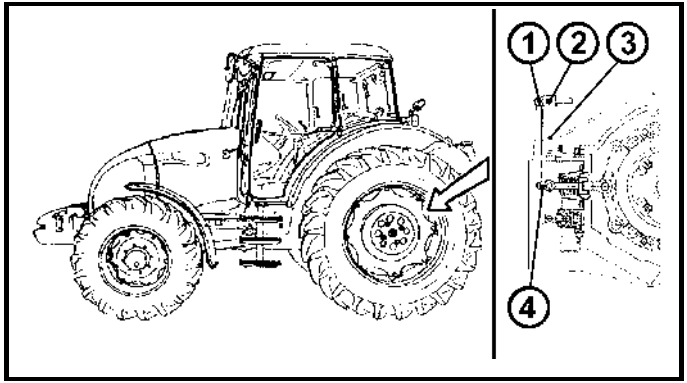

F_02_139

FOOT BRAKE ADJUSTMENT

Before the adjustment of the foot brake the parking brake lever must be in the unbraked position and between the nut (1) and pin (2) in the disc brake lever (3) there must be some play. If you find zero play, loosen the nut (1) slightly. Lift both the rear wheels and instruct your assistant to turn one of them by hand. At the same time tighten the adjustment nut (4) until the wheel cannot be turned. Stop tightening. Then, loosed the adjustment nut by 5/6 of a turn (5 tabs of the nut) and check the turning of the wheel.

After this basic adjustment check the operation of the foot brakes to see whether the braking effect of both the wheels is the same. If not, loosen the adjustment nut (4) by the required value on the side where the braking effect is higher.

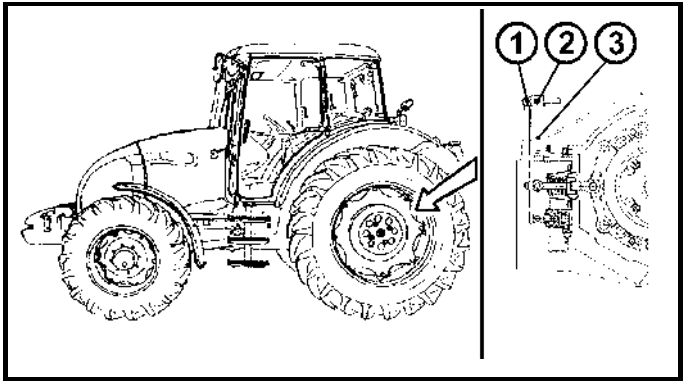

F_02_138

PARKING BRAKE ADJUSTMENT

The adjustment of the parking brake follows after the adjustment of the foot brake. The parking brake lever must be in the unbraked position. Perform the adjustment in such a way that the self-locking nut (1) of the parking brake draw-bar can touch the pin (2) in the disc brake lever (3).

After this basic adjustment check the operation of the parking brake to see whether the braking effect of both the wheels is the same. If not, loosen the adjustment nut (1) by the required value on the side where the braking effect is higher.

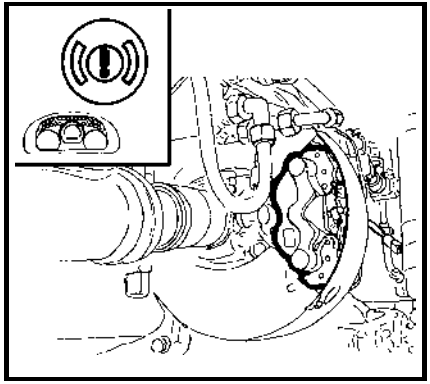

F291

REPLACING BRAKE SEGMENTS OF THE FRONT CARDAN BRAKE

The brake segments must be replaced if the lining thickness drops to 2 mm. The brake segments are accessible after removing of the two locking pints that secure the covering metal sheet.

Wear of the brake segments of the Cardan brake is signalled by the indicator on the dashboard.

Note: The brake lining of the Cardan brake contains contacts that connect the electric indicating circuit when the lining gets worn.

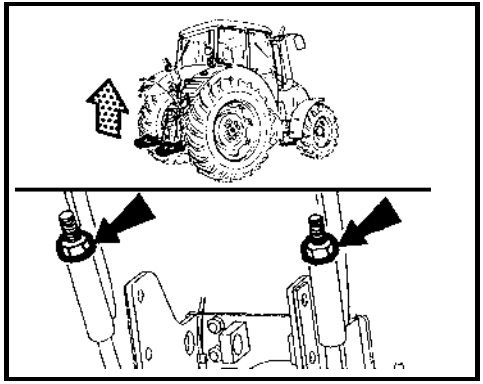

F_02_142

ADJUSTMENT OF THE LIFTING DRAW-BARS OF THE HITCH FOR A SINGLE-AXLE SEMI-TRAILER

–Raise the hydraulic arms to the upper - transport position with the position control selected and the vibration compensator off.

–Screw the nuts on the adjustable draw-bars towards the guiding pipe without any play.

–Tighten the nuts by another 4.5 turns.

–Check whether it is possible to tilt off the supporting hooks freely.

–By lowering and repeated lifting of the hydraulic arms to the transport position check whether the engine does not tend to “stall" at the idle speed - the relief valve of the hydraulic pump must not be in operation.

–Then, lower the arms slightly.

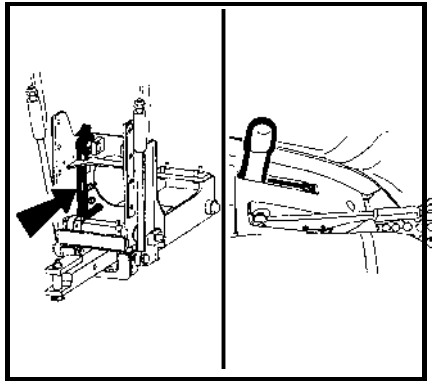

F_2_132

ADJUSTING THE BOWDEN CABLE

It is performed if the carrier with the towing hook is in contact with the supporting hooks. The Bowden cable must be tensioned to avoid any play of the control lever in the cab. Then, the cable is secured against loosening with a nut.

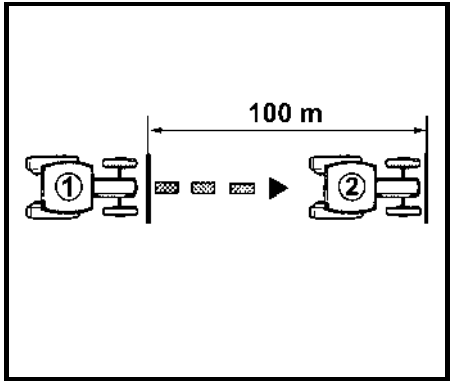

F_02_129

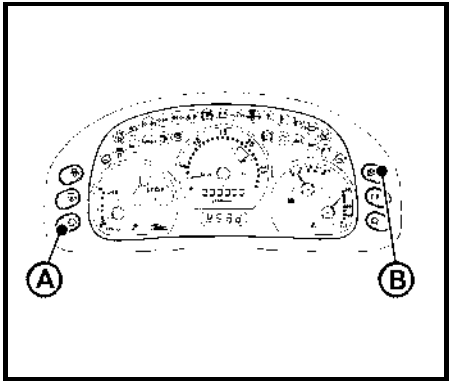

F_02_130

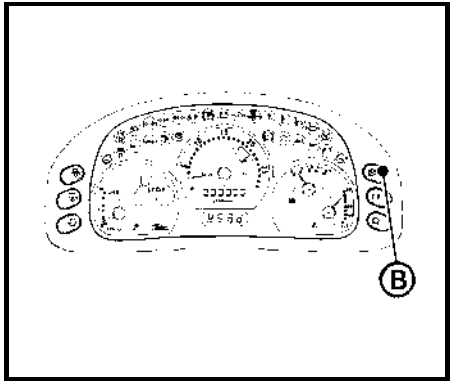

F_02_131

CALIBRATION OF THE TRAVELLING SPEED OF THE DIGITAL DASHBOARD

After the assembly in the production plant the dashboard is calibrated.

Perform repeated calibration:

- In case of a considerable wear of the tyres
- When installing new tyres
- When replacing the dashboard.

CALIBRATION SEQUENCE

- In a suitable area mark a 100m long track.
- Inflate the tractor tyres to the prescribed pressure, see the tables of this Manual.
- Start the engine.
- Drive the tractor to the beginning of the 100m track.
- Simultaneously press the button **(A)** and button **(B)**. Hold the buttons depressed for 7 s. The dashboard is switched over to the calibration mode. **"Start"** will start flashing on the display.
- Press the button **(B)**. **"Stop"** will start flashing on the display.
- Drive the tractor at a steady speed of approx. 10 km/h.
- The display will show the number of impulses detected by the travelling sensor.
- After covering the whole distance of 100 m stop the tractor at the marked end of the track (see fig. F_02_129).
- Press the button **(B)**. This way you will save the number of impulses detected by the travelling sensor in the memory. The dashboard is calibrated and ready for operation.

NOTES

MAIN TECHNICAL PARAMETERS

MAIN TECHNICAL PARAMETERS

MAIN DIMENSIONS OF THE TRACTOR (MM)		
		note
Outline length with hitches with the front three-point hitch lowered	4708	without ballast weights
Outline length with hitches without the front three-point hitch	4067	without ballast weights
Width over the rear fenders	1890	
Height to the exhaust outlet	2694 - 2780	depending on tyre dimensions
Tractor height to the upper cab edge	2639 - 2725	depending on tyre dimensions
Inner height under the front axle support	468 - 508	depending on tyre dimensions
Height of the mouth of the stage hitch in the top position (mouth centre)	1012 - 1098	depending on tyre dimensions
Height of the rear PTO	760 - 845	depending on tyre dimensions
Height of the front PTO	636 - 806	depending on tyre dimensions
Wheel base	2328	

MAIN TECHNICAL PARAMETERS

TECHNICAL DATA OF TRACTORS					
Tractor type		FORTERRA 95	FORTERRA 105	FORTERRA 115	FORTERRA 125
Engine type		1005	1305	1405	1505
Engine kind		diesel, four-stroke with direct fuel injection, turbocharged			
Engine design		in-line, vertical, water cooled			
Number of cylinders		4	4	4	4
Displacement	cm^3	4156	4156	4156	4156
Bore x stroke	mm	105x120	105x120	105x120	105x120
Nominal speed	rpm	2200	2200	2200	2200
Injection sequence		1-3-4-2	1-3-4-2	1-3-4-2	1-3-4-2
Compression ratio		17	17	17	17
Max. overspeed	rpm	2460	2460	2460	2460
Idle speed	rpm	800±25	800±25	800±25	800±25
Net power at the nominal speed	kW	66	74	81	90
Fuel consumption at the nominal engine speed (2200 rpm)	$g.kW^{-1}.h^{-1}$	255	252	264	260
Max. torque (1,480 rpm)	Nm	391	440	480	525
Inclination Mt	%	36.5	37	36.5	34.4
Fuel consumption at the maximum torque (1,480 rpm)	$g.kW^{-1}.h^{-1}$	218	218	226	224
Engine lubrication		pressurized with a Gerotor pump			
Maximum consumption of oil after 100 hours of engine running-in	$g.kW^{-1}.h^{-1}$	0.7	0.7	0.7	0.7
Oil pressure at the nominal engine speed and the oil temperature of 80°C	MPa	0.2 - 0.5	0.2 - 0.5	0.2 - 0.5	0.2 - 0.5

MAIN TECHNICAL PARAMETERS

TECHNICAL DATA OF TRACTOR ENGINES					
Tractor type		FORTERRA 95	FORTERRA 105	FORTERRA 115	FORTERRA 125
Engine type		1005	1305	1405	1505
Minimum oil pressure at the engine speed of 750 rpm and oil temperature of 80°C	MPa	0,05			
Max. coolant temperature	°C	106			
Timing type		OHV			
Oil cleaner		Full-flow, single-use type			
Fuel cleaner		Single-stage with a replaceable element			
Injection pump type		PP4M10P1i-3775	PP4M10P1i-3776	PP4M10P1i-3767	PP4M10P1i-3766
Nozzle type		DO150s428-4104	DOP150s428-4104	DOP150s526-4150	DOP150s526-4150
Injector opening pressure	MPa	25-08			
Timing angle	°	12	12	9+1	
Valve clearance with the engine cold –suction –exhaust	 mm mm	 0.25±0.05 0.25±0.05	 0.25±0.05 0.25±0.05	 0.25±0.05 0.25±0.05	 0.25±0.05 0.25±0.05

MAIN TECHNICAL PARAMETERS

MAX. PERMISSIBLE LOAD OF THE CARRARO 20.19 FRONT AXLE (KG)					
Travelling speed km/h	Wheel track (mm)				
	1590 - 1655	**1730 - 1740**	**1800-1880**	**1890 -1955**	**2030 - 2040**
8	5600	5100	4400	4100	3800
20	4300	3900	3380	3150	2900
30	4300	3900	3380	3150	2900
40	4300	3900	3380	3150	2900

The load only refers to the entire axle; the permissible load with regard to tyres is specified in the tab. “Load-bearing capacity of the front tyres”.

MAX. PERMISSIBLE LOAD OF THE REAR AXLE (KG)					
Travelling speed km/h	Wheel track (mm)				
	1500	**1575**	**1650**	**1725**	**1800**
8	7500	7500	7300	6800	6500
20	6000	6000	5900	5500	5150
30	6000	6000	5900	5500	5150
40	5500	5500	5500	5500	5150

The load only refers to the entire axle; the permissible load with regard to tyres is specified in the tab. “Load-bearing capacity of the rear tyres”.

MAIN TECHNICAL PARAMETERS

MAX. PERMISSIBLE WEIGHT OF THE “TRACTOR + MACHINE” SET (KG)	
Travelling speed (km/h)	Maximum weight of the set
8	9000
20	8000
30	8000
40	8000

MANOEUVRABILITY CONDITION	
Travelling speed (km/h)	Weight of the front axle of the tractor out of the total weight of the carrying set (%)
max. 40	min. 25
max. 15	min. 18

MAIN TECHNICAL PARAMETERS

LOAD-BEARING CAPACITIES OF THE FRONT TYRES												
Tyre dimensions	Travelling speed											
	40 km.h^{-1}			30 km.h^{-1}			20 km.h^{-1}			8 km.h^{-1}		
	Tyre load-bearing capacity (kg)			Tyre load-bearing capacity (kg)			Tyre load-bearing capacity (kg)			Tyre load-bearing capacity (kg)		
	Tyre 1 pc	Axle	Inflation (kPa)	Tyre 1 pc	Axle	Inflation (kPa)	Tyre 1 pc	Axle	Inflation (kPa)	Tyre 1 pc	Axle	Inflation (kPa)
12.4-24	1140	2280	220	1425	2850	220	1710	3420	220	1995	3990	220
12.4R24	1360	2720	160	1455	2910	160	1670	3340	160	2040	4080	160
12.4-28 10PR	1432	2864	280	1790	3580	280	1950	3900	250	2505	5010	280
13.6R24	1450	2900	160	1550	3100	160	1780	3560	160	2175	4350	160
14.9-24	1408	2816	180	1760	3520	180	1950	3900	160	2464	4930	180
14.9R24	1700	3400	160	1820	3640	160	1950	3900	150	2550	5100	160
380/70R24	1650	3300	160	1765	3530	160	1950	3900	150	2475	4950	160
420/70R24	1900	3800	160	1950	3900	160	1950	3900	130	2550	5100	140

The load-bearing capacity values refer to the front wheel track of 1730 - 1740 mm.

Note: The 380/70R24 tyre is a dimensional equivalent of the 13.6R24 tyre.
The 420/70R24 tyre is a dimensional equivalent of the 14.9R24 tyre.

The specified inflation values are minimum valued adapted to the current tyre load so that the tyre deformation can remain in the range in which all the operation requirements are met.

During operation on a hard base it is suitable with regard to slippage and abrasion of the tyre to increase the pressure by 30 kPa.

CHANGE OF THE LOAD-BEARING CAPACITY OF THE FRONT TYRES (%)		
Travelling speed (km/h)	**diagonal**	**radial**
8	+ 40	+ 50
20	+ 20	+ 23
30	0	+ 7
40	- 20	0

MAIN TECHNICAL PARAMETERS

LOAD-BEARING CAPACITIES OF THE REAR TYRES												
Tyre dimensions	Travelling speed											
	40 km.h^{-1}			30 km.h^{-1}			20 km.h^{-1}			8 km.h^{-1}		
	Tyre load-bearing capacity (kg)			Tyre load-bearing capacity (kg)			Tyre load-bearing capacity (kg)			Tyre load-bearing capacity (kg)		
	Tyre 1 pc	Axle	Inflation (kPa)	Tyre 1 pc	Axle	Inflation (kPa)	Tyre 1 pc	Axle	Inflation (kPa)	Tyre 1 pc	Axle	Inflation (kPa)
16.9-34	1900	3800	170	2380	4760	170	2750	5500	170	3330	6660	170
16.9R34	2430	4860	160	2600	5200	160	2750	5500	150	3400	6800	150
18.4-34	2050	4100	140	2565	5130	140	2750	5500	120	3400	6800	130
18.4R34	2750	5500	160	2750	5500	160	2750	5500	120	3400	6800	120
16.9-38	2060	4120	170	2575	5150	160	2750	5500	150	3400	6800	160
16.9R38	2575	5150	160	2750	5500	160	2750	5500	130	3400	6800	130
18.4-38	2170	4340	140	2715	5430	140	2750	5500	110	3400	6800	110
18.4R38	2750	5500	140	2750	5500	140	2750	5500	110	3400	6800	120
480/70R38	2750	5500	150	2750	5500	150	2750	5500	110	3400	6800	110
520/70R38	2750	5500	120	2750	5500	120	2750	5500	90	3400	6800	90

The load-bearing capacity values refer to the rear-wheel track of 1725 mm.

Note: The 480/70R38 tyre is a dimensional equivalent of the 16.9R38 tyre. The 570/70R38 tyre is a dimensional equivalent of the 18.4R38 tyre.

The specified inflation values are minimum valued adapted to the current tyre load so that the tyre deformation can remain in the range in which all the operation requirements are met.

During operation on a hard base it is suitable with regard to slippage and abrasion of the tyre to increase the pressure by 30 kPa.

CHANGE OF THE LOAD CAPACITY OF THE REAR TYRES (%)		
Travelling speed (km/h)	**diagonal**	**radial**
8	+ 40	+ 50
20	+ 20	+ 23
30	0	+ 7
40	- 20	0

MAIN TECHNICAL PARAMETERS

PERMITTED COMBINATIONS OF WHEELS FOR TRACTORS			
Front wheels		**Rear wheels**	
Tyre dimen-sions	Equivalent	Tyre dimensions	Equivalent
12.4R24	12.4-24	18.4R34	18.4-34
		16.9R38	480/70R38
13.6R24	380/70R24	18.4R34	18.4-34
		16.9R38	480/70R38
		18.4R38	18.4-38 520/70R38 600/65R38
12.4-28	420/70 R24 14.9R24 14.9-24	18.4R38	18.4-38 520/70R38 600/65R38
		16.9R38	480/70R38

Caution! *The combinations of dimensions of the front and rear wheels are limited by the size of the toothed wheel in the front drive box. Always consult any changes of the dimensions of the front and rear tyres except the equivalents of the tyres installed on the tractor with your dealer.*

MAIN TECHNICAL PARAMETERS

POWER	Tractor type			
	FORTERRA 95	FORTERRA 105	FORTERRA 115	FORTERRA 125
Engine type (TIER III)	**Z 1005**	**Z 1305**	**Z 1405**	**Z 1505**
PTO power (kW±2%) at the nominal engine speed and engaged 1000 rpm of the PTO				
Engine in the running-in stage (until 100 hours)	53.6	60.8	66.5	73.9
Engine after the running-in stage (from 100 hours on)	56.5	64.0	70.0	77.8
LIFTING FORCE OF THE THREE-POINT HITCH				
Lifting force at the end of the bottom draw-bars of the rear three-point hitch in the whole lifting range at the maximum usable pressure, with the auxiliary cylinder (kN).	48.4			
Lifting force at the end of the lower draw-bars of the front three-point hitch in the whole lifting range at the maximum usable pressure (kN) - Zuidberg front three-point hitch	35			

MAIN TECHNICAL PARAMETERS

TRACTOR SPEEDS (40 KM/H)

Tractor equipped with a four-speed gearbox with the speed of **40 km/h**, reduction, a three-stage torque multiplier, reversing and the front driving axle (24 forward speeds, 18 reverse speeds)

FORWARD SPEEDS

Gear		Overall gear ratio	Tractor speed at the nominal engine speed	
			16.9-38 (795 mm)	18.4-38 (820 mm)
4 Hi	H	17.920	36.8	37.9
	M	20.719	31.8	32.8
	L	23.985	27.5	28.3
3 Hi	H	25.653	25.7	26.5
	M	29.661	22.2	22.9
	L	34.336	19.2	19.8
2 Hi	H	38.859	17.0	17.5
	M	44.930	14.7	15.1
	L	52.012	12.7	13.1
1 Hi	H	59.989	11.0	11.3
	M	69.360	9.50	9.80
	L	80.293	8.21	8.47
4 Lo	H	74.089	8.90	9.18
	M	85.663	7.70	7.94
	L	99.166	6.65	6.86
3 Lo	H	106.063	6.22	6.41
	M	122.631	5.38	5.54
	L	141.961	4.64	4.79
2 Lo	H	160.663	4.10	4.23
	M	185.760	3.55	3.66
	L	215.041	3.07	3.16
1 Lo	H	248.023	2.66	2.74
	M	286.768	2.30	2.37
	L	331.969	1.99	2.05

REVERSE SPEEDS

Gear		Overall gear ratio	Tractor speed at the nominal engine speed	
			16.9-38 (795 mm)	18.4-38 (820 mm)
3 Hi	H	22.187	29.7	30.6
	M	25.653	25.7	26.5
	L	29.696	22.2	22.9
2 Hi	H	33.608	19.6	20.2
	M	38.858	17.0	17.5
	L	44.983	14.7	15.1
1 Hi	H	51.883	12.7	13.1
	M	59.987	11.0	11.3
	L	69.443	9.49	9.79
3 Lo	H	91.730	7.19	7.41
	M	106.059	6.22	6.41
	L	122.777	5.37	5.54
2 Lo	H	138.952	4.74	4.89
	M	160.658	4.10	4.23
	L	185.981	3.54	3.66
1 Lo	H	214.506	3.07	3.17
	M	248.015	2.66	2.74
	L	287.109	2.30	2.37

The fourth gear speed cannot be engaged!

Wheels	Equivalent
16.9-38	16.9 R 38; 480/70 R 38
18.4-38	18.4 R 38; 520/70 R 38
14.9-24	14.9 R 24; 420/70 R 24
	12.4 R 28; 360/70 R 28

MAIN TECHNICAL PARAMETERS

INDEPENDENT REAR PTO		
Gear ratio	PTO speed / engine speed	PTO speed / engine speed
3.54	540/1913	621/2200
1.95	1000/1950	1128/2200
2.89	750/2171	760/2200

SPEED OF THE ZUIDBERG FRONT PTO		
Turning direction	**PTO speed / engine speed**	**PTO speed / engine speed**
right (a)	1000 / 1920	1146 / 2200
∗left (b)	1000 / 2000	1100 / 2200

∗ - option

E80

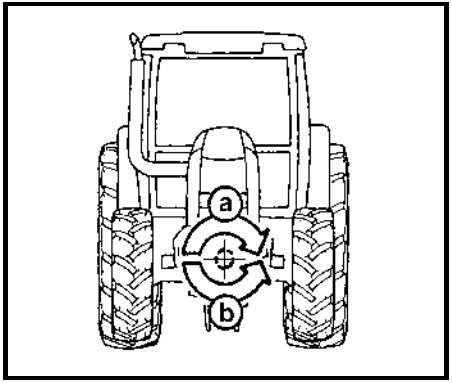

MAIN TECHNICAL PARAMETERS

OUTER OUTLINE AND TRACK TURNING DIAMETER						
Track width	front	1.730 mm	Tyre dimensions	front	420/70 R24	14.9 R24
	rear	1.725 mm		rear	520/70 R38	18.4 R38
Track diameter	Without engagement of the front driving axle				12.410 mm	11.280 mm
	Without engagement of the front driving axle with braking of the inner rear wheel				10.695 mm	9.690 mm
	With engagement of the front driving axle				13.130 mm	12.180 mm
	With engagement of the front driving axle with braking of the inner rear wheel				8.795 mm	8.360 mm
Outline diameter	Without engagement of the front driving axle				12.625 mm	11.800 mm
	Without engagement of the front driving axle with braking of the inner rear wheel				11.230 mm	11.140 mm
	With engagement of the front driving axle				13.580 mm	12.750 mm
	With engagement of the front driving axle with braking of the inner rear wheel				9.435 mm	8.945 mm

NOTES

INDEX

INDEX

INDEX

INDEX

INDEX

Operator's manual
Forterra 95
Forterra 105
Forterra 115
Forterra 125

Edition: I-300-2009
Publication No.: 22.22.12.488
Zetor Tractors s.r.o.
Department of Technical Documentation
Trnkova 111
632 00

Zetor