ZETOR

8641
9641
11741.4C
10641
11441
11741
12441

2/2007

Supplement
Operator's manual

ZETOR

The supplement to the instruction manual for tractors with 4-cylinder engines, type Z 11741.4C with engines TIER II and types Z 9641, Z 10641, Z 11441, Z 12441 with engines TIER III, which is hereby presented to you, acquaints you with operation and maintenance of your new tractor.
Despite the fact that many of you have rich experience with operation of other tractors, please read thoroughly this manual.
You fan find here many pieces of new information get perfect knowledge how to utilise the tractor with various works.
When following the given principles of operation and maintenance of the tractor and safe driving, your tractor will become reliable partner for years.
We wish you thousands of contented worked off hours.

ZETOR
Brno

The data on technical specifications, construction, equipment, materials and appearance are valid in time of printing. The manufacturer reserves the right of changes.

CONTENTS

TRACTORS Z 9641, Z 10641, Z 11441, Z 11741.4C, Z 12441,

Tractors with 4-cylinder engines:

Zetor 9641 Forterra turbo..... 66 kW
Zetor 106 41 Forterra turbo..... 74 kW
Zetor 114 41 Forterra turbo..... 81 kW
Zetor 117 41.4C Forterra turbo ..... 90 kW
Zetor 124 41 Forterra turbo..... 90 kW

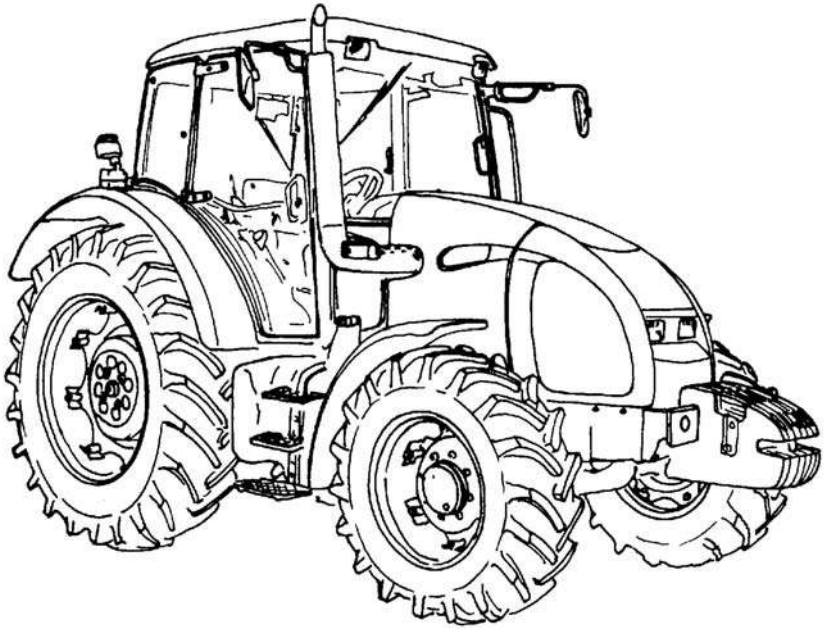

F_02_10

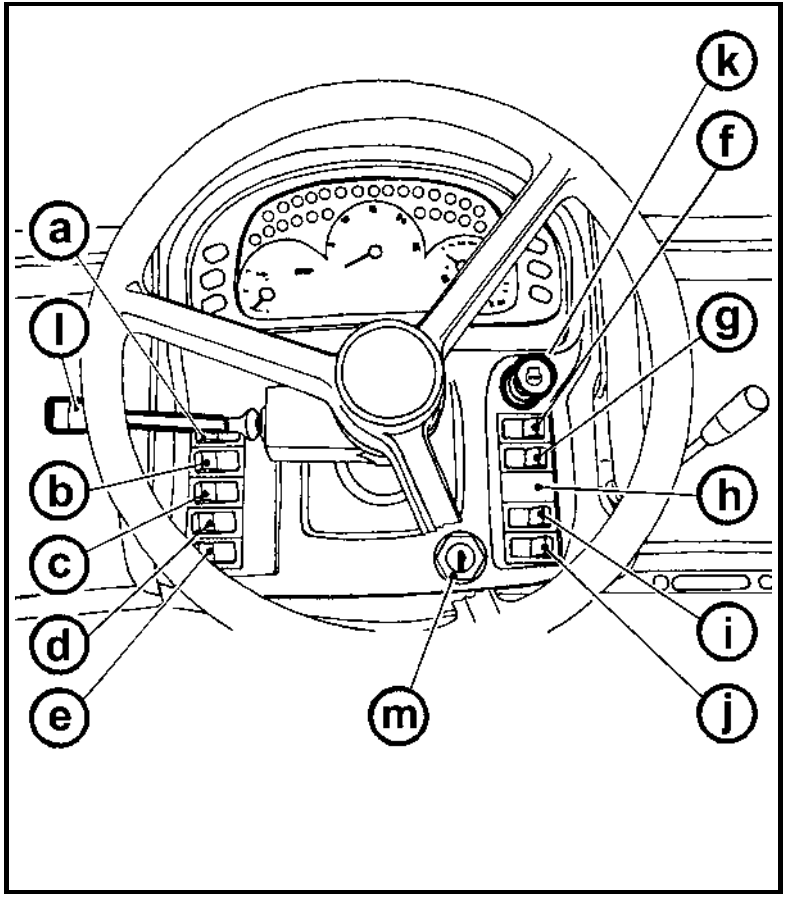

F101

REVERSE SWITCHES, SWITCHES AND LEVERS

a - Switch of lights (off, parking, main)
b - Reverse switch of low beams in the front mask and working lights in the cab.
c - Switch of the fog light (off/on). Function of the fog light is indicated by an illuminated symbol on the switch.
d - Switch of the rear working headlamp (off/on). Function of the working headlamp is indicated by an illuminated symbol on the switch.
e - Switch of warning flashlights.
f - Switch of the front driving axle. Switched on front driving axle is indicated by an illuminated symbol on the switch.
g - Switch of the beacon (off/on).
h - Free position.
i - Switch of torque multiplier preselection.
j - Pushbutton of the differential lock.
k - Engine stopping device.
l - Reverse switch of direction indicators, low and high beams and acoustic horn and flash.
m - Ignition switch

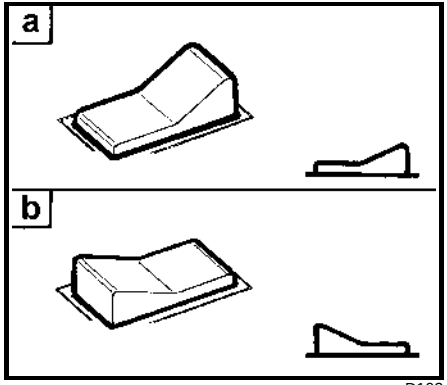

D102

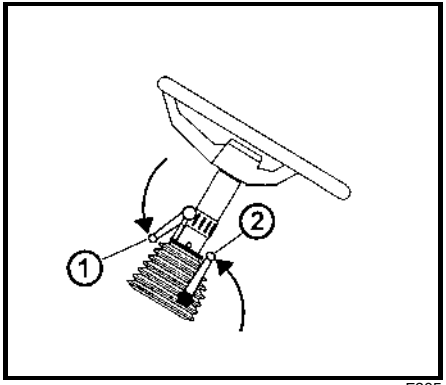

F205

SWITCH OF TORQUE MULTIPLIER PRESELECTION (i)

a - Preselection switch off
b - Preselection switch on

Preselection switch on - position (b) - is indicated by an illuminated symbol on the switch.
In case the preselection switch is on (b), each depression of the clutch pedal engages automatically the medium stage pf the multiplier **M** – indicator with a symbol of a turtle is lit on the dashboard (see the chapter Driving / indication of function of the multiplier in the ”Instruction manual“).
After release of the clutch pedal the multiplier can be controlled using the pushbuttons on the speed change lever.

When starting the engine, the switch must be in position off (a).

TILTABLE STEERING WHEEL

The steering wheel tilting column enables variable adjustment of the steering wheel (height and angle adjustment).

Steering wheel height adjustment
Adjustment is carried out by extraction or retraction of the steering wheel after unlocking of arrestment by turning of the lever (1) in direction of the arrow. After adjustment lock the lever (1) by its tightening against direction of the arrow.

Steering wheel angle adjustment
Adjustment is carried out by tilting of the steering wheel after unlocking of the arrestment by turning of the lever (2) in direction of the arrow. After adjustment lock the lever (2) by its tightening against direction of the arrow.

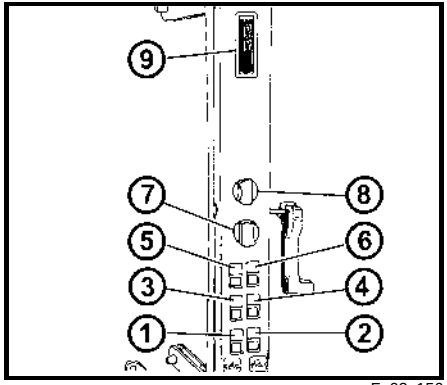

F_02_156

CONTROL PANEL ON THE CAB RIGHT COLUMN

1- ∗Switch of the front output shaft
2- Switch of the rear output shaft
3- Switch of the front working lights on the cab roof
4- Switch of rear working lights on the cab roof
5- ∗Switch of heating of the rear-view mirrors
6- ∗Switch of heating of the rear window
7- Switch of rear wiper
8- 2-position reverse switch of the front wiper and control of the front wind-screen washer
9- Cab lighting

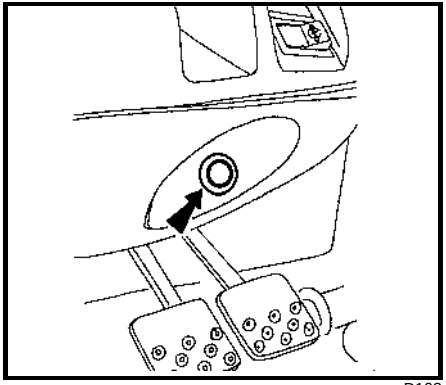

D103

LIGHTER (Z 11741.4C)

The lighter is installed on the face of the driving console, under the dashboard. After its removal the socket can be used for power supply of some additional consumers.

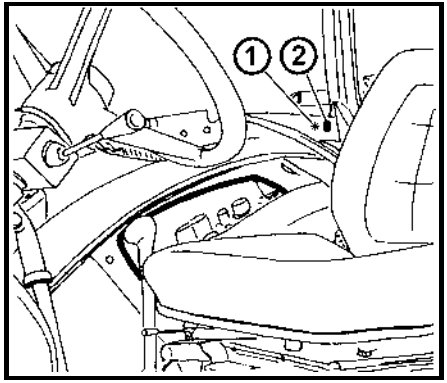

LIGHTER AND 3-PIN SOCKET

The lighter (1) and 3-pin socket (2) are installed on the rear right mud guard panel.

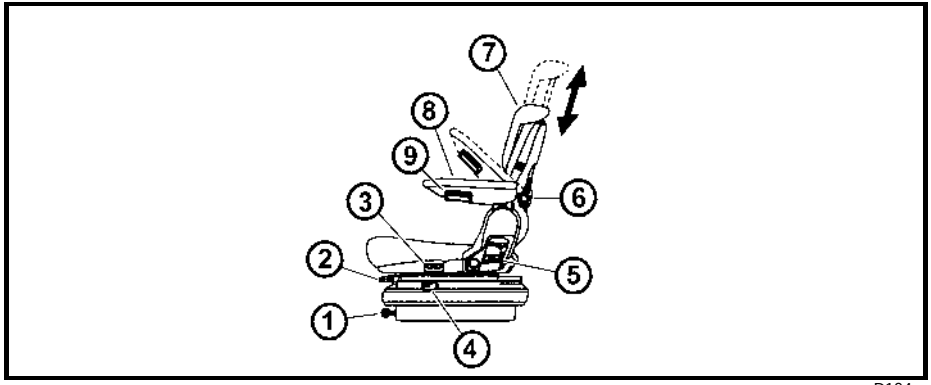

D104

DRIVER'S SEAT GRAMMER MAXIMO

1- Controller of adjustment of seat air hitch according to the driver's weight
2- Lever of seat longitudinal adjustment (located on the seat right side)
3- Controller of the seat turning device (the seat can be turned by 20° to both sides)
4- Controller of absorption of seat vibrations (tilting of the controller forwards engages floating position of the seat)
5- Controller of adjustment of the seat backrest
6- Controller of adjustment of the backrest shape
7- Height adjustable backrest (pulling or pushing in direction of arrow adjusts the backrest within 170mm range)
8- Tiltable armrest
9- Controller of adjustment of the armrest (turning of the controller adjusts height of the armrest)

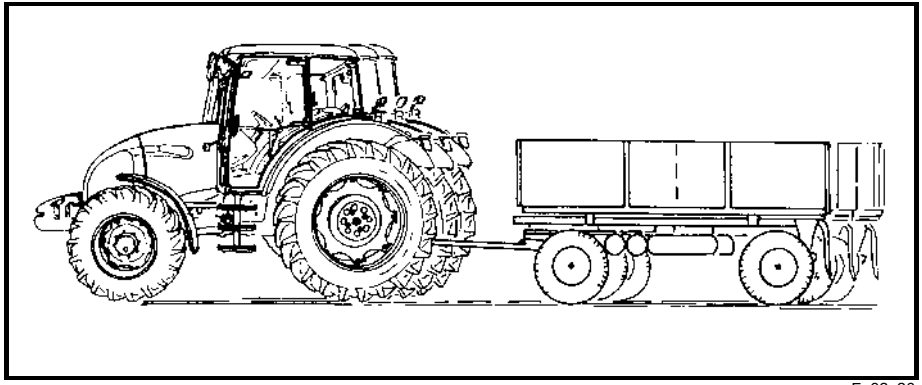

F_02_36

MOVING OFF

1. Select road or reduced gears.
2. Depress the clutch pedal.
3. Move the main shifting lever and reversing lever to neutral position, switch off the PTO switches on the right column of the cab.
4. Start up the engine.
5. Adjust speed to 750-800/min^{-1}.
6. Move the reversing lever to the desired driving direction (forward or backward).
7. Select the desired moving off driving gear.
8. Increase slightly the engine speed.
9. Grasp the hand brake lever.
10. Release the clutch pedal just up to the point of drive engagement and when increasing the engine speed, continue in releasing of the clutch pedal.
11. Release completely the hand brake.
12. Move off smoothly and slowly.

Very fast moving off may cause overloading of the driving mechanism, increased fuel consumption, excessive wearing of tyres and damage to the load. Moving off using the first gear should only be used when driving with a heavy trailer into slope and rough terrain.

When shifting individual gears (1-4) or reverse (F-R), follow instructions given in this manual for moving off and shifting. In case of running engine and tractor in standstill wait approximately 2 seconds after depressing the clutch pedal and then engage the desired gear or reverse.
When shifting in standstill, use also the foot brake to increase safety and prevent any unforeseen situations.

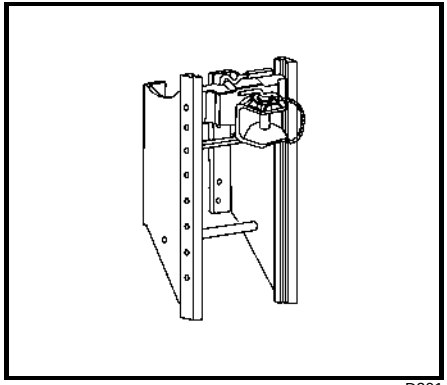

D201

MULTI-STOREY QUICK-ADJUSTABLE HITCH CBM

It is used for connection of double-axle and light single-axle trailers. The guiding device is height adjustable. When working with various agricultural machines it may be necessary to adjust height of the hitch as desired or dismantle it.

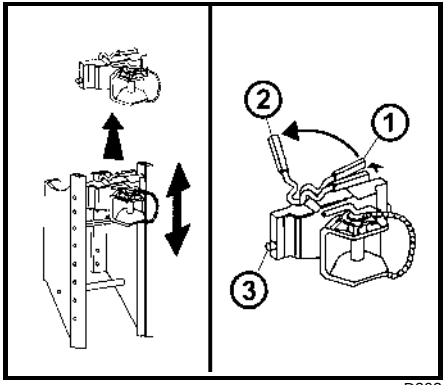

D202

HEIGHT ADJUSTMENT AND DISMANTLING OF THE MULTI-STOREY HITCH CBM

Unlock the lever by its moving in direction of the arrow to position (1); then move it to position (2) to engage the arrestment pins (3). This releases completely the multi-storey hitch that can be adjusted or dismantled.

Release of the lever from position (2) disengages the arrestment pins (3) and the lever returns automatically to its initial position.

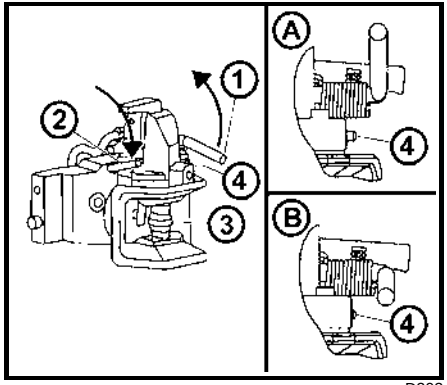

D203

AUTOMATIC GUIDING DEVICE OF THE MULTI-STOREY HITCH CBM >31/03/2007

Moving the lever (1) in direction of the arrow engages the pin (3) in its upper position that is indicated by extracted indicator (4), see Fig. (A).
After sliding the pole eye into the guide device the pin is inserted automatically into the eye of the trailer being attached. The hitch pin (3) can also insert manually by moving the lever (2) in direction of the arrow. Insertion of the pin is indicated by retracted indicator (4), see Fig. (B).

After connecting the trailer, it is always necessary to check whether the indicator (4) is retracted as shown on Fig. (B).

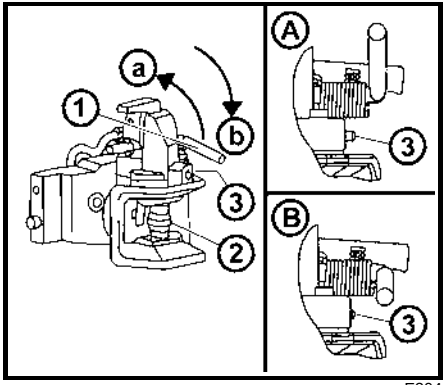

E304

AUTOMATIC GUIDING DEVICE OF THE MULTI-STOREY HITCH CBM 01/04/2007<

Moving the lever (1) in direction of the arrow engages the pin (2) in its upper position that is indicated by extracted indicator (3), see Fig. (A).
After sliding the pole eye into the guide device the pin is inserted automatically into the eye of the trailer being attached. The hitch pin (2) can also insert manually by moving the lever (1) in direction of the arrow. Insertion of the pin is indicated by retracted indicator (3), see Fig. (B).

After connecting the trailer, it is always necessary to check whether the indicator (3) is retracted as shown on Fig. (B).

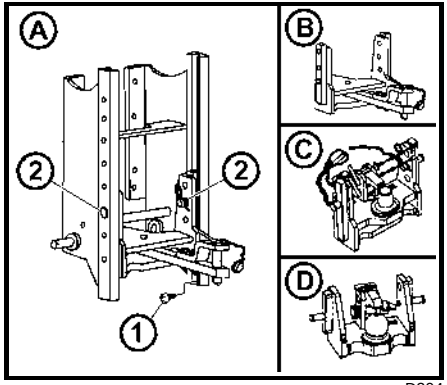

D204

MODULAR SYSTEM OF HITCHES FOR TRAILERS AND SEMI-TRAILERS

Types of modules:
Fig. (B) – Swinging tow bar bracket
Fig. (C) - Swinging tow bar bracket with fixed pin (piton fix)
Fig. (D) – Bracket with ball ø 80

Dismantling, Fig. (A):
1- Remove the lock screw (1).
2- Support the module, unlock and remove the pins (2).
3- Slide the module out of the bracket in downward direction.

Carry our installation in reverse order.

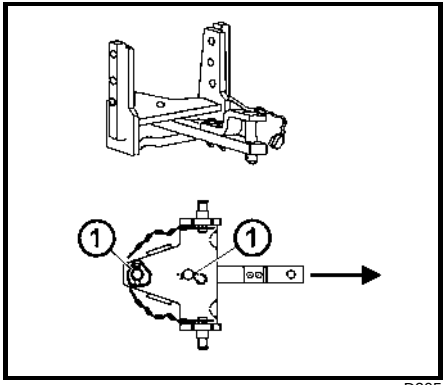

D205

MODULE OF SWINGING TOW BAR BRACKET

The module of the swinging tow bar bracket is mounted in the multi-storey hitch bracket.

SWINGING TOW BAR

Dismantling:
1- Unlock and dismantle the pins (1).
2- Slide out the swinging tow bar in direction of the arrow.

Carry our installation in reverse order.

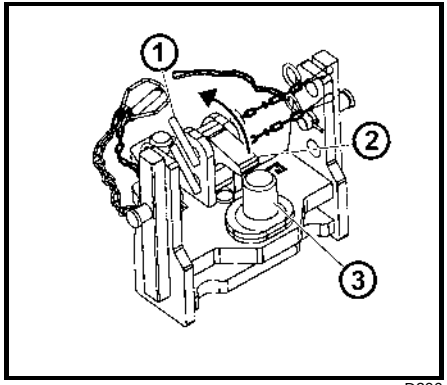

D206

MODULE OF SWINGING TOW BAR BRACKET WITH FIXED PIN

Carry out installation and dismantling of the swinging tow bar as described in section ”Swinging tow bar“.

Attachment of the pole eye to the fixed pin (3):
1- Unlock and dismount the pin (1).
2- Lift the locking wedge (2) in direction of the arrow.
3- Attach the pole eye to the fixed pin (3).
4- Reposition the locking wedge (2) to the original position and lock it using the pin (1).

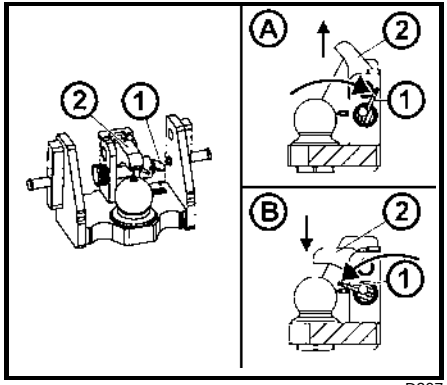

D207

MODULE OF THE BRACKET WITH BALL Ø 80

The bracket with ball ø 80 is used for attaching of trailers with the hitch device designed for balls ø 80.

Unlocking of the hitch, see Fig. (A):
Move of the lever (1) in direction of the arrow slides off the locking wedge (2).

Locking of the hitch, see Fig. (B):
Move of the lever (1) in direction of the arrow slides in the locking wedge (2).

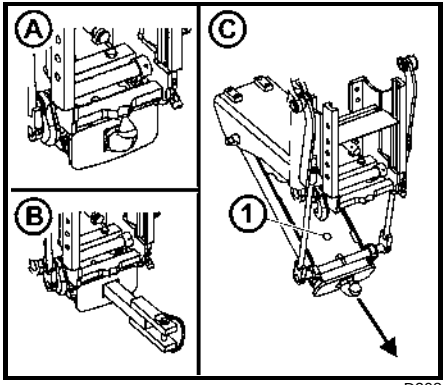

D208

HITCH CBM FOR SINGLE-AXLE TRAILERS

The hitch for single-axle trailers can be equipped with a hook (A) or swinging tow bar (B).

Replacement of the hook of the swinging tow bar (C):

1- Lower the hitch.
2- Unlock and remove the pin (1).
3- Remove the hook in direction of the arrow.

Carry out installation of the swinging tow bar in reverse order.

TRANSPORT USE

MAXIMUM PERMITTED VERTICAL STATIC LOAD OF HITCHES FOR TRAILERS AND SEMI-TRAILERS								
Hitch type	Permitted vertical static load	Hitch pin Ø	Hitch type	Permitted vertical static load	Hitch pin Ø	Hitch type	Permitted vertical static load	Hitch pin Ø
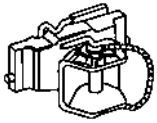	2,000 kg ↓	31 mm	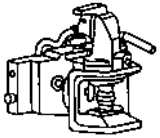	2,000 kg ↓	38 mm	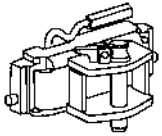	2,000 kg ↓	28 mm
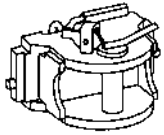	2,000 kg ↓	43 mm	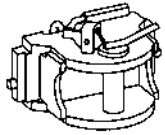	2,000 kg ↓	50 mm			

Maximum weight of the aggregated braked trailer or semi-trailer may not exceed the value indicated on the tractor serial plate and value given in the technical passport (MOT certificate) of the vehicle. Maximum speed of the vehicle combination is given by the maximum permitted speed of the slower vehicle in the combination.

TRANSPORT USE

MAXIMUM PERMITTED VERTICAL STATIC LOAD OF HITCHES FOR TRAILERS AND SEMI-TRAILERS								
Hitch type	Permitted vertical static load	Hitch pin (ball) Ø	Hitch type	Permitted vertical static load	Hitch pin (ball) Ø	Hitch type	Permitted vertical static load	Hitch pin (ball) Ø
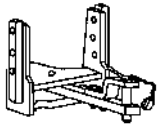	736 kg ↓	31 mm	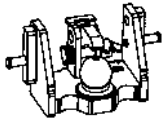	2,000 kg ↓	80 mm	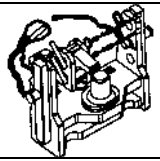	Fixed pin 2,000 kg ↓	44.5 mm
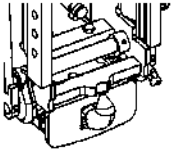	3,000 kg ↓	47 mm	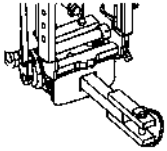	1,200 kg ↓				

Maximum weight of the aggregated braked trailer or semi-trailer may not exceed the value indicated on the tractor serial plate and value given in the technical passport (MOT certificate) of the vehicle. Maximum speed of the vehicle combination is given by the maximum permitted speed of the slower vehicle in the combination.

DRIVE OF AGRICULTURAL MACHINES

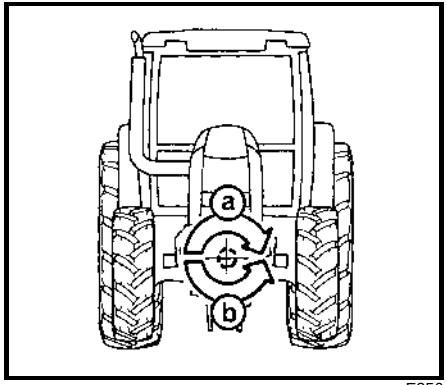

E356

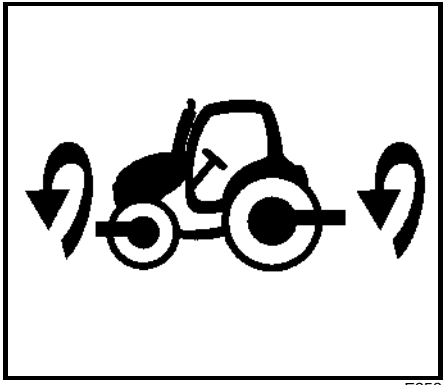

E358

FRONT OUTPUT SHAFT ZUIDBERG

The front output shaft is equipped with a fixed 21-groove terminal and speed only 1,000 min^{-1}.

The tractor may be equipped optionally with a front output shaft with both directions of rotation:

- **a -** In direction of rotation of the engine (standard)
- **b -** Against direction of rotation of the engine (∗ optional)

MAXIMUM TRANSFERRED POWER

Output shaft	Transferred power
front (Zuidberg)	
1,000 min^{-1}	45 kW*
rear	
1000 min^{-1}	engine full power
540 min^{-1}	engine full power
540E min^{-1}	engine full power

*In case of a transfer of power without any surges, the value may be increased to 50 kW

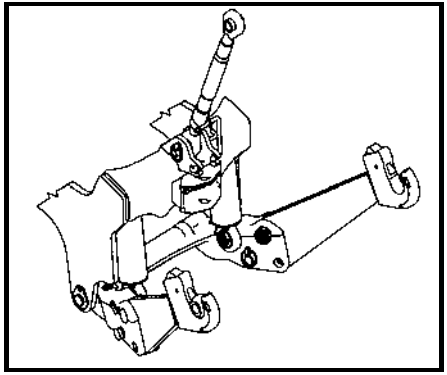

E461

*FRONT 3-POINT HITCH

It is designed to attaching of front-carried agricultural machines and tools according to ISO 8759-2.

When transporting carried tools, it is always necessary to lock the hitch in the lifted position hydraulically by valves on the left side of the tractor, above its front axle.

This hydraulic locking is recommended even in case that there is not attached any machine to the 3-point hitch.

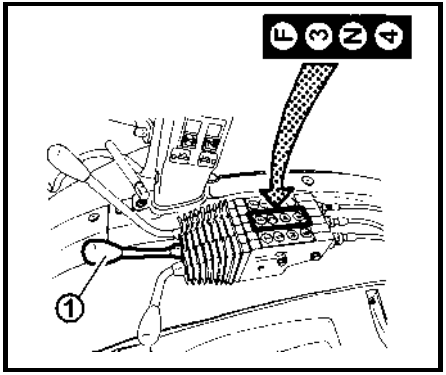

F_02_209

FRONT 3-POINT HITCH CONTROL

The hitch is equipped with two single-acting hydraulic cylinders with supply of oil from the additional hydraulic distributor. Lifting and lowering is executed using the additional distributor control lever (1):

Position 6	lifting
Position 5	lowering
position N	locking of hitch

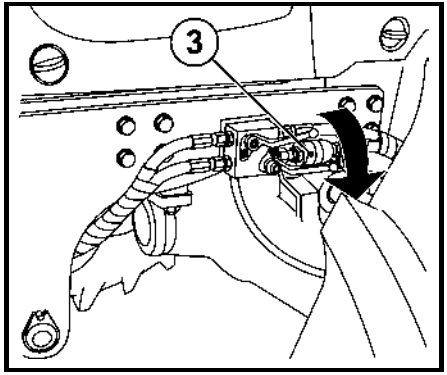

E463

ADJUSTMENT OF SPEED OF LIFTING OF THE FRONT 3-POINT HITCH

Before commencement of work with tools attached to the front 3-point hitch it is recommended to adjust the throttling valve (3) so that the time necessary for lowering of tools from the highest to the lowest position is 1 to 1.5 sec. When turning the valve body counterclockwise (in direction of the arrow) the lowering speed increases. When adjusting the valve, the levers of the front hitch valves shall be horizontal.

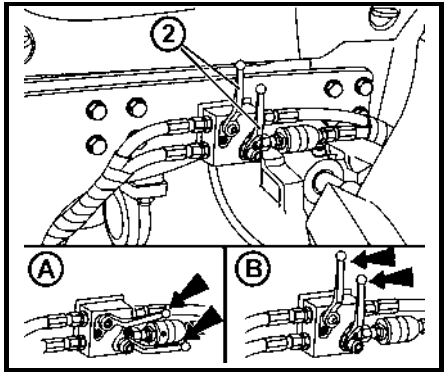

E461

HYDRAULIC LOCKING OF FRONT 3-POINT HITCH

Hydraulic locking of the front 3-point hitch can be carried out in any position of the hydraulic cylinders, using valves in the front part of the tractor (2).

A Free position
Valve levers are in horizontal position; the hitch can be controlled from the cab

B Locked position
Valve levers are in vertical position; the hitch is locked

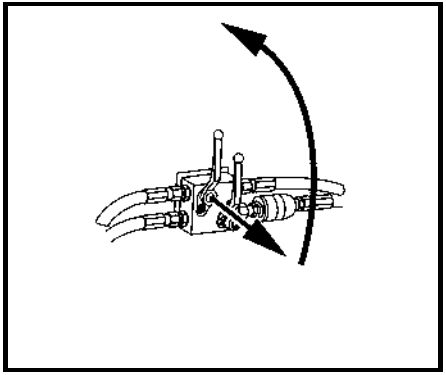

The upper lever of the front 3-point hitch hydraulic lock id fitted with arrestment. Before moving the upper lever to another position, unlock the lever by pulling it out of the hydraulic lock valve body.

Carry out locking or unlocking of the front 3-point hitch always using both levers!

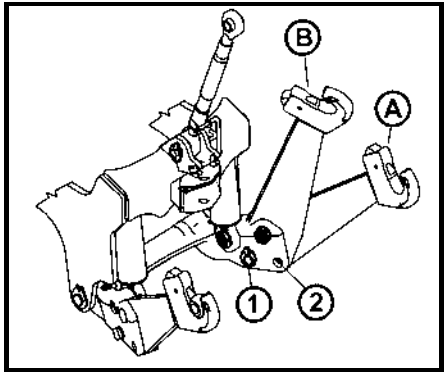

E466

WORKING AND TRANSPORT POSITIONS OF FRONT 3-POINT HITCH

A Working position of the front 3-point hitch

B Transport position of the front 3-point hitch

Change of position of the front 3-point hitch pull rods:

1. Unlock and remove the pin (1) from the hole.
2. Lift the arm from position (A) to position (B).
3. Lock the arm by insertion of the pin to the hole (2) and lock the pin.

Insert only pins into the holes; never check the holes by fingers!

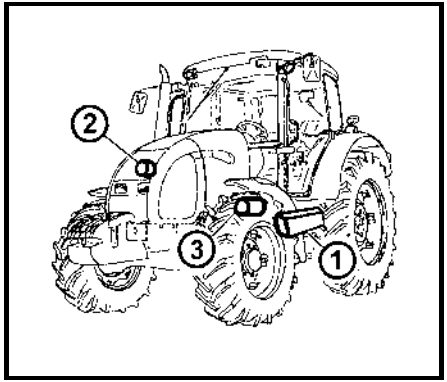

D301

ELECTRIC SET

Nominal voltage Grounded minus (-) pole	12V
Battery (1)	
12V / 155Ah	12V
Alternator with built-in voltage regulator (2)	
14V / 95A	
Starter with reducer (3)	
12V / 3kW	
Vee belts of alternator and water pump drive	
AVX10x1385Laservice	

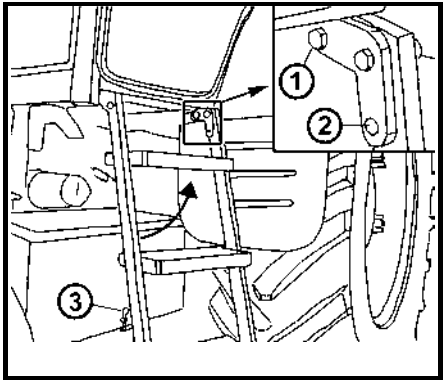

D305

LEAD BATTERY

The lead battery is installed under a cover on the left side of the tractor, under the cab footboard.
The battery is accessible after lifting off the cab footboard.

When lifting off the cab footboard, it is necessary to have the cab door closed.

1- Remove the screw (1)
2- Lift the footboard in direction of the arrow.
3- Secure the lifted footboard with a screw in the footboard hole (2).
4- Remove the safety catch (3).
5- Hold the cover at the lower edge, lift and remove it.

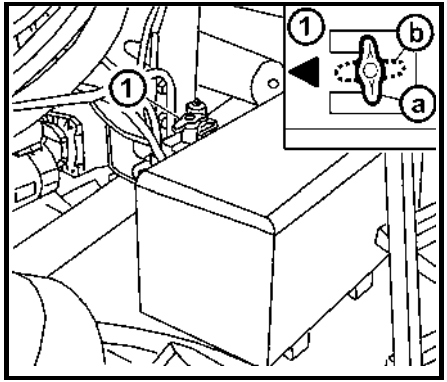

D302

BATTERY DISCONNECTOR

The battery disconnector (1) is located on the left side of the tractor, close to the starter.

a- Battery connected
b- Battery disconnected

When parking the tractor, disconnect the battery using its disconnector (1). This stops permanent minimum power withdrawal of the warning lights interrupter (approx. 10mA). In case the tractor is put aside for a longer period, it is necessary to recharge the battery at least every three months due to battery self-discharging.

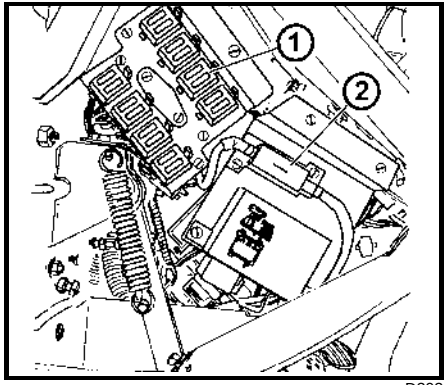

D303

FUSE DOSE (17 FUSES)

It is accessible after removal of the steering console left cover.
The fuses (1) are knife type and should be replaced only for fuses with the same rating. In case of repeated blowing seek the nearest service shop.
The fuse of glowing (2) is a strip type with rating 80A.

∗ - Optional accessories.
1) Used with installation of independent control of working lights on the cab roof.

Location of the fuses in the fuse dose	Pos.	Fuse rating	Protected system
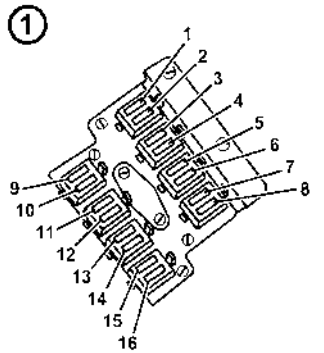	1	15A	Interrupter of warning lights Stop lights
	2	15A	Horn Output 30 of start breaker relay
	3	15A	Front driving axle, differential lock, front output shaft with indicators, relay “3“ of differential lock, dashboard power supply, service socket
	4	15A	High beams with indicator
	5	15A	Left side marker lights Registration plate lights
	6	15A	Right side marker lights Working lights with indicator
	7	15A	Right low beam Fog light with indicator
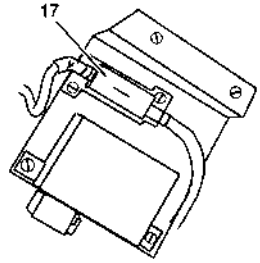	8	15A	Left low beam, indicator of light on the tractor mask / roof
	9	15A	Front and rear wipers, washer Relay “4“
	10	15A	Heating fan, relays “5“ and “6“
	11	15A	Reserve
	∗12	7,5A	A/C (compressor clutch)
	∗13	15A	Heating of mirrors
	∗14	15A	Heating of rear window
	∗15	15A	Compressor of driver’s seat
	16 [1])	15A	Lights in the tractor roof [1])
D304	17	80A	Glowing

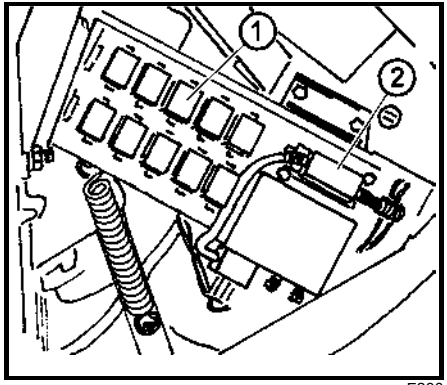

F306

FUSE DOSE (21 FUSES)

It is accessible after removal of the steering console left cover.
The fuses (1) are knife type and should be replaced only for fuses with the same rating. In case of repeated blowing seek the nearest service shop.
The fuse of glowing (2) is a strip type with rating 80A.

∗ - Optional accessories.

Location of the fuses in the fuse dose	Pos.	Fuse rating	Protected system
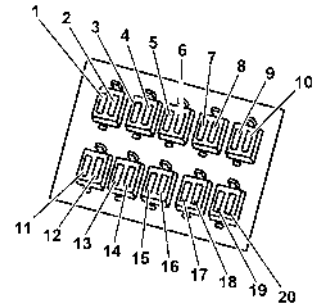	1	15A	Interrupter of warning lights Stop lights
	2	15A	Horn, beacon
	3	15A	Front driving axle control, differential control, dashboard power supply, rear output shaft control, multiplier control, EHR control
	4	15A	High beams with indicator
	5	15A	Left side marker lights, dashboard illumination, registration plate lights
	6	15A	Right side marker lights, rear working light with indicator
	7	15A	Right low beam, fog light with indicator
	8	7,5A	Left low beam, indicator of light on the tractor mask / roof
	9	15A	Additional lights on the roof
	10	3A	Front output shaft Zuidberg
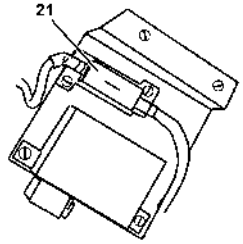 D307	11	15A	Front and rear wipers, washer, radio “15“
	12	20A	Heating fan, radio “30“
	13	15A	Recirculation, lighter
	∗14	7,5A	A/C (compressor clutch)
	∗15	15A	Heating of mirrors
	∗16	15A	Heating of rear window
	∗17	15A	Compressor of driver’s seat
	18	20A	3-pin socket
	∗19	15A	Front working lights on the roof
	∗20	15A	Rear working lights on the roof
	21	80A	Glowing

OILS FOR 4-CYLINDER TURBO-CHARGED ENGINES OF Z 8641 TO Z 12441			TAB. 1
Producer	**Commercial name of oil**	**Viscosity class SAE**	**Power class API**
ÖMV	Truck M plus	15W/40	CF-4/SG
	Truck FE plus	10W/40	CF-4
	Truck FE	10W/40	CE/SG
	Austrotrac	10W/30	CE
	Truck LD	15W/40	CE
	RME Plus	15W/40	CE/SG
Paramo Pardubice	M7ADS III-Trysk	20W/40	SF/CD+
	M7ADS III-Trysk Super	15W/40	SG/CE
	M7ADS IV-Trysk Super Turbo	15W/40	SG/CF-4
Shell	Rimula X	15W/40	SG/CF-4
Aral	Multi Turboral	15W/40	CF-4/SH
	Super Traktoral	10W/30	CD-CE/SF
Koramo Kolín	Mogul Diesel DTT Plus	10W/40	CF-4/SG
	Mogul Traktol STOU	10W/30	CE/SF
Fuchs	Plantmot (bio-oil)	5W/40	CD/SG
	Titan Hydramot 1040MC	10W/40	CD/SG
	Titan Truck	15W/40	CG4

RECOMMENDED OILS FOR TURBO-CHARGED ENGINES ACCORDING TO AMBIENT TEMPERATURE		
Ambient temperature	**Viscosity class SAE**	**Power class API**
Less than -7 °C	10W/30 10W/40	CD+, CE, CF-4
+30°C to -7 °C	15W/30 15W/40 20W/30 20W/40	CD+, CE, CF-4
More than +30 °C	20W/30 20W/40 20W/50	CD+, CE, CF-4

OILS FOR GEARBOXES OF Z 8641 TO Z 12441			TAB. 2
Producer	**Commercial name of oil**	**Viscosity class SAE**	**Power class API**
Paramo Pardubice	Gyrol - UTTO	80W	GL-4
	Gyrol - PP80	80W	GL-4
Esso	Torque Fluid 62	80W	GL-4 •
Koramo Kolín	Mogul Trans 80	80W	GL-4
	Mogul Traktol UTTO/EKO	80W	GL-4 ••
Aral	EP 80	80W	GL-4
	Fluid HGS	80W	GL-4 •
	Super Traktoral	10W/30	GL-4 ••
ÖMV	Austromatic HGN	80W	GL-4
	Getriebeol MP	80W - 85W	GL-4
Shell	Donax TT	80W	
	Spirax GX 80W	80W	GL- 4
Fuchs	Titan Hydramot 1030MC	10W/30	GL-4 ••

• - Additive oil with additive for differential, with limited slipping and wet brakes

•• - Universal oil

OILS FOR FRONT OUTPUT SHAFTS ZUIDBERG **TAB. 3**

Producer	Commercial name of oil	Interval of oil replacement
BP	Autran DX III	Every 450 Mh (engine operation hours)
	Fluid 9	
Shell	Donax TX	
Esso	ATF E 25131	
Castrol	Transmax S	
Elf	Elfmatic G2 Syn	
	Elfmatic G3	
FINA	Finamatic HP	
	Finamatic S6726	
Mobil	Mobil ATF	
Texaco	Texamatic 7045	
Valvoline	ATF Dextron II-E	
Beverol	Dextron II-E	
	(Fina)matic HP	
JD	Hygard JDMJ 20C	
Total	Fluide AT42	
	Fluidematic Syn	

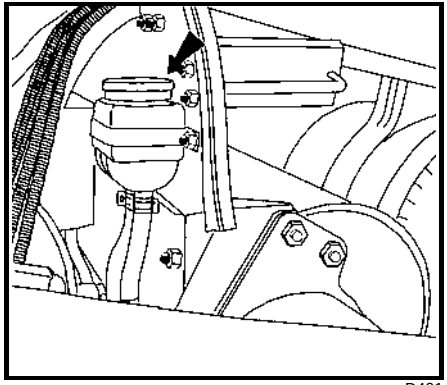

D401

REFILLING OF BRAKE FLUID

The tank is accessible after removal of the right rear bonnet side.
Keep the brake fluid level between 3/4 of the tank capacity (max.) and 1/2 of the tank capacity (min.).

When handling with brake fluid pay special attention to cleanness. Check the brake fluid level before each drive.

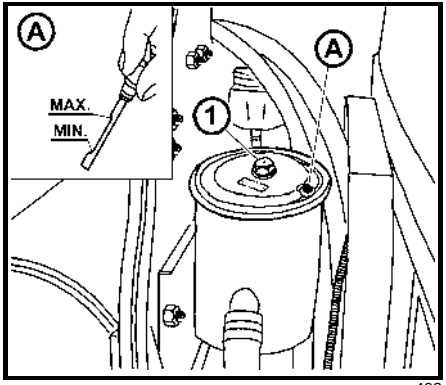

402

OIL TANK OF HYDROSTATIC STEERING

The tank is accessible after removal of the right rear bonnet side.
Using the oil-gauge rod (A) check level of oil in the hydrostatic steering tank; keep the level between the marks MIN. and MAX., see Fig. (A).
After removing the nut (1) and tank lid refill oil as necessary.

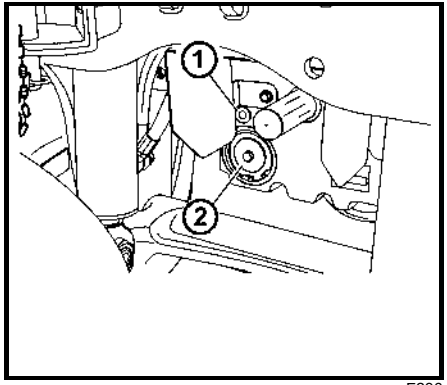

F206

FRONT OUTPUT SHAFT

The oil check and refilling plug (1) is located on face of the front output shaft box.
In case of a front output shaft with standard direction of rotation the oil check and refilling plug is replaced for a hollow screw of the oil cooler hose. Perform check after removal of the hollow screw.

After removing the check plug the oil level shall reach the check hole lower edge.

When replacing oil, clean the strainer oil cleaner (2). It is accessible after removal of the lock ring and lid.

ESSENTIAL TECHNICAL PARAMETERS

TECHNICAL SPECIFICATIONS OF ENGINES OF TRACTORS Z 11741.4C, Z 9641, Z 10641, Z 11441, Z 12441						
Type of tractor		**Z 11741.4C**	**Z 9641**	**Z 10641**	**Z 11441**	**Z 12441**
Type of engine		**Z 1504**	**Z 1005**	**Z 1305**	**Z 1405**	**Z 1505**
Engine		compression ignition, 4-stroke cycle, direct fuel injection, turbo-charged				
Engine design		in-line, vertical, water-cooled				
Number of cylinders		4				
Stroke volume	cm^3	4156				
Bore x stroke	mm	105 x 120				
Nominal speed	rpm	2200				
Order of injection		1-3-4-2				
Compression ratio		17				
Max. override speed	rpm	2460				
Idle speed	rpm	750 ± 25	800 ± 25	800 ± 25	800 ± 25	800 ± 25
Net power at nominal speed, measured according to ECE R24	kW	90	66	74	81	90
Specific fuel consumption at the given power	$g.kW^{-1}.h^{-1}$	256	254	254	257	255
Max. torque (Mt)	Nm	525			480	525
Excess of Mt	%	35	38	37	35	35
Lubrication of engine		Pressure system with pump Gerotor				
Max. consumption of oil after 100 Mh of engine running-in	$g.kW^{-1}.h^{-1}$	0.7				
Pressure of oil at engine nominal speed and temperature of oil 80 °C	MPa	0.2 ÷ 0.5				
Minimum pressure of oil at 750 rpm and oil temperature 80 °C	MPa	0.05				
Max. temperature of cooling fluid	C°	106				
Valve mechanism		OHV				
Oil cleaner		Full-flow, disposable				

ESSENTIAL TECHNICAL PARAMETERS

Technical specifications of engines of tractors Z 11741.4C, Z 9641, Z 10641, Z 11441, Z 12441						
Type of tractor		**Z 11741.4C**	**Z 9641**	**Z 10641**	**Z 11441**	**Z 12441**
Type of engine		**Z 1504**	**Z 1005**	**Z 1305**	**Z 1405**	**Z 1505**
Fuel cleaner		single-stage with replaceable cartridge				
Type of injection pump		PP4M10P1i-3765	PP4M10P1i-3775	PP4M10P1i-3776	PP4M10P1i-3767	PP4M10P1i-3766
Type of nozzle		DOP150s526-4150	DO150s428-4104	DOP150s428-4104	DOP150s526-4150	DOP150s526-4150
Opening pressure of injectors	MPa	25-08	25-08	25-08	25-08	25-08
Angle of advanced injection	°	9+1	12	12	9+1	9+1
Valve play of cold engine - inlet valve - exhaust valve	 mm mm	 0.25 ± 0.05 0.25 ± 0.05				

ESSENTIAL TECHNICAL PARAMETERS

FORCES (KN) AND POWERS (KW) – ENGINES TIER II	Type of tractor				
	Z 8641	Z 9641	Z 10641	Z 11441	Z 11741.4C
Type of engine (TIER II)	Z 1204	Z 1004	Z 1304	Z 1404	Z 1504
Power on output shaft (kW ± 2%) at engine nominal speed and engaged 1,000 rpm of output shaft					
Engine not run-in (up to 100 Mh)	48.4	53.6	60.8	66.5	73.9
Run-in engine (more than 100 Mh)	51.0	56.5	64.0	70.0	77.8
Maximum tractive force on swinging tow bar (kN) - on concrete with tractor in standard design, ready to drive, with max. weight of additional weights with slipping 15% and driver in the cab	31.9	34.3	37.2	38.9	43
Maximum tractive force on multi-storey hitch for trailer (kN) - In hitch middle position, on concrete with tractor in standard design, ready to drive, with max. weight of additional weights, water in tyres and driver in the cab	35.6	37.8	42.3	44.2	47.7
Lifting force at end of lower pull rods of the 3-point hitch, within full stroke, at max. usable pressure, with auxiliary cylinder (kN)	48.4				
Lifting force at end of lower pull rods of the front 3-point hitch, within full stroke, at max. usable pressure (kN)	24				

ESSENTIAL TECHNICAL PARAMETERS

FORCES (KN) AND POWERS (KW) – ENGINES TIER III	Type of tractor			
	Z 9641	Z 10641	Z 11441	Z 12441
Type of engine (TIER III)	Z 1005	Z 1305	Z 1405	Z 1505
Power on output shaft (kW ± 2%) at engine nominal speed and engaged 1,000 rpm of output shaft				
Engine not run-in (up to 100 Mh)	53.6	60.8	66.5	73.9
Run-in engine (more than 100 Mh)	56.5	64.0	70.0	77.8
Maximum tractive force on swinging tow bar (kN) - on concrete with tractor in standard design, ready to drive, with max. weight of additional weights with slipping 15% and driver in the cab	34.3	37.2	38.9	43
Maximum tractive force on multi-storey hitch for trailer (kN) - In hitch middle position, on concrete with tractor in standard design, ready to drive, with max. weight of additional weights, water in tyres and driver in the cab	37.8	42.3	44.2	47.7
Lifting force at end of lower pull rods of the 3-point hitch, within full stroke, at max. usable pressure, with auxiliary cylinder (kN)	48,4			
Lifting force at end of lower pull rods of the front 3-point hitch, within full stroke, at max. usable pressure (kN)				
Front 3-point hitch Zetor	24			
Front 3-point hitch Zuidberg	35			

ESSENTIAL TECHNICAL PARAMETERS

SPEED OF THE FRONT OUTPUT SHAFT ZUIDBERG		
Direction of rotation	**Speed of the front output shaft/engine speed**	**Speed of the front output shaft/engine speed**
right-hand (a)	1,000 / 1,920	1,146 / 2,200
∗left-hand (b)	1,000 / 2,000	1,100 / 2,200

∗ – optional

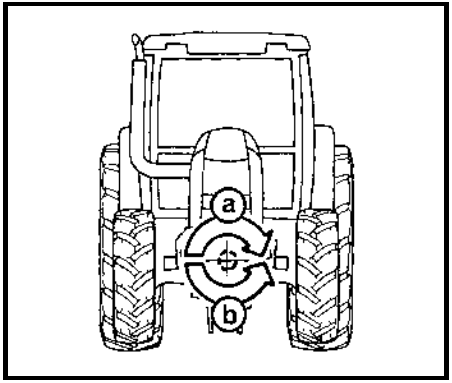

E801

ESSENTIAL TECHNICAL PARAMETERS

VALUES FOR TRACTORS Z 11741.4C AND Z 12441

Unless given otherwise in this supplement, the values for types of tractors Z11441, given in the “Instructions Manual”, are also applicable for types of tractors Z 11741.4C and Z 12441.

INDEX

INDEX

Supplement of Instruction Manual
for tractors
Z 8641 Forterra
Z 9641 Forterra
Z 10641 Forterra
Z 11441 Forterra
Z 11741.4C Forterra
Z 12441 Forterra

Issue: 2-100-2007
Publication no.: 22.22.12.432
Zetor Tractors a.s.
Department of technical documentation
Trnkova 111
632 00 Brno

Zetor